ADDENDUM NO. 02
TO THE
BIDDING REQUIREMENTS AND CONTRACT DOCUMENTS
FOR THE
NEW ALBANY UPHILL RUN LIFT STATION PROJECT

OWNER: City of New Albany
142 East Main Street
New Albany, IN 47150

ISSUED BY/ENGINEER: Beam, Longest and Neff, L.L.C.
8320 Craig Street
Indianapolis, Indiana 46250

ISSUED TO: All Plan and Specifications Holders of Record

ISSUE DATE: November 8, 2021

BID DATE: November 10, 2021

This Addendum No. 02, consisting of 2 pages, shall clarify, correct, or change the Bidding Requirements or the proposed Contract Documents. This Addendum is a part of the Bidding Requirements and the proposed Contract Documents and shall govern in the performance of the Work.

PART 1 - PROJECT MANUAL - NONE

PART 2 - DRAWINGS

2.1 ELECTRICAL DRAWINGS

1. Sheets E-01 through E-05 have been updated – revision are clouded for reference.
2. Sheets E-06 through E-12 have been updated and replaced entirely for clarity.

PART 3 - ADDITIONAL TECHNICAL INFORMATION - NONE

Except as modified by this Addendum and other Addenda, the Bidding Requirements and the proposed Contract Documents shall remain unchanged. You will receive no other notification of this Addendum. **RECEIPT OF THIS ADDENDUM MUST BE ACKNOWLEDGED IN SECTION 00410 - BID FORM, PAGE 00410-1.**

PETER RANDAL WAMSLEY
REGISTERED
No.
11300326
STATE OF
INDIANA
PROFESSIONAL ENGINEER

11/8/21

CERTIFIED BY: Peter Wamsley

Peter Wamsley, P.E.
Registered P.E. No. 11300326
State of Indiana

Encls.: Sheets E-01 through E-12

PROJECT LOCATION
SCALE: 1" = 300'

N

DRAWING INDEX

SHT. NO.	DESCRIPTION
E-01	LOCATION PLAN AND DRAWING INDEX
E-02	EXISTING LIFT STATION ELECTRICAL DEMO PLAN
E-03	ELECTRICAL SITE PLAN
E-04	PUMP STATION ELECTRICAL PLAN
E-05	ELECTRICAL ONE-LINE DIAGRAM
E-06	PLC PUMP CONTROL PANEL DETAILS
E-07	PUMP CONTROL PANEL POWER WIRING DIAGRAM
E-08	PUMP CONTROL PANEL POWER WIRING DIAGRAM
E-09	PUMP CONTROL PANEL WIRING DIAGRAM
E-10	PUMP CONTROL PANEL POWER WIRING DIAGRAM
E-11	ELECTRICAL DETAILS
E-12	ELECTRICAL DETAILS

BLN
BEAM·LONGEST·NEFF
8126 Castleton Road, Indianapolis, IN 46250
Phone: 317.913.4383
www.blnfirm.com
Fax: 317.913.4383

REVISIONS AND ISSUES	DATE	BY
1. UPDATED LOGO, SHEET SIZE, ADDED BMP, DIMENSIONS, ADDED DETAIL, DIMENSIONS, REPLACED E-01	11-05-2021	BBD

JOSEPH W. SIMS
REGISTERED
NO
PE60860165
STATE OF
INDIANA
PROFESSIONAL ENGINEER

Joseph W Sims

UPHILL RUN LIFT
STATION PROJECT
200 Commercial St. Nashville, IN. 47448
CITY OF NEW ALBANY WASTEWATER
38 W. 10th STREET, NEW ALBANY, INDIANA 47150
LOCATION PLAN AND DRAWING INDEX

PLAN DATE:
NOVEMBER 8, 2021
DESIGN: CHECK: DRAWN:
PROJECT NO.
2018167
SHEET NO.
E-01

GENERAL ELECTRICAL NOTES:

A. EXISTING CONDITION INFORMATION PROVIDED ON THIS DRAWING WAS OBTAINED BY SITE VISIT OBSERVATIONS AND FROM ORIGINAL CONSTRUCTION DRAWINGS WHEN AVAILABLE. CONTRACTOR SHALL VERIFY THE SCOPE OF WORK BY SITE INSPECTION PRIOR TO BIDDING. THIS DRAWING SHALL BE CONSIDERED INCOMPLETE AND USED FOR REFERENCE ONLY.

B. EXISTING CONDUIT MAY NOT BE REUSED. ALL OBSOLETE CONDUIT, SUPPORTS, BOXES, ETC. SHALL BE COMPLETELY REMOVED.

C. ALL DEVICES, EQUIPMENT, ETC. SHOWN ON THIS DRAWING TO BE REMOVED COMPLETE UNLESS NOTED OTHERWISE. REMOVE ALL ASSOCIATED CONDUIT AND WIRING COMPLETE TO SOURCE. THE OWNER SHALL HAVE FIRST RIGHT OF REFUSAL FOR ALL EQUIPMENT THAT IS REMOVED.

ELECTRICAL KEYED NOTES:

1. DISCONNECT AND REMOVE EXISTING PUMP CONTROL PANEL AND ASSOCIATED CONDUIT AND WIRING COMPLETE.
2. DISCONNECT AND REMOVE EXISTING RTU PANEL FOR RE-USE. INSTALL AT NEW LOCATION.
3. DISCONNECT AND REMOVE EXISTING ANTENNA FOR RE-USE. INSTALL AT NEW LOCATION.
4. DISCONNECT AND REMOVE EXISTING OMNISITE AND ASSOCIATED WIRING AND CONDUIT COMPLETE.
5. REMOVE EXISTING STATIC PHASE CONVERTER AND ASSOCIATED WIRING AND CONDUIT COMPLETE.
6. DISCONNECT AND REMOVE EXISTING 200A DOUBLE THROW SAFETY SWITCH AND ASSOCIATED WIRING AND CONDUIT COMPLETE.
7. DISCONNECT AND REMOVE EXISTING 200A SAFETY SWITCH AND ASSOCIATED WIRING AND CONDUIT COMPLETE.
8. DISCONNECT AND REMOVE EXISTING ELECTRICAL EQUIPMENT AND ASSOCIATED WIRING AND CONDUIT COMPLETE.

BLN
BEAM·LONGEST·NEFF
9100 Carefree Road, Indianapolis, IN 46205
Phone: 317.845.5552
www.BLN.cn.com
Fax: 317.841.4281

REVISIONS AND ISSUES	DATE	BY
1 ADDED DETAIL, VOID AN ORIGINAL MOTOR CONTROL DRAWN, REVISED E-13	11-08-2021	MW

JOSEPH W. SIMS
REGISTERED
NO
PE60860165
STATE OF
INDIANA
PROFESSIONAL ENGINEER

Joseph W Sims

UPHILL RUN LIFT STATION PROJECT

200 Commercial St. Nashville, IN. 47448

CITY OF NEW ALBANY WASTEWATER

38 W. 10th STREET, NEW ALBANY, INDIANA 47150

EXISTING LIFT STATION ELECTRICAL DEMO PLAN

PLAN DATE: NOVEMBER 8, 2021

DESIGN: | CHECK: | DRAWN:

PROJECT NO. 2018167

SHEET NO. E-02

GENERAL ELECTRICAL NOTES:

A. CONTRACTOR SHALL COORDINATE ALL REQUIREMENTS FOR NEW SERVICE WITH LOCAL UTILITY. UTILITY CONTACT INFORMATION:
REMC, PHONE: 812-248-7504

B. ALL UNDERGROUND CONDUITS SHALL BE SCH 80 PVC.

C. ALL CONDUITS SWEEPS TO ABOVE GROUND SHALL BE GALVANIZED RIGID STEEL.

D. ALL CONDUITS ABOVE GRADE EXPOSED OUTDOORS SHALL BE RIGID ALUMINUM; COAT CONDUITS WHERE NECESSARY WHERE IN CONTACT WITH EARTH OR CONCRETE.

E. SEE ONE LINE DIAGRAM FOR ADDITIONAL DETAILS AND REQUIREMENTS.

F. PROVIDE LINK SEAL FOR ALL CONDUIT PENETRATIONS INTO LIFT STATION WET WELL.

G. PROVIDE STAINLESS STEEL HARDWARE FOR ALL EQUIPMENT INSTALLED IN WET WELL; THIS INCLUDES BUT NOT LIMITED TO KELLUM'S CABLE GRIPS, CABLE RACKS, MOUNTING BRACKETS, BOLTS AND NUTS.

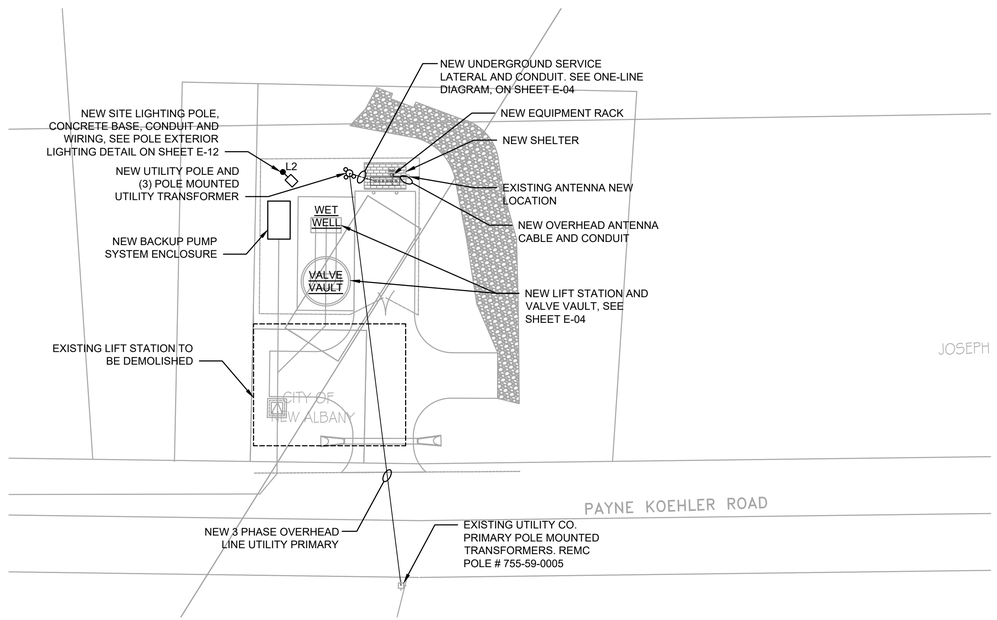

ELECTRICAL SITE PLAN

SCALE: 1" = 20'-0" WHEN PLOTTED FULL SIZE (24" X 36")

N

0 10' 20'

BLN BEAM·LONGEST·NEFF

7000 Clearwin Road, Indianapolis, IN 46250
Phone: 317.845.0832
www.BLN.com
Fax: 317.841.4251

DATE	BY	REVISIONS AND ISSUES
11-08-2021	DBB	CHANGE LIGHTING, ADD UPS, UNDERGROUND, ADDED DIAGRAM, CHANGE SHEET E-12

JOSEPH W. SIMS
REGISTERED
NO
PE60860165
STATE OF
INDIANA
PROFESSIONAL ENGINEER

Joseph W Sims

UPHILL RUN LIFT STATION PROJECT

200 Commercial St. Nashville, IN. 47448

CITY OF NEW ALBANY WASTEWATER

38 W. 10th STREET, NEW ALBANY, INDIANA 47150

ELECTRICAL SITE PLAN

PLAN DATE: NOVEMBER 8, 2021

DESIGN: CHECK: DRAWN:

PROJECT NO. 2018167

SHEET NO. E-03

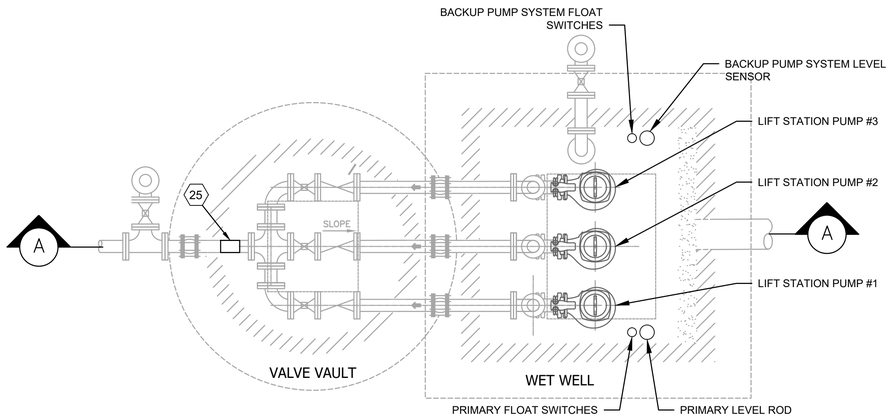

WET WELL AND VAULT PLAN - BELOW COVER

SCALE: 1/2" = 1'-0" WHEN PLOTTED FULL SIZE (24" X 36")

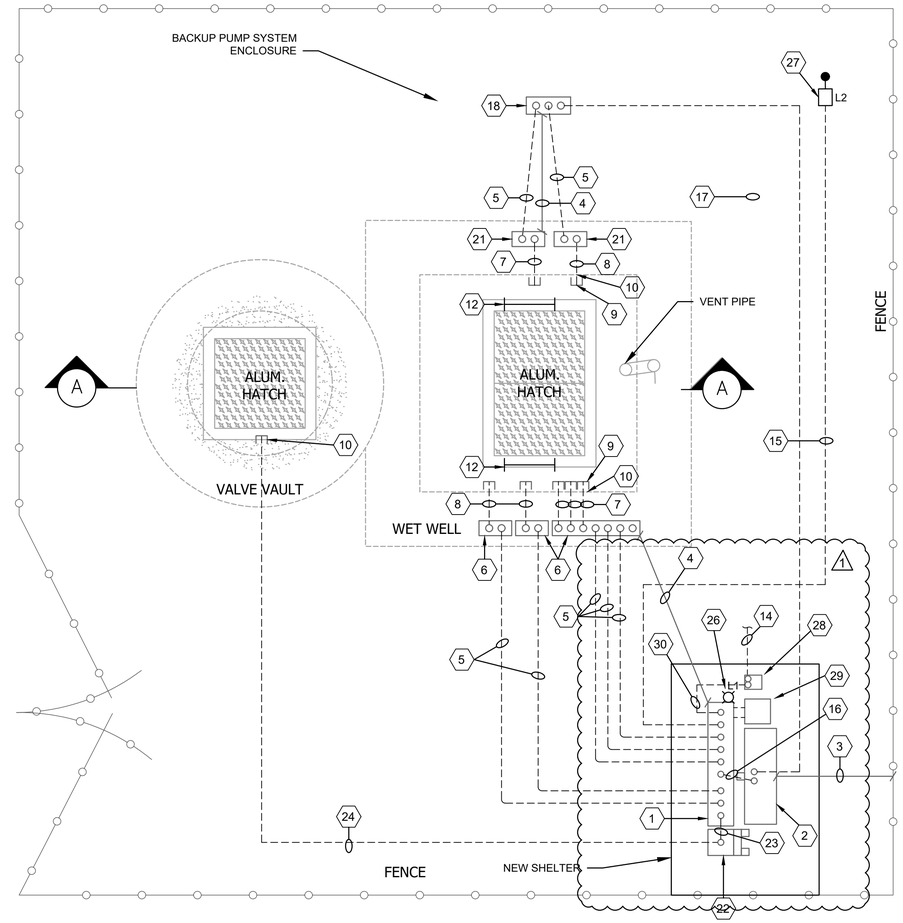

WET WELL AND VAULT PLAN - AT GRADE

SCALE: 1/2" = 1'-0" WHEN PLOTTED FULL SIZE (24" X 36")

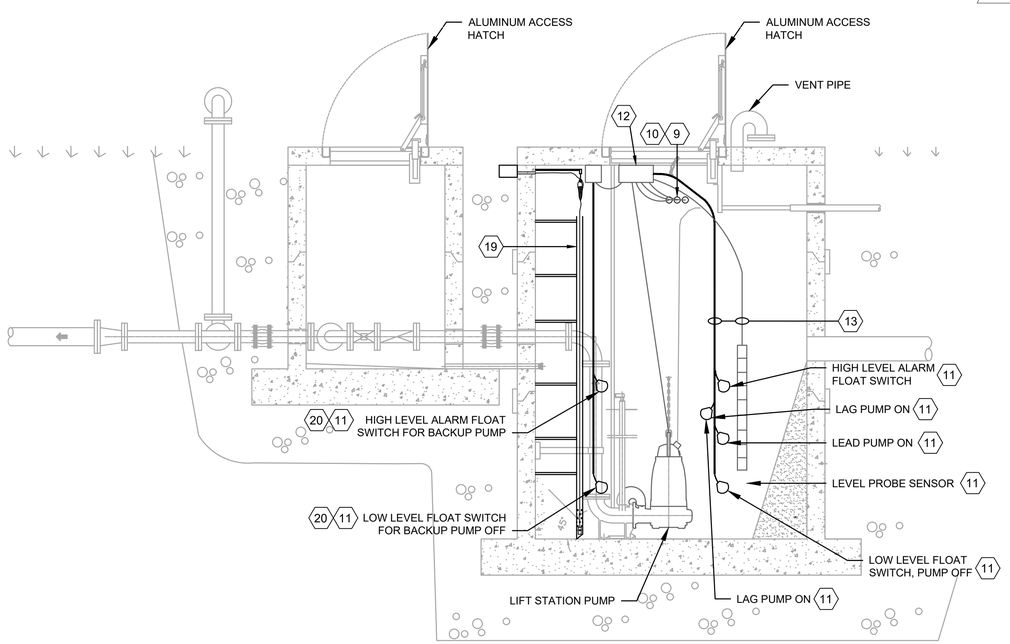

SECTION "A"

SCALE: 1/2" = 1'-0" WHEN PLOTTED FULL SIZE (24" X 36")

GENERAL ELECTRICAL NOTES:

A. WET WELL IS CLASS 1 DIVISION 2 GROUP D - ALL WIRING METHODS AND DEVICES MUST COMPLY WITH NEC HAZARDOUS ENVIRONMENT MEANS AND METHODS.

ELECTRICAL KEYED NOTES:

1. NEW MOTOR CONTROL PANEL. SEE SHEET STARTING E-6.
2. RELOCATED RTU PANEL AND NEW NEMA 4X JUNCTION BOX ON SUPPORT RACK, SEE RTU PANEL MOUNTING DETAIL ON SHEET E-12.
3. MAINTAIN MIN. OF 3' CLEARANCE FROM EQUIPMENT TO FENCE.
4. PROVIDE 5' MINIMUM CLEARANCE.
5. UNDERGROUND POWER WIRING, CONTROL WIRING, AND CONDUITS TO CONTROL PANEL; SEE ONE-LINE DIAGRAM.
6. NEW VENTED TERMINAL BOX; SEE DETAIL #1 ON SHEET E-11.
7. UNDERGROUND PUMP CABLE AND CONDUIT.
8. UNDERGROUND CONTROL WIRING AND CONDUIT.
9. TERMINATE CONDUIT WITH BUSHING. TYPICAL.
10. PROVIDE LINK SEAL FOR ALL WET WELL CONDUIT PENETRATIONS. TYPICAL.
11. SEE LIFT STATION DETAIL ON CIVIL PLAN FOR ELEVATIONS.
12. CONTRACTOR SHALL PROVIDE STAINLESS STEEL MOUNTED HARDWARE, J HOOKS AND KELLEMS GRIPS. INSTALL NEAR ACCESS HATCH.
13. SECURE CABLES TO STRUCTURE EVERY 5' MINIMUM.
14. UNDERGROUND CONDUIT TO METER ON SERVICE UTILITY SERVICE POLE.
15. UNDERGROUND POWER WIRING AND CONDUIT TO POLE LIGHT.
16. UNDERGROUND CONDUIT AND WIRING TO NEW NEMA 4X JUNCTION BOX.
17. UNDERGROUND CONDUIT TO NEMA 4X JUNCTION BOX FOR BACKUP PUMP.
18. NEW BACKUP PUMP CONTROL PANEL. PART OF SYSTEM SKID; LOCATED IN ENCLOSURE.
19. NEW SUBMERSIBLE LEVEL SENSOR IN STILLING TUBE FOR BACKUP PUMP SYSTEM; SEE DETAIL ON SHEET E-11.
20. NEW BACKUP FLOAT SWITCHES FOR BACKUP PUMP SYSTEM.
21. NEW VENTED TERMINAL BOX; SEE DETAIL #2 ON SHEET E-11.
22. NEW FLOW INDICATOR TRANSMITTER (FIT). CONTRACTOR SHALL FURNISHED AND INSTALLED NEW STAINLESS STEEL RACK. PROVIDE SUN SHIELD.
23. UNDERGROUND CONDUIT FROM FLOW INDICATOR TRANSMITTER (FIT) TO CONTROL PANEL.
24. UNDERGROUND INSTRUMENT CABLE AND CONDUITS TO FLOW METER.
25. NEW ELECTROMAGNETIC FLOW METER. SEE MOUNTING DETAIL ON SHEET E-12.
26. WET LOCATION LED CANOPY LIGHT FIXTURE LITHONIA OLCFM OR EQUAL APPROVAL.
27. NEW POLE MOUNTED LIGHT; SEE DETAIL ON SHEET E-11.
28. NEW SERVICE FUSED DISCONNECT SWITCH.
29. NEW MINI POWER ZONE.
30. NEW 480V 3PH 4W FEEDER.

BLN BEAM·LONGEST·NEFF
8330 Castleton Road, Indianapolis, IN 46250
Phone: 317.845.5832
www.BLN.Net
Fax: 317.841.4281

REVISIONS AND ISSUES:	DATE	BY
LABELED FLOW SWITCH, ADDED AND DIMENSIONS, ADDRESS CONTROL ORDERS, REMOVED E-13.	11-10-2021	DWC

JOSEPH W. SIMS REGISTERED NO PE60860165 STATE OF INDIANA PROFESSIONAL ENGINEER

Joseph W Sims

UPHILL RUN LIFT STATION PROJECT

200 Commercial St. Nashville, IN. 47448

CITY OF NEW ALBANY WASTEWATER

38 W. 10th STREET, NEW ALBANY, INDIANA 47150

PUMP STATION ELECTRICAL PLAN

PLAN DATE: NOVEMBER 8, 2021

DESIGN: CHECK: DRAWN:

PROJECT NO. 2018167

SHEET NO. E-04

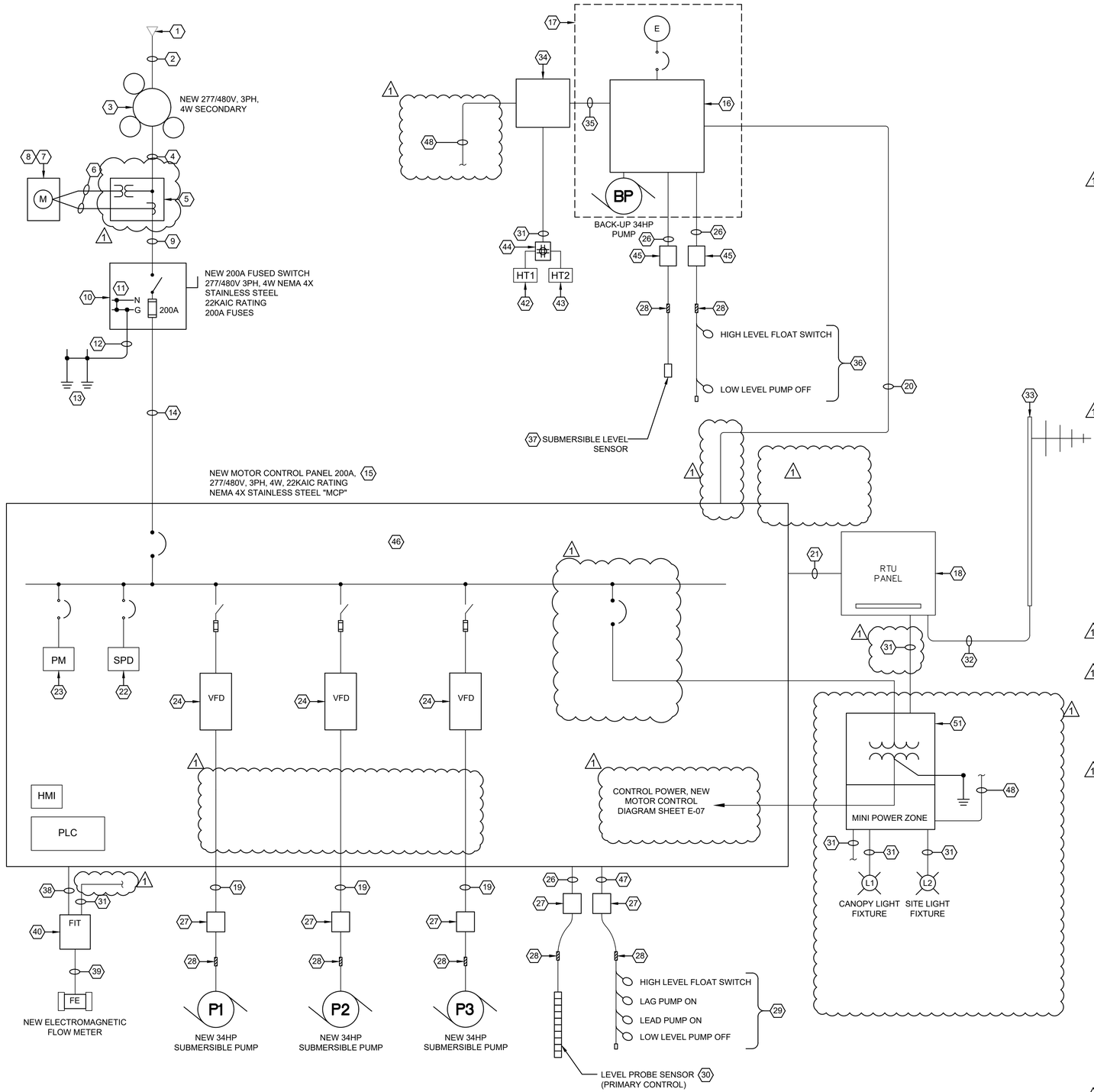

LIFT STATION ONE-LINE DIAGRAM

SCALE: NONE

CONDUIT REQUIREMENT NOTES:

A. PROVIDE SCH 80 PVC CONDUITS FOR ALL CONDUITS INSTALLED UNDERGROUND.

B. PROVIDE RIGID ALUMINUM CONDUITS FOR ALL OUTDOOR CONDUITS ABOVE FINISHED GRADE AT EQUIPMENT RACK. COAT CONDUITS WHERE IN CONTACT WITH EARTH OR CONCRETE.

C. PROVIDE RGS CONDUIT TRANSITIONS FROM BELOW GRADE TO ABOVE GRADE.

GENERAL ELECTRICAL NOTES:

A. WET WELL IS CLASS 1 DIVISION 1 GROUP D - ALL WIRING METHODS AND DEVICES MUST COMPLY WITH NEC HAZARDOUS ENVIRONMENT MEANS AND METHODS.

ELECTRICAL KEYED NOTES:

1. EXISTING ELECTRICAL UTILITY CO. PRIMARY LINE.
2. NEW 3-PHASE OVERHEAD LINE UTILITY PRIMARY.
3. NEW POLE AND POLE MOUNTED TRANSFORMERS, BY UTILITY. 277/480V, 3PH, 4 WIRE SYSTEM.
4. NEW SERVICE LATERAL WIRING PROVIDED BY CONTRACTOR. 4-#3/0 CU, 4"C. COORDINATE WITH UTILITY.
5. CTs TO BE LOCATED AT TRANSFORMER SECONDARY NEAR TOP OF POLE BY UTILITY.
6. INSTRUMENTATION WIRING BY UTILITY; CONTRACTOR SHALL PROVIDE 2" C.
7. METER BASE FURNISHED AND INSTALLED BY CONTRACTOR; COORDINATE REQUIREMENTS WITH UTILITY. METER BASE TO BE MOUNT ON POLE.
8. METER FURNISHED AND INSTALLED BY UTILITY.
9. 4-#3/0 CU, 2-1/2" C.
10. NEW FUSED SWITCH TO BE MOUNTED ON CONTROL RACK.
11. BOND NEUTRAL TO GROUND AT THIS LOCATION ONLY.
12. #4 BARE CU GROUND ELECTRODE CONDUCTOR, 3/4"C.
13. (2) 3/4" DIAM. x 10' LENGTH COPPER CLAD GROUND ROD.
14. 4-#3/0 CU, 1-#6 CU GND, 2-1/2" C.
15. NEW MOTOR CONTROL PANEL FURNISHED AND INSTALLED BY CONTRACTOR.
16. BACKUP ENCLOSURE DRIVEN PUMP CONTROL PANEL.
17. BACKUP PUMP DIESEL ENGINE SYSTEM.
18. RELOCATE EXISTING RTU AT NEW LIFT STATION. SEE SHEET E-12 FOR ADDITIONAL INFORMATION.
19. 3-#2 XHHW-2 CU, 1-#8 CU GND, 1-1/2" C.
20. NOT AUTO, 2-#14 CU, COMMON ALARM, 2-#14 CU, WEAK BATTERY, 2-#14 CU, LOW FUEL, 2-#14 CU, ENGINE RUNNING, 2-#14 CU, 1-#14 CU GND, 2" C.
21. ALARM AND MONITORING SIGNALS FROM PUMP CONTROL PANEL TO TELEMETRY PANEL, 28 - #14 CU, 1 1/2 " C. SEE SHEET E-10.
22. INTEGRAL SURGE PROTECTION DEVICE.
23. POWER MONITOR DEVICE
24. PROVIDE ULTRA LOW HARMONIC VARIABLE FREQUENCY DRIVE (VFDs).
25. NOT USED.
26. LEVEL PROBE CABLE IN 2" C.
27. NEW VENTED TERMINAL BOX; SEE DETAIL #1 ON SHEET E-11.
28. J-HOOKS, KELLEMS GRIPS, MOUNTING BRACKETS, AND STAIN RELIEF DEVICE, STAINLESS STEEL.
29. FLOAT SWITCHES FURNISHED AND INSTALLED BY CONTRACTOR.
30. LEVEL PROBE SENSOR FURNISHED AND INSTALLED BY CONTRACTOR, EQUAL TO MULTITRODE XYLEM OR APPROVED EQUAL.
31. 2-#12 CU, 1-#12 CU GND, 3/4" C.
32. INSTALL EXISTING, RELOCATED LMR-400 ANTENNA CABLE IN 2" C. TO RTU PANEL.
33. EXISTING POLE MOUNTED ANTENNA SHALL BE RELOCATED BY CONTRACTOR.
34. NEW NEMA 4X STAINLESS STEEL JUNCTION BOX FOR POWER.
35. POWER WIRING AND CONDUITS MULTIPLE CIRCUITS.
36. FLOAT SWITCHES FURNISHED BY MANUFACTURER AND INSTALLED BY CONTRACTOR.
37. SUBMERSIBLE LEVEL SENSOR FURNISHED BY MANUFACTURER AND INSTALLED BY CONTRACTOR. EC SHALL FURNISH AND INSTALL STILLING TUBE, SEE DETAIL ON SHEET E-11.

SUBMERSIBLE LEVEL TRANSMITTER NOT USED. REMOVE...

38. 4-20MA ANALOG SIGNAL, FLOW, TSP #16, 3/4" C.
39. INSTRUMENT CABLE, FURNISHED WITH FLOW METER, INSTALLED IN 2" C. BY CONTRACTOR.
40. FLOW INDICATOR TRANSMITTER FURNISHED AND INSTALLED BY CONTRACTOR.
41. NOT USED.
42. NEW HEAT TAPE SYSTEM FOR SUCTION PIPING. SELF REGULATING CHROMALOX HAZARDOUS AREA TYPE HSRL OR APPROVED EQUAL.
43. NEW HEAT TAPE SYSTEM FOR DISCHARGE PIPING. SELF REGULATING CHROMALOX HAZARDOUS AREA TYPE HSRL OR APPROVED EQUAL.
44. NEW WP/GFI QUAD RECEPTACLE WITH IN USE COVER FOR HEAT TAPE.
45. NEW VENTED TERMINAL BOX; SEE DETAIL #2 ON SHEET E-11.
46. SEE SHEETS E-06 THRU E-11 FOR ADDITIONAL DETAILS.
47. 8-#14 CU, 1-#14 CU GND, 3/4" C.
48. BACKUP PUMP SYSTEM BLOCK HEATER 2-#12 CU, 1-#12 CU GND, BACKUP PUMP SYSTEM BATTERY CHARGER, 2-#12 CU, 1-#12 CU GND, BACKUP PUMP SYSTEM CONTROL POWER, 2-#12 CU, 1-#12 CU GND, HEAT TRACE CIRCUIT, 2-#12 CU, 1-#12 CU GND, 1" C. PROVIDE 3-#12 SPARES.
49. NOT USED.
50. NOT USED.
51. MINI POWER ZONE; 7KVA, 480V:120/240V, 1PH TRANSFORMER. 60A PANELBOARD WITH MCB. NEMA 3R STAINLESS STEEL.

BLN BEAM·LONGEST·NEFF
8330 Castleton Road, Indianapolis, IN 46250
Phone: 317.841.5532
Fax: 317.841.4281
www.BLN.Net

REVISIONS AND ISSUES	DATE	BY
LIMITED BIDS (WATER, WWTP, AND SYNCHRONIZE WWTP CONTROL ORDERS, REMARKS E-13)	11-15-2021	DWD

JOSEPH W. SIMS REGISTERED NO PE60860165 STATE OF INDIANA PROFESSIONAL ENGINEER

Joseph W Sims

UPHILL RUN LIFT STATION PROJECT

200 Commercial St. Nashville, IN. 47448

CITY OF NEW ALBANY WASTEWATER

38 W. 10th STREET, NEW ALBANY, INDIANA 47150

ELECTRICAL ONE-LINE DIAGRAM

PLAN DATE: NOVEMBER 8, 2021

DESIGN: | CHECK: | DRAWN:

PROJECT NO. 2018167

SHEET NO. E-05

KEYED NOTES:

1. NEMA NEMA4X STAINLESS STEEL 72"X72"X24" ENCLOSURE. FOR REFERENCE, SAGINAW CONTROL & ENGINEERING (SCE) SCE-72EL7224SSLPPL IS SHOWN. FINAL ENCLOSURE SIZING BY PANEL FABRICATOR.
2. 72"X72" EQUIPMENT PANEL.
3. DEAD FRONT PANELS, SCE-DF72EL72.
4. 24" LED LIGHT, DOOR ACTIVATED SWITCH.
5. MAPLE SYSTEMS 12" HMI.
6. AIR CONDITIONER SIZED APPROPRIATELY FOR THIS ENCLOSURE. SCE SERIES 3600 IS SHOWN AND HAS A BUILT-IN HEATER FOR CONDENSATION CONTROL. IF AN ALTERNATE AC UNIT IS APPROVED, A CONDENSATION UNIT HEATER SHALL BE ADDED.
7. PTT RED LED PILOT LIGHT FOR FAIL/FAULT.
8. PTT GREEN LED PILOT LIGHT FOR RUN STATUS.
9. 3-POSITION H-O-A SWITCH.
10. 2-POSITION MODE SELECT SWITCH.
11. MOTOR PROTECTION RELAYS. FLUSH MOUNT WITH RESET. COORDINATE WITH PUMP MANUFACTURER TO PROVIDE CORRECT UNITS. TYPICALLY PROVIDED WITH PUMPS, THIS MUST BE CONFIRMED. IF FLUSH MOUNT MINICAS MODULES ARE NOT PROVIDED AND SOCKET DIN RAIL MOUNT ARE, THEN A PUSHBUTTON FOR RESET AND PILOT LIGHTS FOR SEAL FAIL AND OVERTEMP SHALL BE PROVIDED.
12. VFD REMOTE KEYPAD. REMOTE KEYPAD SHALL BE USED TO PROGRAM OR OPERATE THE DRIVE. KEYPAD SHALL BE SET NORMALLY TO THE AUTO POSITION TO OPERATE. ONCE ALL DRIVE PARAMETERS HAVE BEEN SETUP TO OPERATE NORMALLY, BACKUP PARAMETERS WITHIN THE KEYPAD FUNCTION.
13. 120V CONTROL RELAYS. QUANTITY AS REQUIRED BY PANEL FABRICATOR FINAL DESIGN.
14. SINGLE POLE SUPPLEMENTAL CIRCUIT BREAKERS. SEE WIRING DETAILS.
15. CONTROL PANEL DOOR PILOT DEVICE INTERFACE TERMINAL BLOCKS.
16. 3 POLE CIRCUIT BREAKER FOR 3 PHASE POWER MONITOR.
17. PHASE FAIL MONITOR.
18. 3 POLE CIRCUIT BREAKER FOR 3 PHASE SURGE PROTECTION DEVICE.
19. 3 PHASE SURGE PROTECTOR. FOR REFERENCE, SQUARE D TVS4HWA50X SHOWN.
20. WIRE DUCT – AS REQUIRED.
21. 2 POLE CIRCUIT BREAKER FOR LOCAL CONTROL POWER TRANSFORMER.
22. ULTRA-LOW HARMONIC (ULH) VFD DRIVES FOR 34HP SUBMERSIBLE PUMPS. ABB ACQ580-31-052A-4 WITH ETHERNET MODBUS TCP/IP SHOWN.
23. NON-METALLIC HOUSING FOR ISB EQUIPMENT.
24. FLOAT SWITCH INTRINSICALLY SAFETY BARRIER SIMILAR TO IDEC EB3C-R05AN.
25. NEMA4X ALARM BEACON.
26. PANEL EARTH GROUND COMMON BLOCK.
27. CIRCUIT BREAKERS FOR MOTOR PROTECTION (TYPICAL). SEE DRAWINGS.
28. MAIN POWER DISTRIBUTION BLOCK.
29. MAIN 3 PHASE POWER FEED CIRCUIT BREAKER.
30. TYPE J FUSE HOLDER FOR VFD LINE SIDE CONNECTION.
31. NOT USED.
32. DUAL CONVERSION UPS FOR PLC AND TELEMETRY PANEL BACKUP.
33. PHENOLIC NAMEPLATES. BLACK LETTERS ON WHITE BACKGROUND.
34. MOTOR ESTIMATED RUNTIME METERS. TYPICAL.
35. 120V CONTROL POWER GROUND DISTRIBUTION BLOCK.
36. 120V CONTROL POWER 1P 20A CIRCUIT BREAKER.
37. 120V CONTROL POWER HOT/NEUTRAL POWER DISTRIBUTION TERMINAL BLOCKS.
38. ALTERNATING RELAY FOR PUMP BACKUP CONTROL.
39. 24VDC POWER SUPPLY PROTECTION CIRCUIT BREAKER.
40. 5A 24VDC REDUNDANT POWER SUPPLIES WITH REDUNDANCY MODULE.
41. NOT USED.
42. ALLEN BRADLEY MICROLOGIX 1400 PLC.
43. ML1400 DIGITAL INPUT CARD.
44. ML1400 ANALOG INPUT CARD.
45. ML1400 ANALOG OUTPUT CARD.
46. PLC DIGITAL INPUT FIELD TERMINATION BLOCKS.
47. PLC DIGITAL OUTPUT ISOLATION RELAYS.
48. PLC ANALOG INPUT/OUTPUT TERMINATION BLOCKS. 3 LEVEL WITH SIGNAL GROUND.
49. MULTITRODE EIC MODULE.
50. FIELD TERMINATION BLOCKS FOR MOTOR PROTECTION SEAL FAIL AND OVERTEMP SENSOR CABLES.
51. UNMANAGED ETHERNET SWITCH.
52. FIELD DEVICE RELAYS TO SPLIT CRITICAL ALARM SIGNALS TO PLC AND TELEMETRY ALARM SERVICE.

SCOPE OF WORK NOTES:

PUMP CONTROL PANEL IS FOR A TRIPLEX LIFT STATION. ONLY 2 PUMPS WILL OPERATE AT A TIME WITH THE THIRD BEING A STANDBY. ALTERNATE LEAD/LAG USING ALL THREE PUMPS.

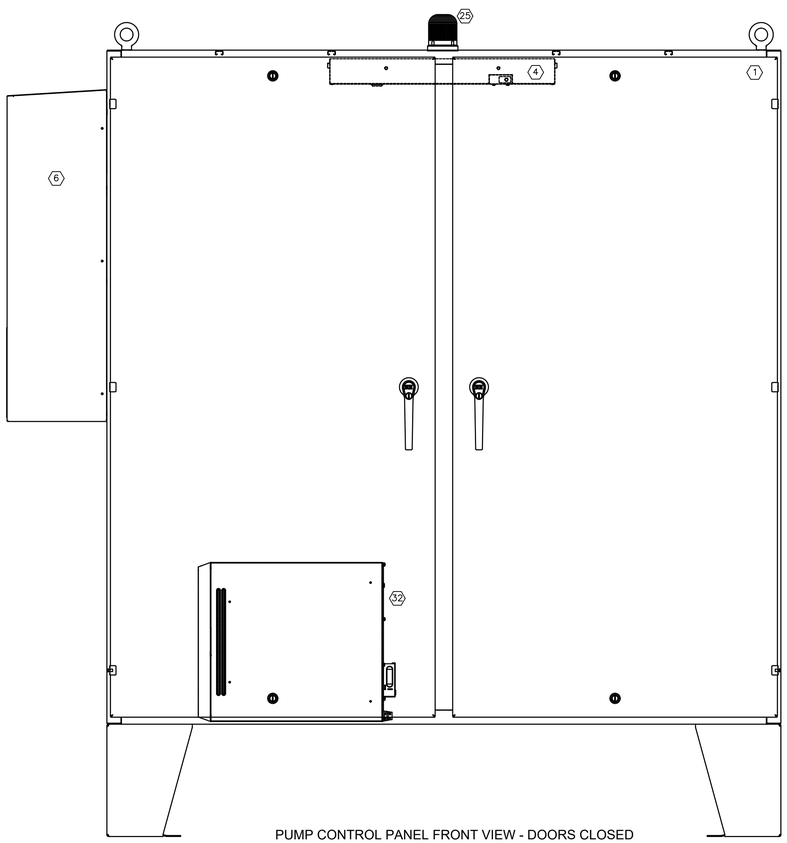

PUMP CONTROL PANEL FRONT VIEW - DOORS CLOSED

NOT TO SCALE

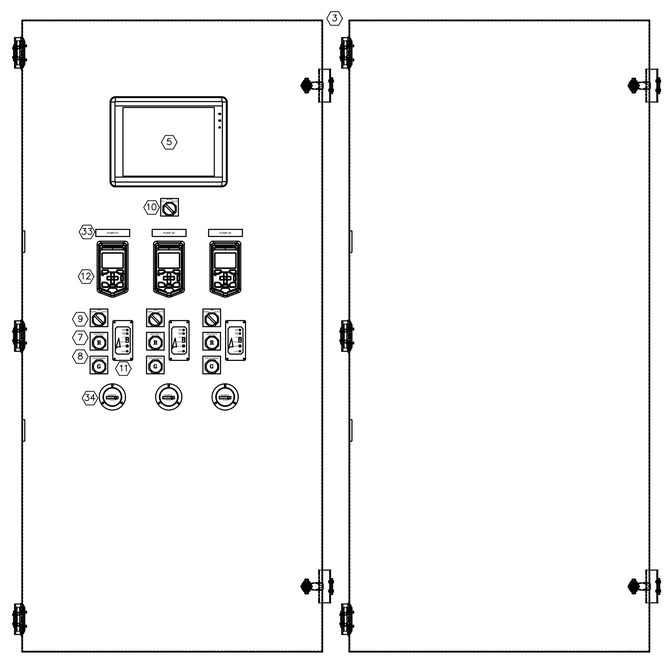

PUMP CONTROL PANEL EQUIPMENT PANEL DETAIL

NOT TO SCALE

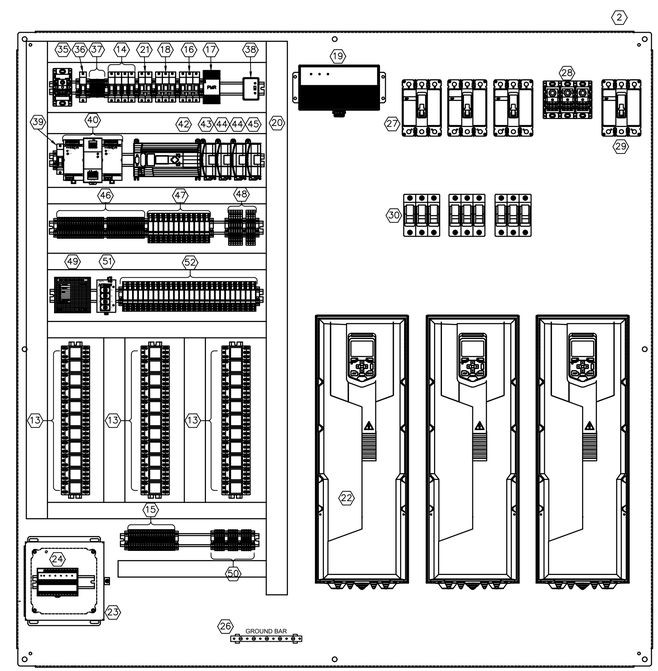

PUMP CONTROL PANEL EQUIPMENT PANEL DETAIL

NOT TO SCALE

SCOPE OF WORK NOTES:

THE PANEL LAYOUT SHOWN IS INTENDED TO ESTABLISH THE SCOPE OF WORK AND EXPECTATIONS. FINAL LAYOUT AND DETAILS SHALL BE THE RESPONSIBILITY OF THE MOTOR CONTROL PANEL FABRICATOR. SUBMIT SHOP DRAWINGS FOR REVIEW.

PUMP CONTROL PANEL DETAILS

SCALE: NONE

BLN BEAM-LONGEST-NEFF
8100 Castleton Road Indianapolis, IN 46250
Phone: 317.849.5933
www.BLN.Net
Fax: 317.841.4351

REVISIONS AND ISSUES	DATE	BY
CHANGE SIGNAL BETWEEN SCADA AND OPERATOR MODEM CONTROL	11-15-2021	MR

JOSEPH W. SIMS REGISTERED NO PE60860165 STATE OF INDIANA PROFESSIONAL ENGINEER

Joseph W Sims

UPHILL RUN LIFT STATION PROJECT
200 Commercial St. Nashville, IN. 47448
CITY OF NEW ALBANY WASTEWATER
38 W. 10th STREET, NEW ALBANY, INDIANA 47150
PLC PUMP CONTROL PANEL DETAILS

PLAN DATE: NOVEMBER 8, 2021
DESIGN: CHECK: DRAWN:
PROJECT NO. 2018167
SHEET NO. E-06

SCOPE OF WORK NOTES:

THE PANEL LAYOUT SHOWN IS INTENDED TO ESTABLISH THE SCOPE OF WORK AND EXPECTATIONS. FINAL LAYOUT AND DETAILS SHALL BE THE RESPONSIBILITY OF THE MOTOR CONTROL PANEL FABRICATOR. SUBMIT SHOP DRAWINGS FOR REVIEW.

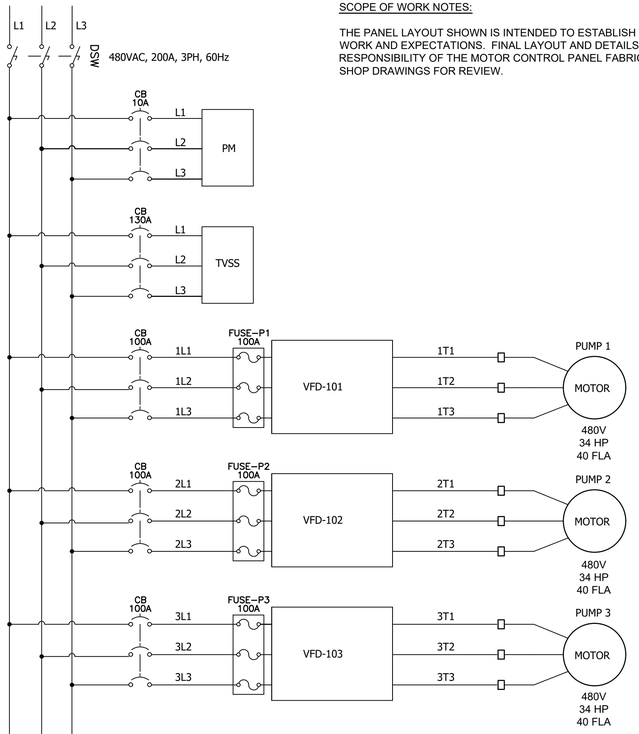

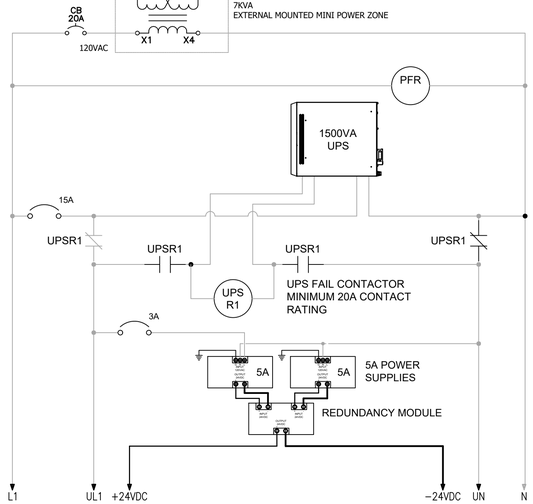

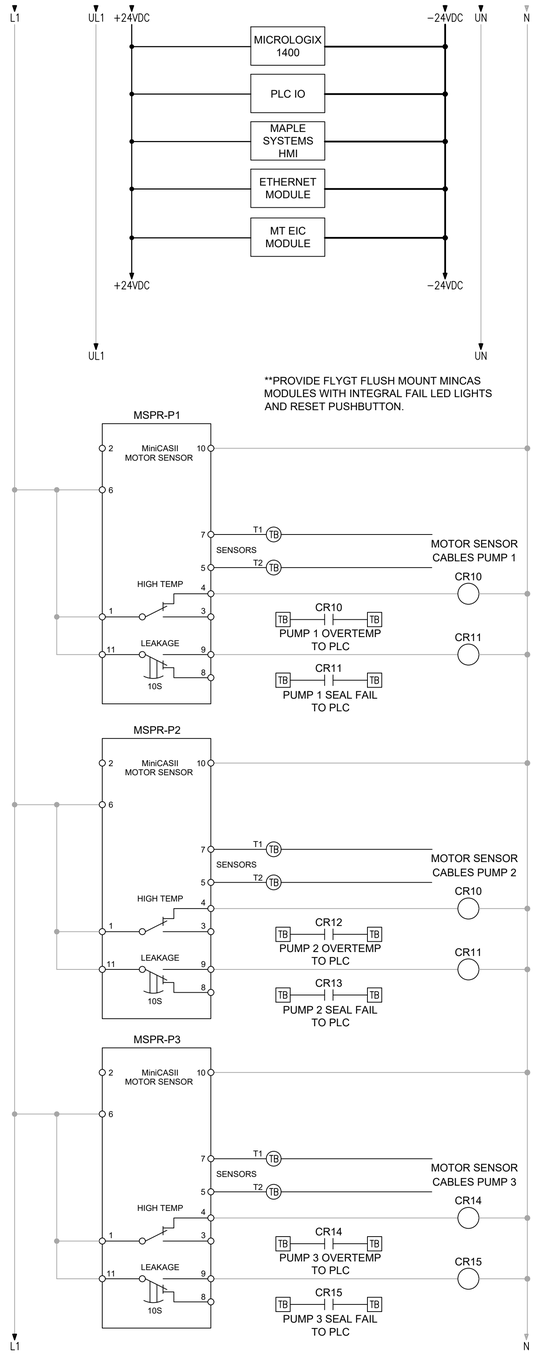

GENERAL POWER FAIL TO PLC

UPS FAILURE TO PLC

QUINT 5A POWER SUPPLY FAILURE TO PLC

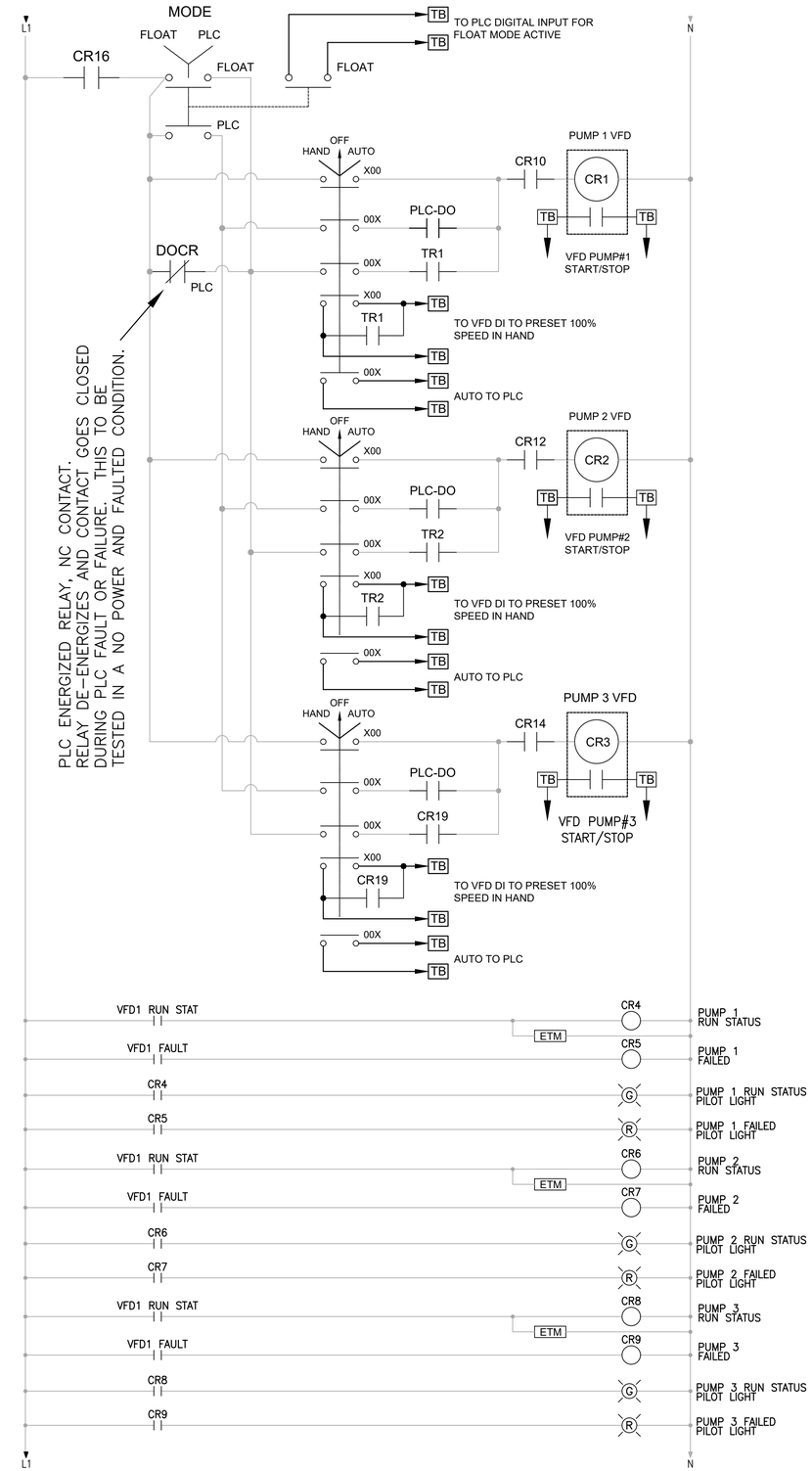

PUMP CONTROL PANEL WIRING DIAGRAM

SCALE: NONE

BLN BEAM-LONGEST-NEFF
www.BLN.com
Fax: 317.841.4281
8126 Castleton Road, Indianapolis, IN 46250
Phone: 317.849.5052

REVISIONS AND ISSUES	DATE	BY
1. UPDATED FIXED INTERNAL ADDED MINI POWERZONE, ADDED E-STOP & CIRCUITS, SEPARATED E-12	11-05-2021	DWD

JOSEPH W. SIMS REGISTERED NO PE60860165 STATE OF INDIANA PROFESSIONAL ENGINEER

Joseph W Sims

UPHILL RUN LIFT STATION PROJECT
200 Commercial St. Nashville, IN. 47448

CITY OF NEW ALBANY WASTEWATER
38 W. 10th STREET, NEW ALBANY, INDIANA 47150

PUMP CONTROL PANEL WIRING DIAGRAM

PLAN DATE: NOVEMBER 8, 2021
DESIGN: CHECK: DRAWN:
PROJECT NO. 2018167
SHEET NO. E-07

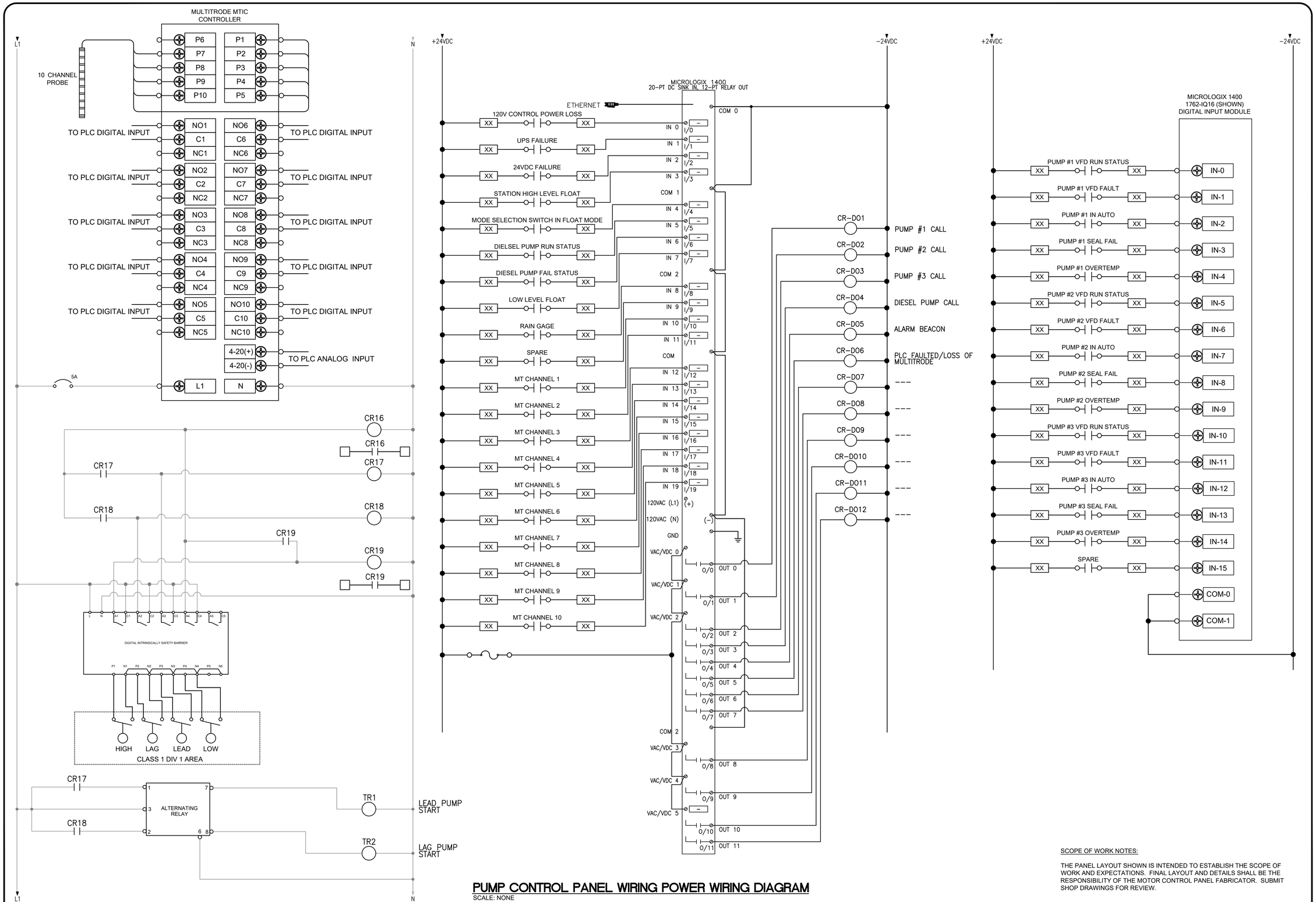

PUMP CONTROL PANEL WIRING POWER WIRING DIAGRAM

SCALE: NONE

SCOPE OF WORK NOTES:

THE PANEL LAYOUT SHOWN IS INTENDED TO ESTABLISH THE SCOPE OF WORK AND EXPECTATIONS. FINAL LAYOUT AND DETAILS SHALL BE THE RESPONSIBILITY OF THE MOTOR CONTROL PANEL FABRICATOR. SUBMIT SHOP DRAWINGS FOR REVIEW.

BLN BEAM·LONGEST·NEFF
www.BLN.com
Fax: 317.844.1285
8126 Castleton Road, Indianapolis, IN 46250
Phone: 317.842.6030

REVISIONS AND ISSUES	DATE	BY
1 MOVED FUSES, SWITCH, ADDED MM, DIMENSIONS, MODIFIED LANDTOOL LOGIC	11-30-2021	MW
2 ADDED SPACE, LOGIC		

JOSEPH W. SIMS REGISTERED NO PE60860165 STATE OF INDIANA PROFESSIONAL ENGINEER

Joseph W Sims

UPHILL RUN LIFT STATION PROJECT

200 Commercial St. Nashville, IN. 47448

CITY OF NEW ALBANY WASTEWATER

38 W. 10th STREET, NEW ALBANY, INDIANA 47150

PUMP CONTROL PANEL WIRING DIAGRAM

PLAN DATE: NOVEMBER 8, 2021

DESIGN: | CHECK: | DRAWN:

PROJECT NO. 2018167

SHEET NO: E-08

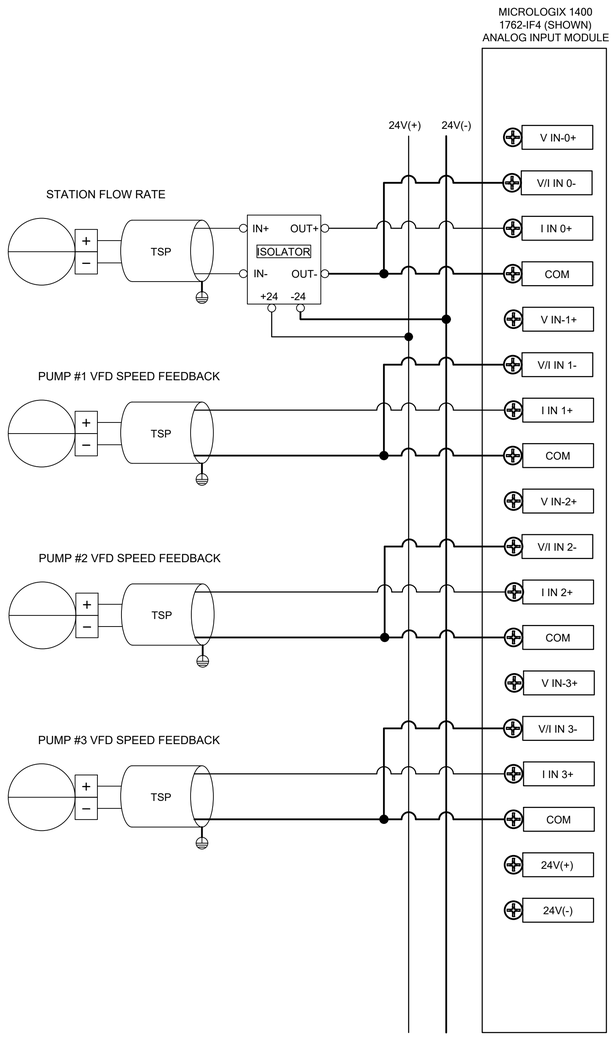

ANALOG INPUT MODULE 1 WIRING DETAIL

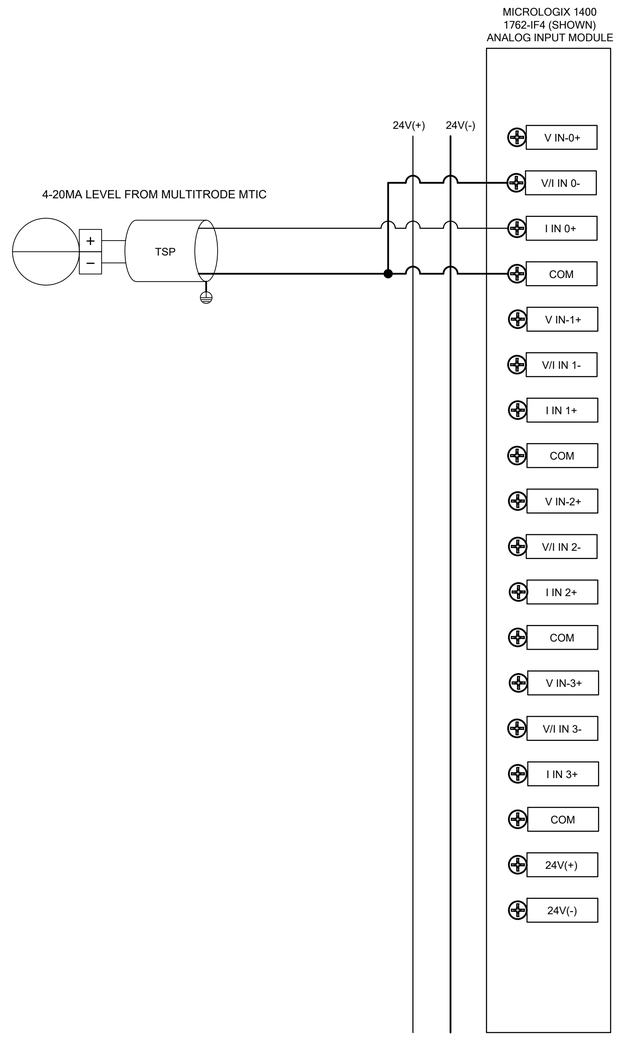

ANALOG INPUT MODULE 2 WIRING DETAIL

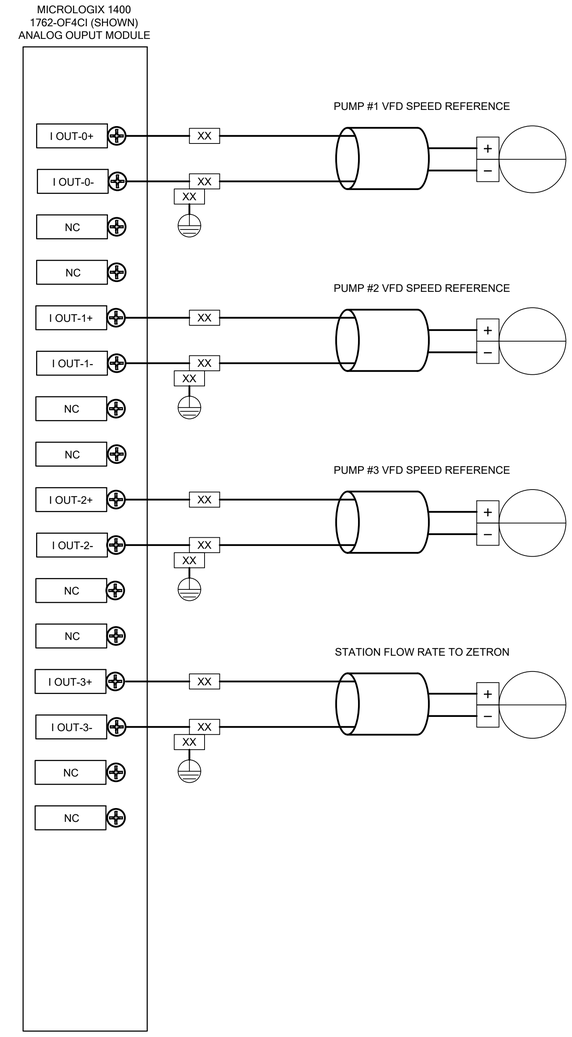

ANALOG OUTPUT MODULE 1 WIRING DETAIL

SCOPE OF WORK NOTES:

THE PANEL LAYOUT SHOWN IS INTENDED TO ESTABLISH THE SCOPE OF WORK AND EXPECTATIONS. FINAL LAYOUT AND DETAILS SHALL BE THE RESPONSIBILITY OF THE MOTOR CONTROL PANEL FABRICATOR. SUBMIT SHOP DRAWINGS FOR REVIEW.

PUMP CONTROL PANEL WIRING DIAGRAM

SCALE: NONE

BLN
BEAM·LONGEST·NEFF
8126 Castleton Road, Indianapolis, IN 46250
Phone: 317.849.5550
www.BLN-PA.com
Fax: 317.841.6291

REVISIONS AND ISSUES	DATE	BY
E-UPDATE, FLOW, SWITCH, ADDED MIN DIMENSIONS, ADDED CONTROL CIRCUITS, REPLACED E-12	11-05-2021	DBC

JOSEPH W. SIMS
REGISTERED
NO
PE60860165
STATE OF
INDIANA
PROFESSIONAL ENGINEER

Joseph W Sims

UPHILL RUN LIFT
STATION PROJECT
200 Commercial St. Nashville, IN. 47448

CITY OF NEW ALBANY WASTEWATER
38 W. 10th STREET, NEW ALBANY, INDIANA 47150

PUMP CONTROL PANEL WIRING DIAGRAM

PLAN DATE: NOVEMBER 8, 2021
DESIGN: CHECK: DRAWN:
PROJECT NO. 2018167
SHEET NO. E-09

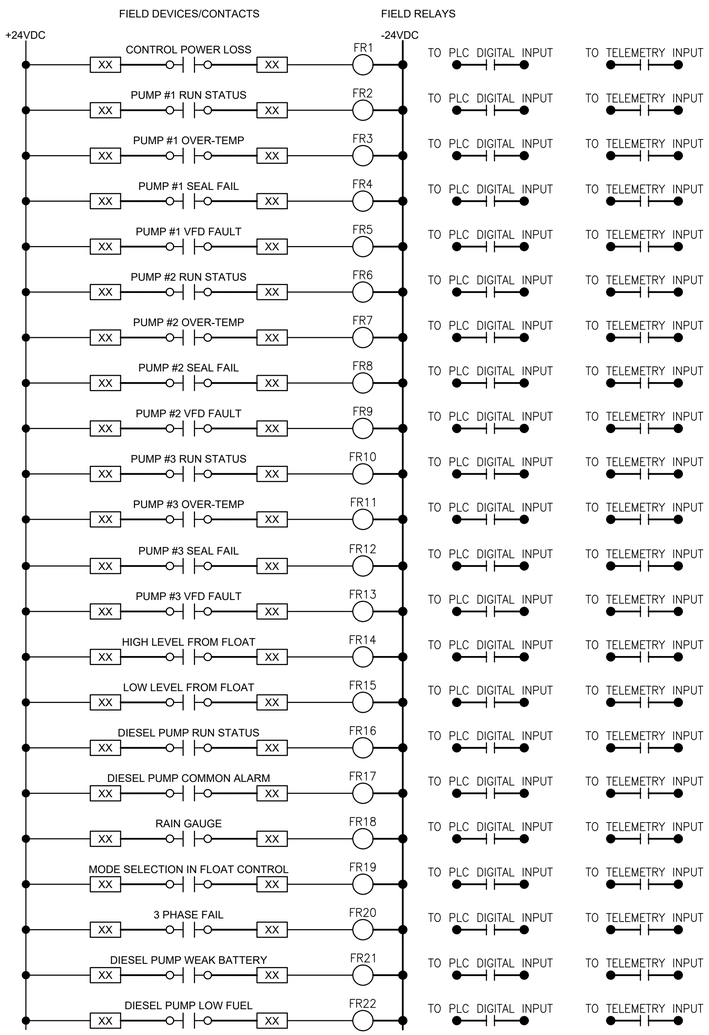

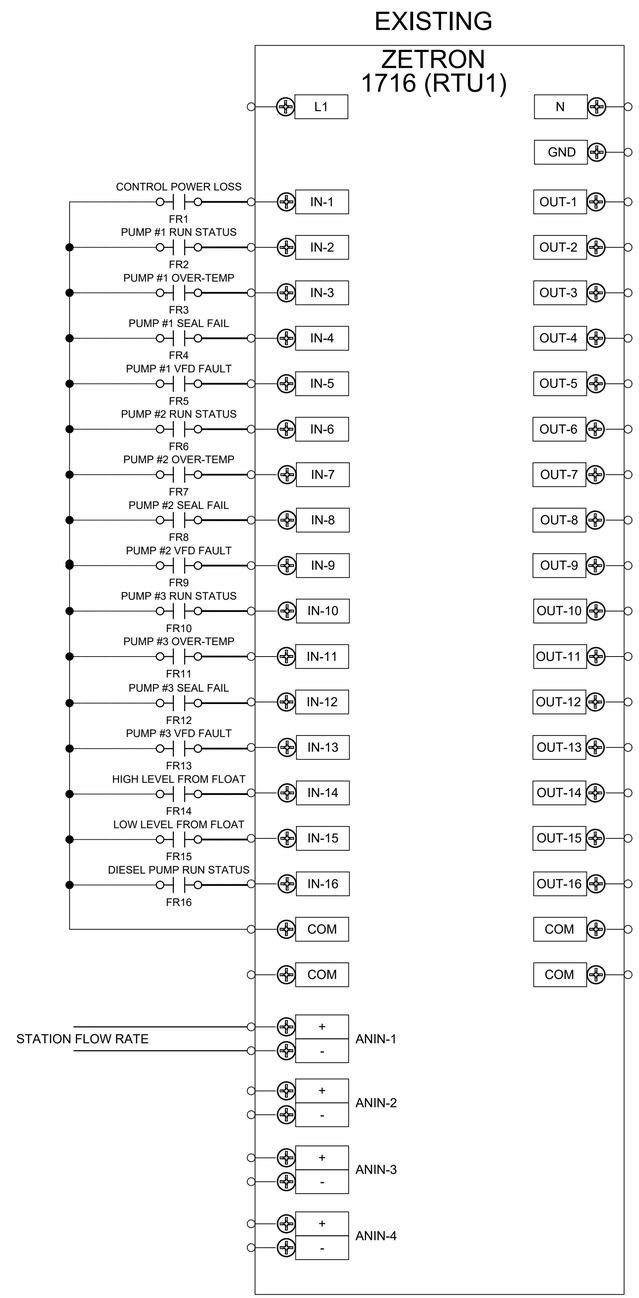

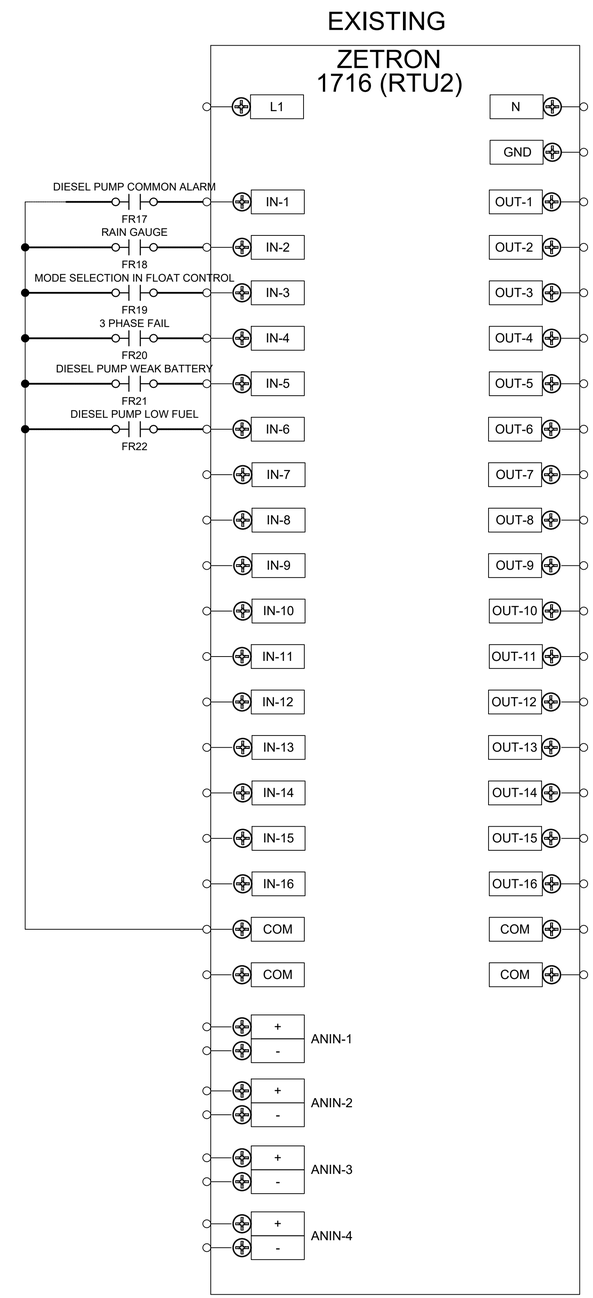

SCOPE OF WORK NOTES:

THE PANEL LAYOUT SHOWN IS INTENDED TO ESTABLISH THE SCOPE OF WORK AND EXPECTATIONS. FINAL LAYOUT AND DETAILS SHALL BE THE RESPONSIBILITY OF THE MOTOR CONTROL PANEL FABRICATOR. SUBMIT SHOP DRAWINGS FOR REVIEW.

PUMP CONTROL PANEL WIRING DIAGRAM

SCALE: NONE

BLN
BEAM·LONGEST·NEFF
8128 Castleton Road, Indianapolis, IN 46250
Phone: 317.849.5832
www.BLN-Eng.com
Fax: 317.841.4231

REVISIONS AND ISSUES	DATE	BY
1. UPDATE FIELD DEVICES, RELAYS, AND TERMINAL BLOCKS CONTROL CABINET, BREAKER E-12	11-15-2021	MB

JOSEPH W. SIMS
REGISTERED
NO
PE60860165
STATE OF
INDIANA
PROFESSIONAL ENGINEER

Joseph W Sims

UPHILL RUN LIFT
STATION PROJECT
200 Commercial St. Nashville, IN. 47448
CITY OF NEW ALBANY WASTEWATER
38 W. 10th STREET, NEW ALBANY, INDIANA 47150
PUMP CONTROL PANEL WIRING DIAGRAM

PLAN DATE: NOVEMBER 8, 2021
DESIGN: CHECK: DRAWN:
PROJECT NO. 2018167
SHEET NO. E-10

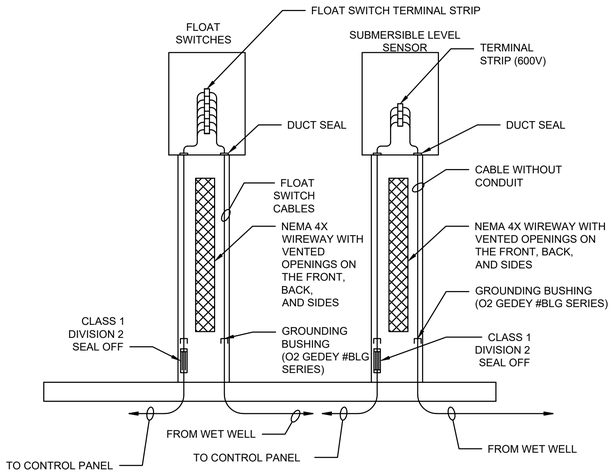

VENTED TERMINAL BOX - DETAIL 2

SCALE: NONE

1

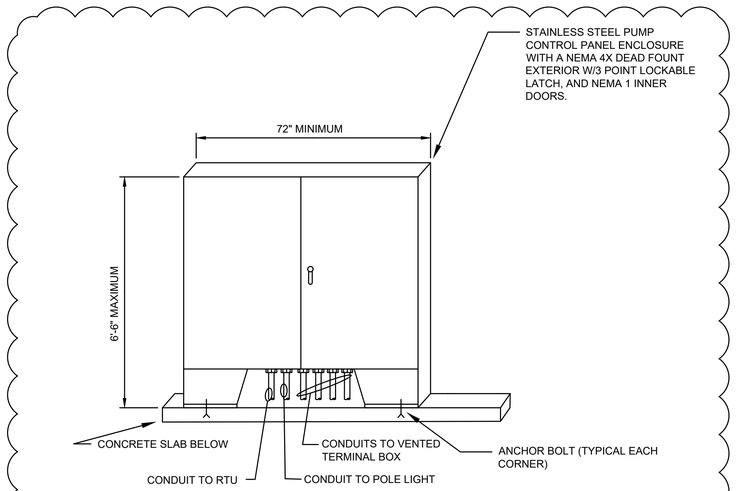

FREE STANDING PUMP CONTROL PANEL

NOT TO SCALE

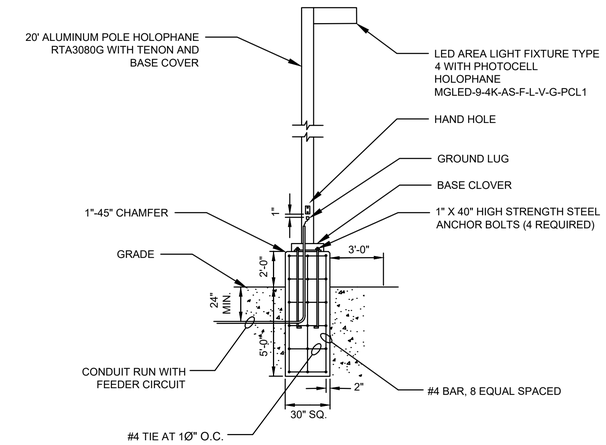

EXTERIOR LIGHT FIXTURE DETAIL

NOT TO SCALE

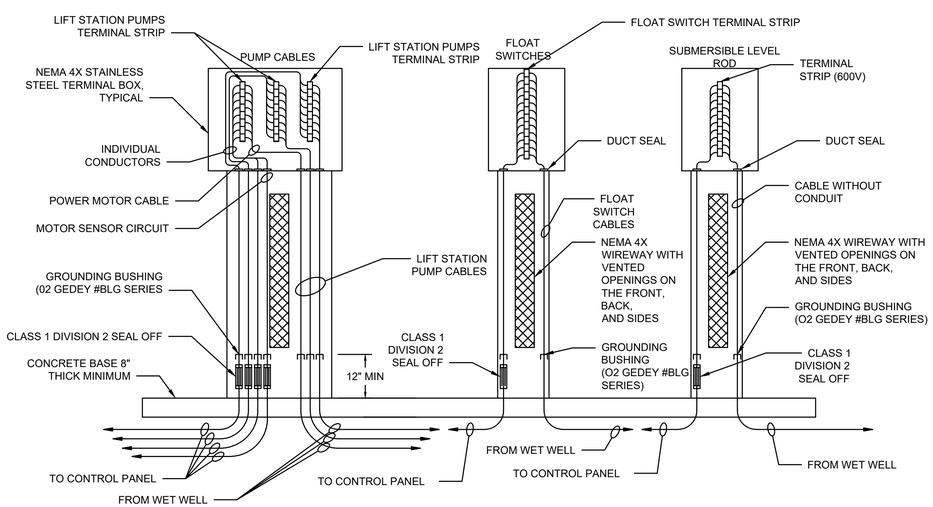

VENTED TERMINAL BOX - DETAIL 1

SCALE: NONE

1

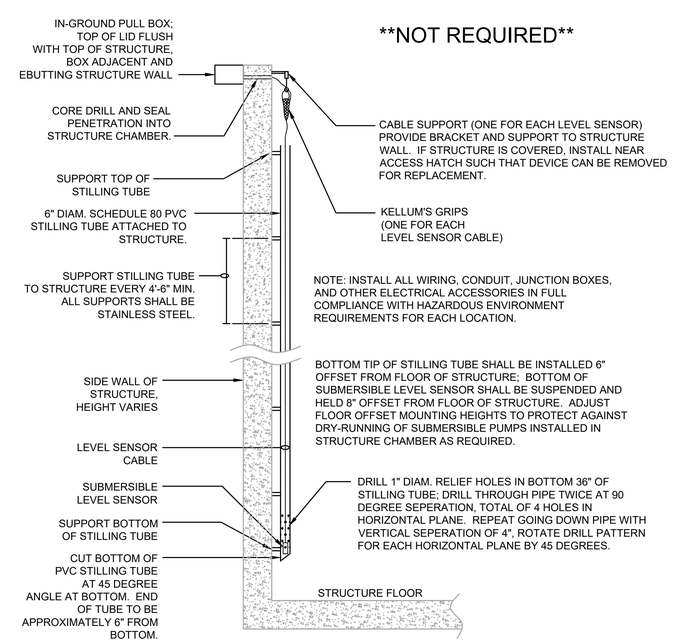

SUBMERSIBLE LEVEL SENSOR - STILLING TUBE DETAIL, TYPICAL

SCALE: NONE

BLN BEAM·LONGEST·NEFF
www.BLN.com
8126 Castleton Road, Indianapolis, IN 46250
Phone: 317 842 4300
Fax: 317 842 4305

REVISIONS AND ISSUES	DATE	BY
1. ANCHOR BOLTS, VENTS, ADDED AND DIMENSIONS, MODIFIED CONDUITS.	11-05-2021	DWD
CONDUITS, SEPARATED E-12.		

JOSEPH W. SIMS REGISTERED NO PE60860165 STATE OF INDIANA PROFESSIONAL ENGINEER

Joseph W Sims

UPHILL RUN LIFT STATION PROJECT
200 Commercial St. Nashville, IN. 47448
CITY OF NEW ALBANY WASTEWATER
38 W. 10th STREET, NEW ALBANY, INDIANA 47150

ELECTRICAL DETAILS

PLAN DATE: NOVEMBER 8, 2021
DESIGN: CHECK: DRAWN:
PROJECT NO. 2018167
SHEET NO. E-11

ELECTRICAL KEYED NOTES:

1. NEW FLOW METER ELECTRONICS (TYPICAL).
2. NEW STAINLESS STEEL 20"X16"X8" WINDOWED ENCLOSURE. FOR FLOW METER.
3. 120V CONTROL POWER GROUND TERMINAL BLOCK.
4. 120V CONTROL POWER NEUTRAL TERMINAL BLOCK.
5. 120V CONTROL POWER CIRCUIT BREAKER.
6. 120V SURGE PROTECTION DEVICE.
7. STAINLESS STEEL UNI-STRUT.
8. RIGID ALUMINUM CONDUIT FOR 4-20MA SIGNAL OUTPUT.
9. RIGID ALUMINUM CONDUIT FOR 120V CONTROL POWER FROM PCP.
10. RIGID ALUMINUM CONDUIT TO PLC FOR SIGNAL WIRING.
11. CONCRETE PAD.
12. NEW 4"X4"X.375" ALUMINUM ANGLE RACK. WELD ALL JOINTS.
13. ALUMINUM OR STAINLESS STEEL MEYER HUBS.
14. 8"x8" STAINLESS STEEL PULL BOX FOR CONTROL AND SIGNAL WIRES/CONDUIT.

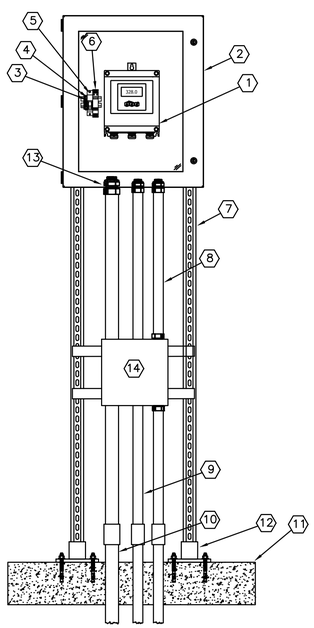

FLOW METER RACK DETAIL

NOT TO SCALE

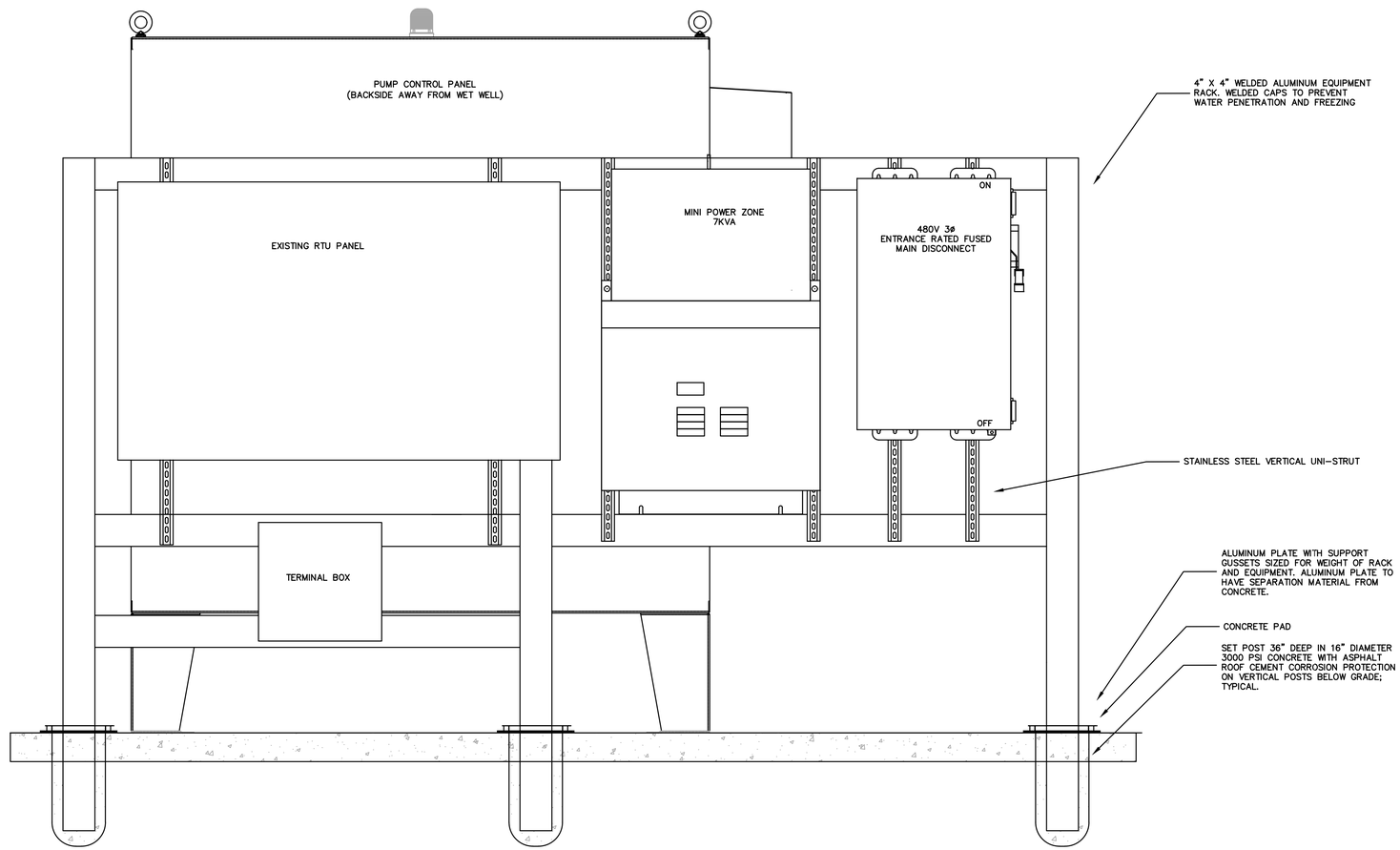

ELECTRICAL EQUIPMENT RACK DETAIL

NOT TO SCALE

BLN
BEAM·LONGEST·NEFF
8128 Castleton Road, Indianapolis, IN 46250
Phone: 317.849.5932
www.blnfirm.com
Fax: 317.841.4231

REVISIONS AND ISSUES	DATE	BY
1. UPDATED FLOW SWITCH, ADDED AND OVERCURRENT, ADDED CONTROL CIRCUITS, UPGRADED E-12	11-15-2021	MB

JOSEPH W. SIMS
REGISTERED
NO
PE60860165
STATE OF
INDIANA
PROFESSIONAL ENGINEER

Joseph W Sims

UPHILL RUN LIFT STATION PROJECT

200 Commercial St. Nashville, IN. 47448

CITY OF NEW ALBANY WASTEWATER

38 W. 10th STREET, NEW ALBANY, INDIANA 47150

ELECTRICAL DETAILS

PLAN DATE: NOVEMBER 8, 2021

DESIGN: | CHECK: | DRAWN:

PROJECT NO. 2018167

SHEET NO. E-12