ADDENDUM NO. 1
TO THE
BIDDING REQUIREMENTS AND CONTRACT DOCUMENTS
FOR THE
CHANDLER 1.5 MILLION GALLON WATER TOWER PROJECT

OWNER: Town of Chandler Utilities
401 E. Lincoln Avenue
Chandler, IN 47610

ISSUED BY/ENGINEER: Egis BLN USA, Inc.
8320 Craig Street
Indianapolis, Indiana 46250

ISSUED TO: All Plan and Specifications Holders of Record

ISSUE DATE: December 2nd, 2025

BID DATE: December 15th, 2025

This Addendum No. 1, consisting of 6 pages, shall clarify, correct, or change the Bidding Requirements or the proposed Contract Documents. This Addendum is a part of the Bidding Requirements and the proposed Contract Documents and shall govern in the performance of the Work.

PART 1 - PROJECT MANUAL

1.1 ITEM NO. 1 – SECTION 00200 – INSTRUCTIONS TO BIDDERS

A. Section 00200, Article 3 – Qualifications of Bidders is modified as follows:

1. 3.01 – To demonstrate Bidder's qualifications to perform the Work, Bidder must submit with the Bid a Qualifications Statement containing the following information:

2. 3.02 – A Bidder's failure to submit required qualification information may disqualify Bidder from receiving an award of the Contract.

1.2 ITEM NO. 2 – SECTION 00311 – PERMITS

A. The following has been inserted after Section 00311:

1. Permits executed as of December 1st, 2025, inserted:

a. 00311A – Executed IDEM Permit (PWSID# IN5287002)
b. 00311D – Executed Warrick County ROW Permit #2025-188

1.3 ITEM NO. 3 – SECTION 00411A – BID FORM ATTACHMENT A

A. The following Pay Item(s) have been added to Bid form Attachment A:

1. Flowable Backfill Over Utilities

1.4 ITEM NO. 4 – SECTION 00451 – QUALIFICATIONS STATEMENT

A. The Qualifications Statement (00451) has been inserted after Section 00435.

1.5 ITEM NO. 5 – SECTION 01220 – MEASUREMENT AND PAYMENT

A. The following Pay Item(s) have been added to Section 01220:

1. Flowable Backfill Over Utilities

1.6 ITEM NO. 6 – SECTION 02222 – STEEL TANK DEMOLITION

A. The following language is now shown in Section 3.4.B.2.:

1. Maintain fire watch during and for at least two to four (2-4) hours after flame cutting operations.

B. The following has been inserted after Section 02222:

1. Tank Inspection Reports have been inserted:

a. 02222A – Paradise Tank Inspection Report

b. 02222B – Frame Tank Inspection Report

1.7 ITEM NO. 7 – DIVISION 11/SECTION 11220 – EQUIPMENT/SUBMERSIBLE MIXERS

A. This Division (Equipment) & Section (Submersible Mixers) has been inserted after Section 09960.

1.8 ITEM NO. 8 – SECTION 13210 – ELEVATED COMPOSITE WATER STORAGE TANKS

A. Section 13210 is modified as follows:

1. 1.1.B. now includes reference to Section 11220.

1.9 ITEM NO. 9 – DIVISION 15/16 – MECHANICAL, ELECTRICAL AND INSTRUMENTATION AND CONTOLS

A. Divisions 15 and 16 have been inserted after Section 13210 to replace the mechanical and electrical specifications in the previous division format (23, 25, and 26).

PART 2 - DRAWINGS

2.1 ITEM NO. 1 – DRAWING C002 – GENERAL NOTES

A. Drawing C002 is modified as follows:

1. All general notes and key notes updated to match those on their respective sheets.

2.2 ITEM NO. 2 – DRAWING C100 – TANK SITE PLAN

A. Drawing C100 is modified as follows:

1. Key note S2 has been updated to reference the driveway details.

2. Key note S5 has been updated to note that the water fill station will be an Elemech FS-63 model and that project specific details will be provided by the manufacturer upon order. Please contact Danielle Gorder at dgorder@elemechinc.com for inquiries on the fill station.

2.3 ITEM NO. 3 – DRAWING C102 – TANK DETAILS

A. Drawing C102 is modified as follows:

1. Tank Elevation and Plan views has been updated to show the inlet/outlet pipe and overflow pipe in the correct orientation to match the tank plan. A north arrow has also been added for reference.

2.4 ITEM NO. 4 – DRAWING C103 – TANK PIPING PLAN DETAILS

A. Drawing C103 is modified as follows:

1. Tank Piping plan and elevation views have been flipped to show the inlet/outlet pipe and overflow pipe in the correct orientation to match the tank plan.

2.5 ITEM NO. 5 – DRAWING C104 – SITE WATER MAIN

A. Drawing C104 is modified as follows:

1. Key note W2 has been updated to say 16" water main.

2. Profile note for backfill within Fuquay Road limits has been updated to Flowable Backfill, per Warrick County Requirements.

2.6 ITEM NO. 6 – DRAWING C105 – SITE DRAINAGE

A. Drawing C105 is modified as follows:

1. Fill Station Drain Line has been updated to include SDR26 PVC piping to connect to the fill station.

2. Key note T5 has been updated to note the inclusion of SDR26 piping to connect to the fill station with the size being determined in coordination with the manufacturer. Please contact Danielle Gorder at dgorder@elemechinc.com for inquiries on the fill station.

2.7 ITEM NO. 7 – DRAWING C200 – PARADISE & FRAME SITE DEMOLITION PLANS

A. Drawing C200 is modified as follows:

1. The Frame Site Demolition water main abandonment has been adjusted to be on the east side of the existing hydrant assembly.

2.8 ITEM NO. 8 – DRAWING C400 – MAINTENANCE OF TRAFFIC PLAN

A. Drawing C400 is modified as follows:

1. Notes have been added to address location of permit requirements for MOT with Warrick County as well as usage of this MOT plan for both the water main connection construction and demolition of the existing tower.

2.9 ITEM NO. 9 – DRAWING C505 – SITE DETAILS

A. Drawing C505 is modified as follows:

1. Elemech fill station details removed. Project specific details will be provided by the manufacturer upon order.

2.10 ITEM NO. 10 – DRAWING C506 – ROAD DETAILS

A. Drawing C506 is modified as follows:

1. INDOT Standard Detail E610-DRIV-05 has been added.

2. Concrete Pavement detail has been updated to 9" for concrete pavement thickness.

PART 3 - ADDITIONAL TECHNICAL INFORMATION

The following technical information is not part of the Contract Documents, but Bidder is entitled to rely upon this "technical data" as provided in Paragraph 4.02 of the General Conditions. Bidder is responsible for any interpretation or conclusion Bidder draws from any "technical data" or any other data, interpretations, opinions or information contained in such information.

3.1 ITEM NO. 1 – QUESTIONS AND RESPONSES LIST

A. Questions and Responses List No. 1 is attached to this addendum and addresses questions received as of 5:00 PM November 26th, 2025.

Except as modified by this Addendum and other Addenda, the Bidding Requirements and the proposed Contract Documents shall remain unchanged. You will receive no other notification of this Addendum. **RECEIPT OF THIS ADDENDUM MUST BE ACKNOWLEDGED IN SECTION 00410 - BID FORM, PAGE 00410-1.**

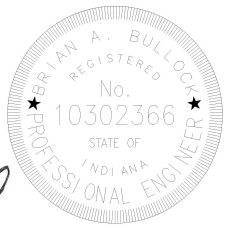

CERTIFIED BY:

Brian A. Bullock, P.E.
Registered P.E. No. 10302366
State of Indiana

Encls.:

Sheet C002

Sheet C100

Sheet C102

Sheet C103

Sheet C104

Sheet C105

Sheet C200

Sheet C400

Sheet C505

Sheet C506

Chandler 1.5 Million Gallon Water Tower – Specifications (2025.12.1)

Questions and Responses List No. 1

QUESTIONS AND RESPONSES LIST NO. 1
FOR THE
CHANDLER 1.5 MILLION GALLON WATER TOWER PROJECT

The following questions that did not warrant revisions to the Contract Documents have been presented by potential bidders for the **Chandler 1.5 Million Gallon Water Tower** Project. Responses to these questions are provided below. These questions and responses serve only to clarify the Bidding Documents and the Contract Documents, as applicable. The responses to these questions do not modify in any respect the conditions and provisions of the Contract Documents. In the event of a conflict between these responses and the Contract Documents, the provisions of the Contract Documents shall supersede these responses.

Q: The Advertisement for bid states that bids will be received at 101 Constitution Court and read at 401 E. Lincoln Ave at 6:00 PM. However, the Bid Form states the bid is submitted to 401 E. Lincoln Ave. Can you confirm which address the bid is to be delivered to?

R: If the bid is going to be mailed, it shall be delivered to 101 Constitution Court by 4:00 PM local time on Monday, December 15th. If the bid is being delivered in-person, it shall be delivered to 401 E. Lincoln Ave. by 6:00 PM local time on Monday, December 15th to be able to be opened and read at the Town Council meeting scheduled at that time.

Q: Does the owner have a budget or expected cost for the project?

R: The Owner has budgeted this project for up to around $8,500,000.

Q: Please confirm weekend work will be allowed.

R: Please refer to 1.3.D.1 of the General Administrative Requirements (Section 01001). The work site hours are listed from 7 AM to 7 PM on weekdays. Weekend hours will be approved by the Town of Chandler. Any work that requires the Owner and/or Engineer to be present shall be conducted during normal business hours on weekdays.

Q: In regard to the specifications Table of Contents, it seems to be missing a page as it cuts off at Division 16 Electrical, and there are no sections after the Division 16 title page? The following divisions and sections, 23, 25, and 26 are not listed on the Table of Contents as well.

R: The Division 23, 25, and 26 specifications will be the same electrical specifications that correspond to "Division 15/16". Our electrical design sub is

converting them to the correct divisions, and the table of contents will be updated to match this. This will be addressed in this Addendum #1.

Q: Have the existing buildings located at the new water tower site been completely demolished? Were they taken down to grade or were foundations removed?

R: Yes. The existing buildings that were located at the new tower site have been demolished completely, including the foundations.

Q: Is there a tank inspection report for both the existing Paradise and Frame tanks?

R: Yes. Tank inspection reports for both of the existing tanks to be demolished have now been included in the updated specifications. Refer to Addendum Form No. 1 for more information.

Q: What is the volume, height/diameter, psi in full operation of the existing tanks?

R: Paradise – 300,000 gal., ~113' height/~44' diameter, ~50 psi in full operation
Frame – 240,000 gal., ~100' height/~20' diameter, ~43 psi in full operation

Q: Is there a paint analysis available for the existing tanks?

R: No. There are not any official paint analyses available for either of the existing tanks. The Owner has stated that both tanks were sand blasted down to metal before being repainted, so there should be no lead based paints. The specifications reflect this. Please also refer to the tank inspection reports as the contain coating inspections.

Q: Is torch cutting with the paint intact acceptable for means and methods of demolition?

R: Yes. These means and methods of demolition are acceptable.

Q: Can both of the existing tanks be removed under the same mobilization?

R: Yes. Both tanks can be removed under the same mobilization. They will both be removed from system service at the same time after the new tank has been brought online.

Q: Can the Frame standpipe be tipped/dropped in the southern direction?

R: Yes, it can be tipped/dropped in this direction if this is deemed as the best method for demolition. The Frame standpipe is located on non-Town of Chandler owned land, so proper permission from the property owner is of high

importance. The Contractor will be required to obtain contact information and coordinate with the adjacent property owners.

Q: What are the requirements for closing down Fuquay Road for demolition?

R: Please reach out to the county at the contacts provided in an upcoming question. We have a ROW permit (#2025-188) with them for the site work involved along Fuquay Road, but that does not include specific reference to any permitting for MOT related to demolition or hauling the tank off site.

Q: Is Fuquay Road county or city maintained?

R: It is county maintained.

Q: Who is the contact at the county that we would need to reach out to regarding signage and permitting requirements for the demolition?

R: Both of the below contacts are those that should be reached out to regarding signage and permitting questions/requirements for demolition.
Steve Sherwood (ssherwood@warrickcounty.gov)
Bobby Howard (bhoward@warrickcounty.gov)
The Warrick County ROW permit we have acquired will be amended to include the demolition portion of the project.

Q: Will a traffic control plan be required? Will it need to be stamped by an engineer? Is there any permitting required for the road closure or will it be waived by the county?

R: As noted previously, please reach out to the county at the contacts provided to determine the need for a MOT plan and/or permitting. Please also reference the existing ROW permit we have in place for the other site work. If the MOT plan is needed, it will need to be stamped by an engineer.

Q: Are the surrounding property owners aware of either of the tank demolitions?

R: No. Proper notification will need to be handled by the contractor in advance of the demolitions.

Q: What items are to be salvaged at either of the existing tanks?

R: We have requested the Owner provide us a list of any items to be salvaged at either site in or around the towers. Those will be provided to us and then provided to the contractor prior to the start of the project.

Q: Can the pre-demolition conference be held over Teams?

R: Yes.

Q: Can a demolition plan be submitted in place of the pre-demolition conference?

R: No. We would prefer to have the pre-demolition conference to ensure all plans/schedules are understood and proper coordination with adjacent property owners has been made.

Q: Is this a prevailing wage project?

R: No. This will not be a prevailing wage project.

Q: Will there be domestic procurement requirements for this project?

R: No. There will not be any domestic procurement requirements for this project.

Q: Has a Right-of-Way agreement with adjacent property owners for additional workspace been made?

R: No. There has not been any agreements with adjacent property owners for additional workspace at any of the sites. The Contractor will be required to coordinate with these adjacent property owners if additional space is needed.

Q: Will the Contractor be responsible for paying for any times that adjacent property owners need to vacate their property?

R: Yes. If any adjacent property owners are required to vacate their property during the project, the Contractor will be responsible in covering the costs of those displacements.

Encl.:

NONE

PROJECT DESCRIPTION

THIS PROJECT INCLUDES THE CONSTRUCTION OF A NEW 1.5 MILLION GALLON COMPOSITE ELEVATED WATER TOWER AT A SITE LOCATED NEAR THE INTERSECTION OF FUQUAY ROAD AND STATE ROUTE 261. THIS PROJECT ALSO INCLUDES THE WATER MAIN, VALVES AND OTHER APPURTENANCES, CONTROLS, TANK CONTROL VALVE, ELECTRICAL CONNECTIONS, WATER FILL STATION, DRAINAGE, PAVEMENT, AND SITE FENCING AS SPECIFIED. SUPPLEMENTAL TO THIS NEW PARADISE TOWER, A TANK CONTROL VALVE WILL NEED TO BE INSTALLED OFFSITE TO CONTROL FLOWS FOR THE EXISTING PLANK TOWER. LASTLY, THIS PROJECT WILL INCLUDE THE DEMOLITION AND REMOVAL OF THE EXISTING PARADISE WATER TOWER ADJACENT TO THE NEW TOWER SITE AS WELL AS THE DEMOLITION AND REMOVAL OF THE OFFSITE FRAME STANDPIPE. THE DEMOLITION WILL INCLUDE THE DISCONNECTION OF ANY AND ALL UTILITY SERVICES AS NECESSARY.

GENERAL NOTES

1. THE CONSTRUCTION PLANS SHALL GOVERN OVER ANY OTHER FORM OF MEDIA, WHICH INCLUDES DIGITAL FILES OF THIS PROJECT.
2. ALL PERMITS AND APPROVALS WILL BE OBTAINED BY THE **ENGINEER** FROM THE RESPECTIVE CITY, COUNTY, STATE & FEDERAL AGENCIES PRIOR TO STARTING CONSTRUCTION.
3. ALL CONSTRUCTION METHODS AND MATERIALS MUST CONFORM TO CURRENT STANDARDS AND SPECIFICATIONS FOR THE GOVERNING MUNICIPALITY REQUIREMENTS.
4. MAINTENANCE OF TRAFFIC NEEDED FOR THIS PROJECT SHALL BE INSTALLED AND MAINTAINED PER INDOT SPECIFICATIONS AND THE INDIANA MUTCD MANUAL.
5. THE **CONTRACTOR** SHALL BE RESPONSIBLE FOR ALL FIELD DIMENSIONS AND SHALL VERIFY ALL DIMENSIONS ON THE SITE PRIOR TO START OF CONSTRUCTION. IF ANY DISCREPANCIES ARE FOUND IN THESE PLANS FROM ACTUAL FIELD CONDITIONS, THE **CONTRACTOR** SHALL NOTIFY THE **ENGINEER** IMMEDIATELY.
6. ALL QUANTITIES GIVEN ON THESE CONSTRUCTION PLANS OR IN THE SCOPE OF WORK SECTION ARE ESTIMATES AND SHALL BE CONFIRMED BY THE BIDDING **CONTRACTOR**.
7. IT SHALL BE THE RESPONSIBILITY OF THE **CONTRACTOR** TO MAINTAIN QUALITY CONTROL THROUGHOUT THIS PROJECT.
8. BEARINGS, DIMENSIONS, AND EASEMENTS ARE SHOWN FOR REFERENCE ONLY. SEE RECORD SURVEYS AND PLATS FOR EXACT INFORMATION.

UTILITY NOTES

1. ALL EXISTING UTILITY SIZES, LOCATIONS, AND DEPTHS SHALL BE FIELD VERIFIED BY THE **CONTRACTOR** PRIOR TO CONSTRUCTION. UTILITY SIZES AND LOCATIONS SHOWN ARE BASED ON BEST AVAILABLE INFORMATION.
2. BEFORE WORKING WITH OR AROUND EXISTING UTILITIES, THE APPLICABLE UTILITY COMPANY SHALL BE CONTACTED BY THE **CONTRACTOR**. IT SHALL BE THE **CONTRACTOR'S** RESPONSIBILITY TO NOTIFY AND COORDINATE CONSTRUCTION WITH ALL RESPECTIVE UTILITIES.
3. IT WILL BE THE **CONTRACTOR'S** RESPONSIBILITY TO MAINTAIN IN SERVICE ALL EXISTING UTILITIES ENCOUNTERED DURING CONSTRUCTION UNLESS OTHERWISE INDICATED IN THE CONSTRUCTION DRAWINGS.
4. THE **CONTRACTOR** IS RESPONSIBLE FOR COORDINATING WITH THE UTILITY COMPANIES FOR CONNECTION OF PROPOSED UTILITY LINES ON THE PROJECT SITE.
5. FOR VIEWING CLARITY OF THESE CONSTRUCTION PLANS, PIPES OR STRUCTURES MAY NOT BE DRAWN TO SCALE.
6. A MINIMUM OF 18 INCHES OF VERTICAL SEPARATION AND 10 FEET OF HORIZONTAL SEPARATION SHALL BE PROVIDED BETWEEN WATER AND STORM/SANITARY LINES. IF THIS SEPARATION CANNOT BE ACHIEVED, THE STORM/SANITARY SEWER MUST BE CONSTRUCTED OF WATER WORKS GRADE DUCTILE IRON PIPE WITH MECHANICAL JOINTS AND FITTINGS.
7. A MINIMUM OF 18 INCHES OF VERTICAL SEPARATION SHALL BE PROVIDED BETWEEN STORM AND SANITARY SEWERS. IF THE VERTICAL SEPARATION BETWEEN THE STORM AND SANITARY LINES CANNOT BE ACHIEVED, A CONCRETE CRADLE SHALL BE USED AT THESE CROSSINGS.
8. WHEN CONNECTIONS ARE TO BE MADE TO EXISTING PIPING AND STRUCTURES OR WHERE CONSTRUCTION IS IN THE VICINITY OF EXISTING PIPING, THE LOCATION AND ELEVATION OF THE EXISTING PIPING AND STRUCTURES SHALL BE FIELD VERIFIED BY THE **CONTRACTOR**. IF ANY DISCREPANCIES ARE FOUND, THEN THE **ENGINEER** SHALL BE NOTIFIED IMMEDIATELY.
9. COORDINATE WITH CORRESPONDING UTILITY COMPANIES FOR EXACT SIZE, TYPE, AND LOCATION FOR ELECTRIC, TELEPHONE, GAS, AND FIBER OPTIC LINES. UTILITY SERVICE PROVIDERS MAY REQUIRE INSTALLATION OF ONSITE CONDUITS. THE **CONTRACTOR** SHALL COORDINATE REQUIREMENTS FOR CONDUITS INCLUDING NUMBER, LOCATION, PULL STRING, ETC. WITH RESPECTIVE UTILITY PROVIDERS PRIOR TO BIDDING.

DEMOLITION NOTES

1. SEE DEMOLITION PLANS FOR MORE DETAILS. (C200)

EROSION CONTROL NOTES

1. ADDITIONAL EROSION CONTROL MEASURES MAY BE REQUIRED BY THE FIELD INSPECTOR.
2. THERE SHALL BE NO DIRT, DEBRIS, OR STORAGE OF MATERIALS IN THE STREET.
3. GRAVEL BAGS, SILT SOCKS, OR DANDY BAGS CAN BE USED FOR STORM INLET PROTECTION WHERE NECESSARY (SEE EROSION CONTROL DETAILS).
4. SEE EROSION CONTROL PLAN, SWPPP, AND DETAILS FOR MORE INFORMATION. (C300, C350, C351, AND C352)

M.O.T. NOTES

1. PLEASE REFER TO THE PERMITS SECTION OF THE SPECIFICATIONS TO SEE REQUIREMENTS OF THE RIGHT-OF-WAY PERMIT WITH **WARRICK COUNTY** FOR SIGNAGE POSTING AND NOTIFICATION TIMES.
2. THIS M.O.T. PLAN SHALL BE USED FOR THE FOLLOWING ROAD CLOSURES:
   - 2.1. ROAD CUT TO CONSTRUCT CONNECTION TO EXISTING WATER MAIN.
   - 2.2. DEMOLITION OF EXISTING PARADISE WATER TOWER .
3. SEE DETAIL MOT-05 ON C507 FOR MORE INFORMATION ON LOCAL DETOUR SIGN PLACEMENT.
4. SEE DETAIL SHEETS C507 & C508 FOR MORE INFORMATION ON ADDITIONAL MAINTENANCE OF TRAFFIC PLAN REQUIREMENTS.
5. FOR FULL INSTRUCTIONS, VISIT THE **IMUTCD** MANUAL.
6. SEE PLANS FOR MORE DETAILS. (C400)

WATER NOTES

1. "T.O.P. EL" REFERS TO TOP OF PIPE ELEVATION OF WATER MAIN AT EACH SEWER CROSSING. ELEVATIONS INDICATE THE MINIMUM DEPTH AT WHICH 18" OF SEPARATION WILL BE MAINTAINED.
2. ALL WATER MAIN SHALL BE DUCTILE IRON PIPE (AWWA C150/C151) UNLESS OTHERWISE NOTED.
3. GRANULAR BACKFILL IS REQUIRED FOR ALL OPEN CUT WATER MAINS AND SERVICES UNDER OR WITHIN 5 FT OF ANY PAVED SURFACES.
4. SEE PLANS FOR MORE DETAILS. (C104)

STORM NOTES

1. "T.O.P. EL" REFERS TO TOP OF PIPE ELEVATION OF WATER MAIN AT EACH SEWER CROSSING. ELEVATIONS INDICATE THE MINIMUM DEPTH AT WHICH 18" OF SEPARATION WILL BE MAINTAINED.
2. ALL STORM PIPE SHALL BE ADS N-12 UNLESS OTHERWISE NOTED.
3. SEE PLANS FOR MORE DETAILS. (C105)

KEY NOTES

Site

(S1) PROPOSED ASPHALT DRIVE, SEE DETAIL SHEET C506 FOR PAVEMENT SCHEDULE.

(S2) REPLACE EXISTING DRIVEWAY APRON . SEE DETAIL SHEET C506 FOR DRIVEWAY DETAILS AND CONCRETE PAVEMENT SCHEDULE.

(S3) 6' SECURITY FENCE, SEE DETAIL SHEET C505.

(S4) 25' MECHANICAL SLIDE GATE, SEE DETAIL SHEET C505.

(S5) PROPOSED ELEMECH FS-63 FILL STATION. PROJECT SPECIFIC DETAILS WILL BE PROVIDED BY MANUFACTURER UPON ORDER.

(S6) PIPE BOLLARD, SEE DETAIL SHEET C506.

(S7) ASPHALT PATCH OVER WATER MAIN, SEE DETAIL SHEET C506.

(S8) SECURITY LIGHTING, SEE DETAIL SHEET C505.

(S9) REPAIR/REPLACE DRIVEWAY CULVERT IN KIND.

Water

(W1) UTILITY CROSSING. MAINTAIN REQUIRED SEPARATIONS.

(W2) CONNECT 16" PIPING TO WATER TOWER CONTROL ROOM. REFER TO DETAIL SHEET C103 FOR MORE INFORMATION.

(W3) CONNECT 3" PIPING TO FILL STATION. SEE DETAIL SHEET C505 FOR MORE INFORMATION.

(W4) INSTALL HYDRO-STOP. CONSULT SPECIFICATIONS FOR ALLOWABLE TIMES OF ISOLATION AND NOTIFY THE **TOWN OF CHANDLER** BEFORE ISOLATION BEGINS.

Storm

(T1) SLOPE TO STRUCTURE.

(T2) REUSE EXISTING RIP-RAP, IF POSSIBLE. ADD ADDITIONAL RIP-RAP AROUND OUTLET AS NEEDED TO MEET OUTLET PROTECTION REQUIREMENTS. SEE SHEET C351 FOR MORE DETAIL.

(T3) OVERFLOW INLET STRUCTURE, SEE DETAIL SHEET C503.

(T4) UTILITY CROSSING. MAINTAIN REQUIRED SEPARATIONS.

(T5) CONNECT INTERNAL FILL STATION DRAIN TO STRUCTURE WITH SDR-26 PVC PIPING. SIZE TO BE DETERMINED IN COORDINATION WITH MANUFACTURER.

Demolition

(D1) DECONSTRUCT AND REMOVE ALL TANK COMPONENTS TO A DEPTH OF ~3' BELOW EXISTING GRADE AND HAUL OFF-SITE AFTER NEW WATER TOWER IS FULLY ONLINE. CONFIRM WITH THE **TOWN OF CHANDLER** THAT NO PARTS ARE TO BE SALVAGED. REMOVE ALL FENCING AND DISCONNECT ALL UTILITY CONNECTIONS. GRADE AND SEED WHERE NECESSARY TO PREVIOUS CONDITION UNLESS OTHERWISE NOTED.

(D2) INSTALL LINE STOP & CAP AND ABANDON WATER MAIN IN PLACE. WORK WITH THE **TOWN OF CHANDLER** TO DETERMINE ANY & ALL VALVES TO BE PERMANENTLY SHUT. DISCONNECT AND REMOVE ANY APPLICABLE WATER METERS AND HYDRANTS AND RETURN THEM TO THE **TOWN OF CHANDLER.**

(D3) REMOVE OVERFLOW DRAIN PIPING.

(D4) CONFIRM THAT ALL PREVIOUS BUILDING, SIDEWALK, AND UTILITY CONNECTIONS HAVE BEEN DEMOLISHED OR ABANDONED ON SITE. IF ANY REMAIN, REMOVE THEM AS NEEDED.

(D5) REMOVE GATE, POSTS, AND/OR CONCRETE BARRIERS.

Plank Altitude Valve

(P1) INSTALL CONTROL VALVE STATION. SEE DETAIL ON SHEETS C106 & C107 FOR MORE INFORMATION.

(P2) CLOSE EX. 16" BUTTERFLY VALVE BEFORE VALVE AND TAP INSTALLATION TIME. CONSULT SPECIFICATIONS FOR ALLOWABLE TIMES OF ISOLATION AND NOTIFY THE **TOWN OF CHANDLER** BEFORE ISOLATION BEGINS.

(P3) INSTALL HYDRO-STOP BEFORE VALVE AND TAP INSTALLATION TIME. CONSULT SPECIFICATIONS FOR ALLOWABLE TIMES OF ISOLATION AND NOTIFY THE **TOWN OF CHANDLER** BEFORE ISOLATION BEGINS.

1

CONTROL POINT REFERENCES

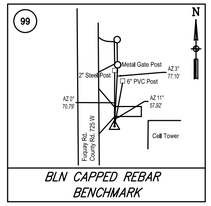

BLN CAPPED REBAR BENCHMARK

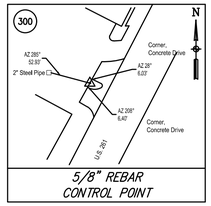

5/8" REBAR CONTROL POINT

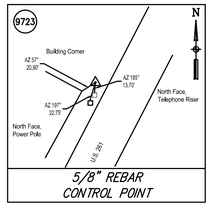

5/8" REBAR CONTROL POINT

SURVEY NOTES

1. THE UTILITIES INDICATED ON THESE CONSTRUCTION PLANS AND ON THE SURVEY MAY NOT BE A COMPLETE INVENTORY OF ALL EXISTING UTILITIES CURRENTLY ON OR NEAR THE SITE. THE SIZE AND LOCATION OF THESE UTILITIES MAY BE APPROXIMATE.
2. ANY CONFLICTS OR DISCREPANCIES THAT OCCUR DURING CONSTRUCTION SHOULD BE IMMEDIATELY DIRECTED TO THE **ENGINEER**.
3. THE **ENGINEER** SHALL NOT BE HELD LIABLE FOR ANY INACCURATE UTILITY OR SURVEY INFORMATION INDICATED, OR NOT INDICATED ON THIS SURVEY.

SURVEY CONTROL

- HORIZONTAL COORDINATES ARE IN STATE PLANE WEST COORDINATE SYSTEM (NAD 83).
- COORDINATES ARE IN SURVEY FEET.
- VERTICAL DATUM: NAVD 88
- EGIS ESTABLISHED THE CONTROL.

VERTICAL CONTROL

BENCHMARKS

BENCHMARK	ELEVATION	DESCRIPTION
TBM #99	467.69' (NAVD 88)	BLN CAPPED REBAR SET FLUSH WITH GRADE LOCATED AT THE SOUTHWEST CORNER OF THE SITE, APPROXIMATELY 12 FEET EAST OF THE EAST EDGE OF FUQUAY RD. AND 36 FEET NORTH OF A UTILITY POLE.

HORIZONTAL CONTROL

CONTROL POINTS

ID	NORTHING	EASTING	ELEVATION	DESCRIPTION
300	999844.895	2866919.593	—	5/8" CAPPED REBAR
9723	1000045.636	2867025.031	—	5/8" CAPPED REBAR

CP # - CONTROL POINT

TBM # - BENCHMARK

FLOOD ZONE

THIS PROJECT SITE IS LOCATED WITHIN FLOOD ZONE DESIGNATION X AS SHOWN ON FIRM MAP 18173C0210D DATED 08/02/2012.

"IT'S THE LAW" 811 Know what's below. Call before you dig. 2 WORKING DAYS BEFORE YOU DIG.

PROPOSED LEGEND

HYDRANT		FLOW LINE	
VALVE		FD	FOUNDATION DRAIN
TEE		TV	CABLE TV LINE**
REDUCER		E	ELECTRIC LINE**
BEND		FO	FIBER OPTIC LINE
LINE STOP WITH CAP		UD	STORM UNDERDRAIN
THRUST BLOCK			STORM SEWER
CAP			SANITARY SEWER
WATER METER		G	GAS LINE
PIV POST INDICATOR VALVE		T	TELEPHONE LINE**
FIRE CONNECTION			WATER MAIN
TRANSFORMER PAD			SERVICE LINE
SIGN		X X X X X X X X X	ABANDON UTILITY
HANDICAP PARKING			
CO CLEAN OUT			
STORM MANHOLE			
STORM GRATE INLET			
STORM BEEHIVE/YARD DRAIN			
STORM END SECTION			
STORM COMBINATION INLET			
BMP/AQUA-SWIRL			
NYLOPLAST STRUCTURE			
SANITARY MANHOLE/GRINDER PUMP			
TELEPHONE RISER			
PARKING BARRIER			

**PREFIX FOR UTILITY LINES:
UG - UNDERGROUND
OH - OVERHEAD

	FLOW ARROW
785	EXISTING CONTOURS
785	PROPOSED CONTOURS
	FLOWLINE/SWALE
E:XXX.XX	FLOW LINE ELEVATION
XXX.XX	SPOT ELEVATION
XXX.XX H.P.	HIGH POINT ELEVATION
XXX.XX L.P.	LOW POINT ELEVATION
TC:XXX.XX BC:XXX.XX	TOP/BOTTOM CURB ELEVATION
TW:XXX.XX BW:XXX.XX	TOP/BOTTOM WALL ELEVATION
ME - MATCH EXISTING GRADE	

SURVEY/EXISTING CONDITION LEGEND

FLY MONUMENT	LIGHT POLE	WATER VALVE	
BM BENCHMARK	TELEPHONE POLE	VALVE BOX	
GPS CONTROL POINT	GUY POLE	IRON PIPE (SIZE)	
MON PROPERTY MONUMENT	TB TELEPHONE BOOTH	SPRINKLER	
SECTION CORNER	TELEPHONE RISER	WG WATER GATE	
PST POST	T TELEPHONE MANHOLE	WM WATER METER	
AC AIR CONDITIONER	CABLE RISER	G GAS MANHOLE	
STAND PIPE	CABLE MANHOLE	NATURAL GAS STORAGE WELL	
S SEPTIC TANK	LOOP DETECTOR BOX	GM GAS METER	
SHRUB	SANITARY MANHOLE	GAS PEDISTAL	
STUMP	WP WELL PIT	GV GAS VALVE	
SATELITE DISH	MH MANHOLE - OTHER	PV PETROLEUM VALVE	
GUY WIRE ANCHOR	STORM MANHOLE	TR TRAFFIC MANHOLE	
SIGN	CURB INLET	H HAND HOLE	
GROUND LIGHT	CB CATCH BASIN	CC-E CONTROLLER CABINET	
FP FLAG POLE	DROP INLET	TRAFFIC SIGNAL	
MAST ARM POLE	CD CURB DRAIN	E ELECTRIC MANHOLE	
UTILITY POLE	FIRE HYDRANT	ER ELECTRIC RISER	
STRAIN POLE	W WATER MANHOLE	EM ELECTRIC METER	
JOINT POWER/TEL. POLE	W WELL	TP ELECTRICAL BOX	
POWER POLE			

X X	BARB-WIRE FENCE	C	CABLE TV LINE**
/ /	WOOD FENCE	EL	ELECTRIC LINE**
O O	RAIL WOVEN FENCE	FO	FIBER OPTIC LINE
O O	CHAIN-LINK FENCE		STORM SEWER
	IRON FENCE		SANITARY SEWER
O O	PRIVACY FENCE	G	GAS LINE
T T T T T T	GUARD RAIL	T	TELEPHONE LINE**
	TREE/SHRUB LINE	W	WATER LINE

**PREFIX FOR UTILITY LINES:
UG - UNDERGROUND
OH - OVERHEAD

ABBREVIATIONS AND TERMS

IE/INV	= INVERT ELEVATION
TC	= TOP OF CURB
RIM	= RIM / TOP OF CASTING
GUT	= GUTTER
RCP	= REINFORCED CONCRETE PIPE
HDPE	= HIGH DENSITY POLYETHYLENE PIPE
SSD	= SUB-SURFACE DRAIN
UD	= UNDERDRAIN
MH	= MANHOLE
STR	= STRUCTURE
RD&UE	= REGULATED DRAIN AND UTILITY EASEMENT
D&UE	= DRAINAGE AND UTILITY EASEMENT
SD&UE	= SANITARY, DRAINAGE, AND UTILITY EASEMENT
W&UE	= WATER AND UTILITY EASEMENT
SE	= SANITARY EASEMENT
SAN	= SANITARY SEWER
HC	= HANDICAP RAMP
ME	= MATCH EXISTING
STM	= STORM SEWER
MPE	= MINIMUM PAD ELEVATION
NP	= NORMAL POOL
ELEV	= ELEVATION
TYP	= TYPICAL
PR	= PROPOSED
EX	= EXISTING
R	= RADIUS
B-B	= BACK TO BACK
ROW	= RIGHT OF WAY
LF	= LINEAR FEET
ARCH.	= ARCHITECT/ARCHITECTUAL
F.F.E.	= FINISH FLOOR ELEVATION

egis

REVISIONS AND ISSUES	DATE	BY
1. ADDENDUM #1	12/1/2025	CPEF

BRIAN A. BULLOCK — REGISTERED — No. 10302366 — STATE OF INDIANA — PROFESSIONAL ENGINEER

12/1/2025

CONSTRUCTION PLANS FOR:
CHANDLER 1.5 MILLION GALLON WATER TOWER
CHANDLER, WARRICK COUNTY, IN
SEC. 14, TWP. 6S, RNG. 9W
TOWN OF CHANDLER UTILITIES
401 E. LINCOLN AVENUE, CHANDLER, IN 47610

GENERAL NOTES

PLAN DATE: 12/1/2025

DESIGN:	CHECK:	DRAWN:
CPEF	BAB	CPEF

PROJECT NO. 240050

SHEET NO. C002

P:\240050-Chandler-Water Tower Design Gallon Tank\06WRD\5 - Drawings\WRD GENERAL NOTES.dwg Tuesday, December 2, 2025 11:28:14 AM

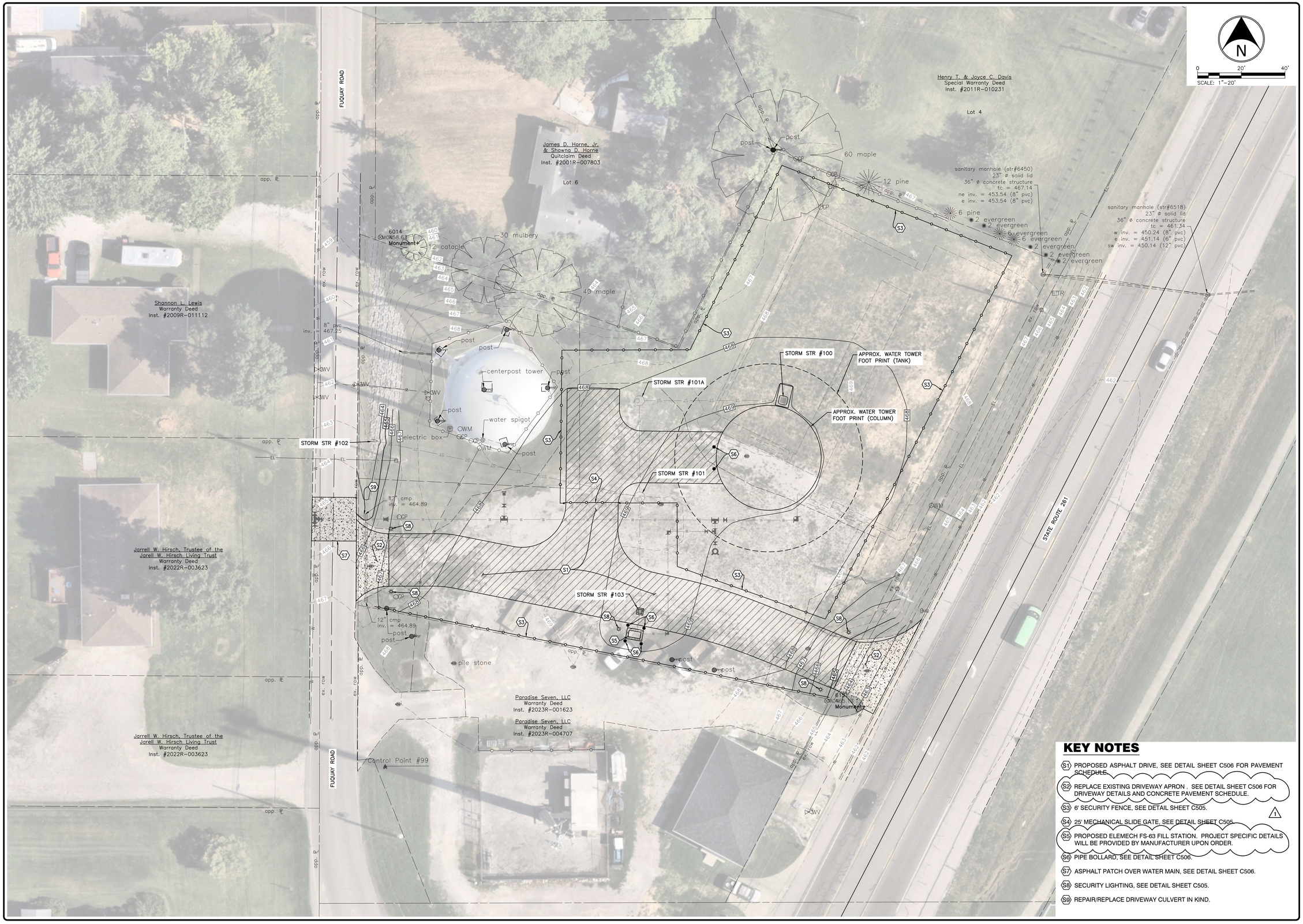

KEY NOTES

- (S1) PROPOSED ASPHALT DRIVE, SEE DETAIL SHEET C506 FOR PAVEMENT SCHEDULE.
- (S2) REPLACE EXISTING DRIVEWAY APRON . SEE DETAIL SHEET C506 FOR DRIVEWAY DETAILS AND CONCRETE PAVEMENT SCHEDULE.
- (S3) 6' SECURITY FENCE, SEE DETAIL SHEET C505.
- (S4) 25' MECHANICAL SLIDE GATE, SEE DETAIL SHEET C505.
- (S5) PROPOSED ELEMECH FS-63 FILL STATION. PROJECT SPECIFIC DETAILS WILL BE PROVIDED BY MANUFACTURER UPON ORDER.
- (S6) PIPE BOLLARD, SEE DETAIL SHEET C506.
- (S7) ASPHALT PATCH OVER WATER MAIN, SEE DETAIL SHEET C506.
- (S8) SECURITY LIGHTING, SEE DETAIL SHEET C505.
- (S9) REPAIR/REPLACE DRIVEWAY CULVERT IN KIND.

egis

REVISIONS AND ISSUES	DATE	BY
1. ADDENDUM #1	12/1/2025	CPEF

BRIAN A. BULLOCK
REGISTERED
No. 0302366
STATE OF INDIANA
PROFESSIONAL ENGINEER
11/1/2025

CONSTRUCTION PLANS FOR:
CHANDLER 1.5 MILLION GALLON WATER TOWER
CHANDLER, WARRICK COUNTY, IN SEC. 14, TWP. 6S, RNG. 9W
TOWN OF CHANDLER UTILITIES
401 E. LINCOLN AVENUE, CHANDLER, IN 47610

TANK SITE PLAN

PLAN DATE: 12/1/2025

DESIGN:	CHECK:	DRAWN:
CPEF	BAB	CPEF

PROJECT NO. 240050

SHEET NO. **C100**

P:\240050-Chandler-Water Tower Design Gallon Tank\06WRD\5 - Drawings\4-X-Refs\240050 XREF BASE SITE.dwg Tuesday, December 2, 2025 10:37:35 AM

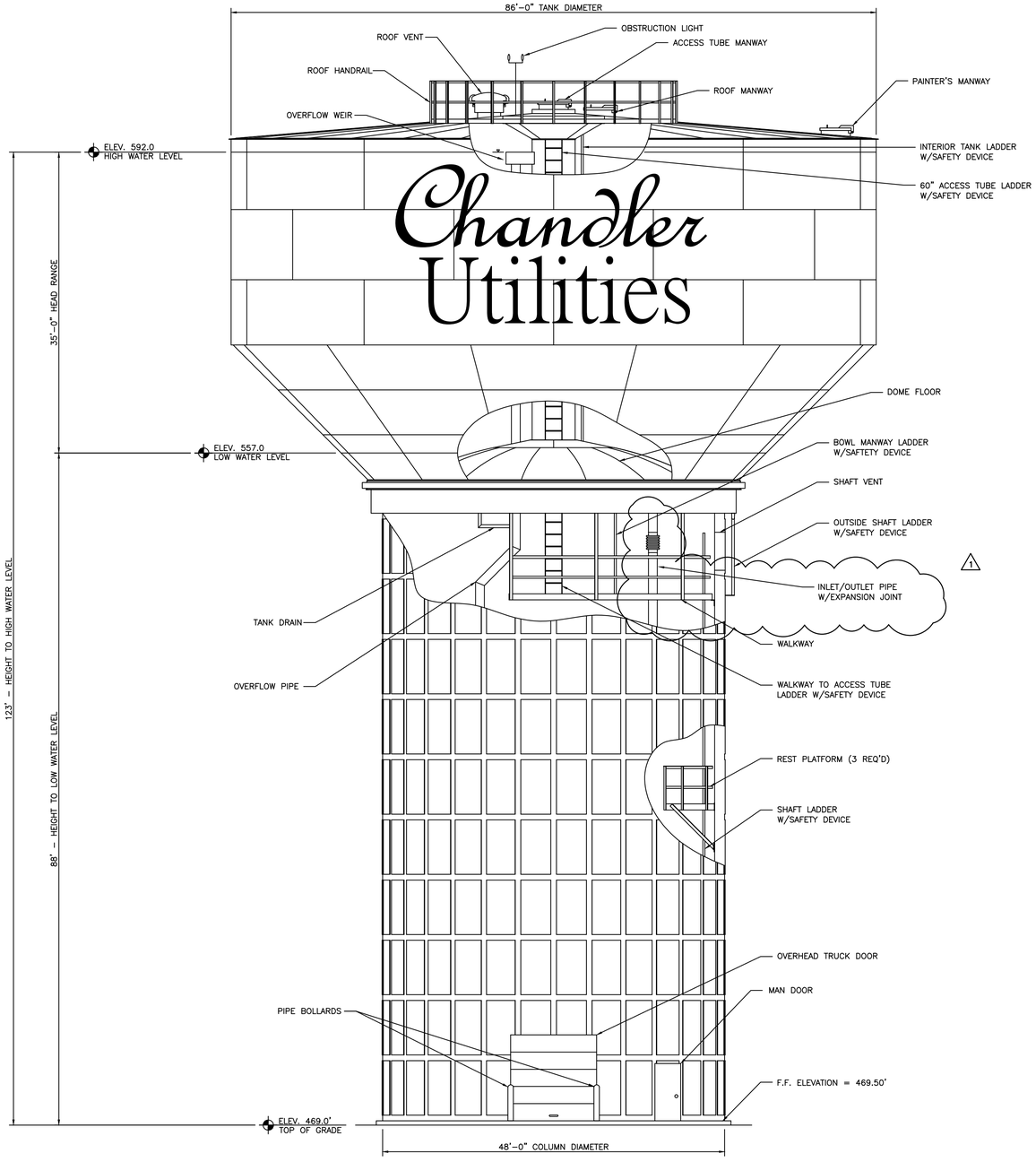

ELEVATION

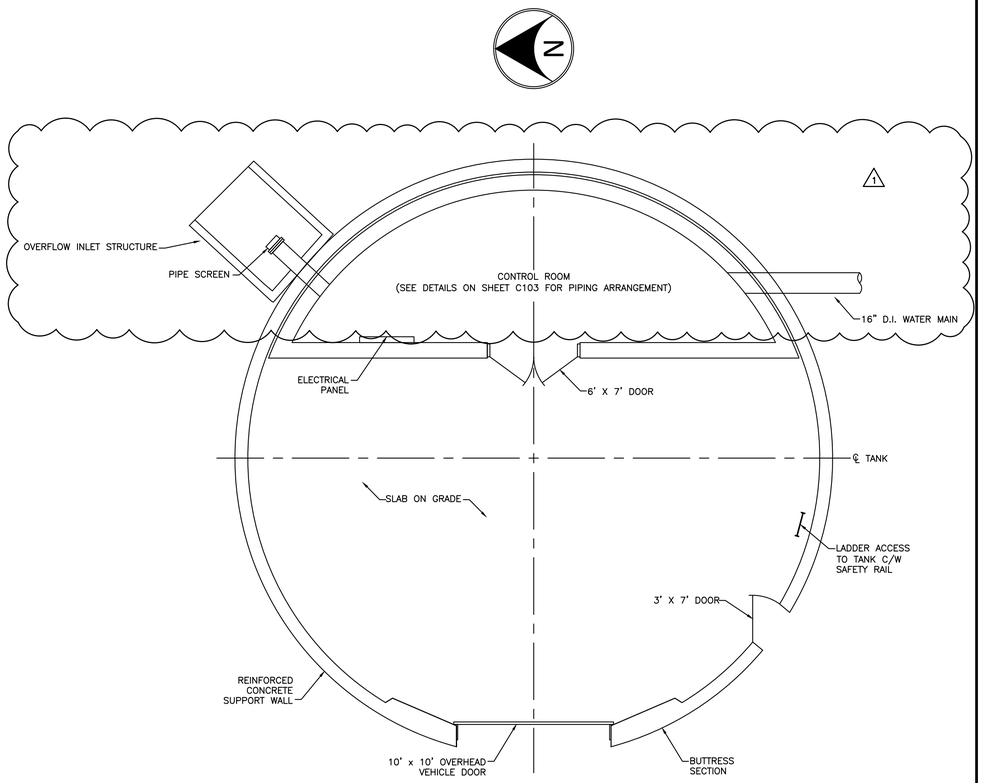

PLAN
N.T.S.

NOTE

ALL FOOTERS & FOUNDATIONS DESIGN CRITERIA, DIMENSIONS, CONCRETE REQUIREMENTS, AND REINFORCING STEEL TO BE DETERMINED BY TANK MANUFACTURER-CONTRACTOR.

EXAMPLE LOGO PROVIDED ON PLANS. ORIENTATION AND FONT STYLES TO BE COORDINATED AT A LATER DATE.

1. DESIGN CRITERIA

1.A. THE TANK AND SUPPORT STRUCTURE SHALL BE DESIGNED, FABRICATED, AND ERECTED IN ACCORDANCE WITH AWWA D107-10 AND THE PROJECT SPECIFICATIONS.
1.B. LOADING CRITERIA:
1.B.A. DESIGN WIND VELOCITY - 100 MPH
1.B.B. DESIGN SNOW LOAD - 25 PSF
1.B.C. MCE SPECTRAL RESPONSE ACCELERATION - 0.2 - SEC PERIOD (S_S) - PER CODE REQUIREMENTS
1.B.D. MCE SPECTRAL RESPONSE ACCELERATION - 1.0 - SEC PERIOD (S_1) - PER CODE REQUIREMENTS

2. MATERIALS

2.A. STEEL PLATE: ASTM A283 OR ASTM A36
2.B. STRUCTURAL SHAPES: ASTM A36
2.C. LADDER RUNGS: ASTM A706

3. GENERAL

3.A. ALL ACCESSORIES SHOWN ON THE ELEVATION DRAWING ARE ROTATED FOR CLARITY.
3.B. ALL LADDERS, LADDER SAFETY DEVICES, PLATFORMS, HANDRAILS, ETC. SHALL CONFORM TO CURRENT OSHA REGULATIONS.
3.C. SURFACE PREPARATION AND COATING REQUIREMENTS SHALL BE IN ACCORDANCE WITH THE PROJECT SPECIFICATIONS.
3.D. THE TANK SHALL BE DISINFECTED IN ACCORDANCE WITH AWWA C652-02.
3.E. MAN DOOR - 3' WIDE X 7' HIGH, HOLLOW METAL DOOR WITH 16 GA. FRAME AND HEAVY DUTY CLOSURE.
3.F. VEHICLE DOOR - 10' WIDE X 10' HIGH ROLLING STEEL WITH 22 GA. GALVANIZED SLATS AND MANUAL CHAIN OPERATOR.
3.G. PROVIDE MONOLITHIC REINFORCED CONCRETE INTERNAL BUTTRESS SECTION ON EACH SIDE OF VEHICLE DOOR. BUTTRESS TO BE MINIMUM 3'-6" WIDE AND 6" THICKER THAN NOMINAL WALL DIMENSION.

4. SLAB ON GRADE

4.A. PROVIDE A 6" THICK 4000 PSI CONCRETE FLOOR ON COMPACTED GRANULAR FILL REINFORCED WITH #4 BARS AT 12" CENTERS EACH WAY.
4.B. PROVIDE 1/2" ISOLATION JOINT BETWEEN FLOOR AND WALL AND AT ALL FLOOR PENETRATIONS. CAP WITH SELF LEVELING SEALANT.
4.C. SAWCUT CONTROL JOINTS 1 1/2" DEEP AT 20 FEET MAXIMUM CENTERS.
4.D. SLOPE SLAB MINIMUM 0.5% TO VEHICLE DOOR FOR DRAINAGE.

egis

REVISIONS AND ISSUES	DATE	BY
1. ADDENDUM #1	12/1/2025	CPEF

BRIAN A. BULLOCK
REGISTERED
No. 0302366
STATE OF INDIANA
PROFESSIONAL ENGINEER
11/1/2025

CONSTRUCTION PLANS FOR:
CHANDLER 1.5 MILLION GALLON WATER TOWER
CHANDLER, WARRICK COUNTY, IN SEC. 14, TWP. 6S, RNG. 9W
TOWN OF CHANDLER UTILITIES
401 E. LINCOLN AVENUE, CHANDLER, IN 47610

TANK DETAILS

PLAN DATE: 12/1/2025

DESIGN:	CHECK:	DRAWN:
CPEF	BAB	CPEF

PROJECT NO. 240050

SHEET NO. C102

P:\240050-Chandler-Water Tower Design Gallon Tank\06WRD\5 - Drawings\4-X-Refs\240050.XREF BASE SITE.dwg Tuesday, December 2, 2025 11:38:29 AM

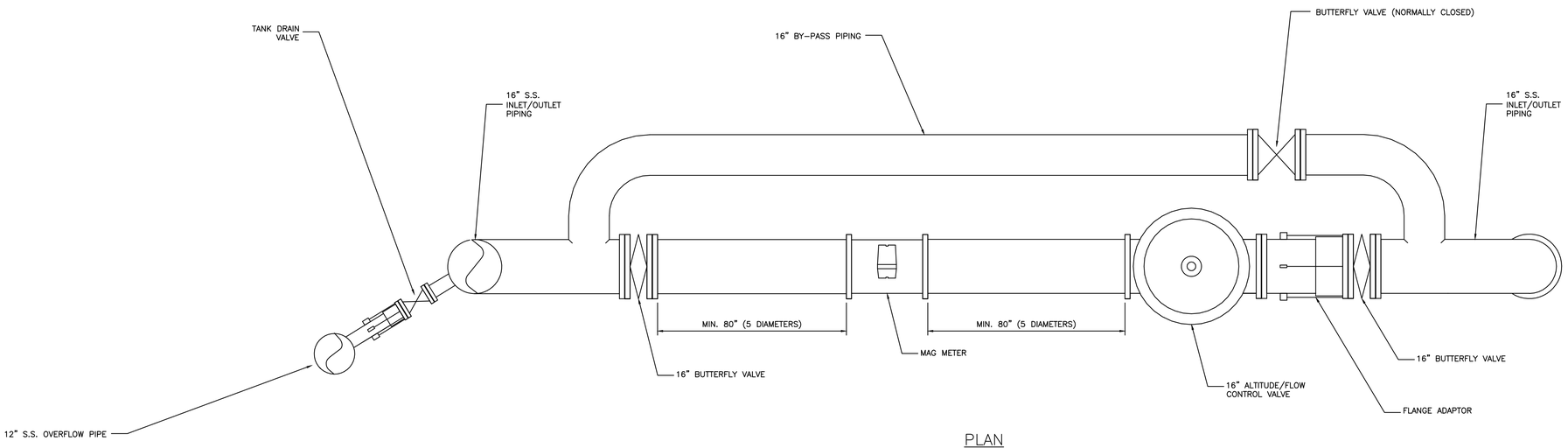

PLAN
N.T.S.

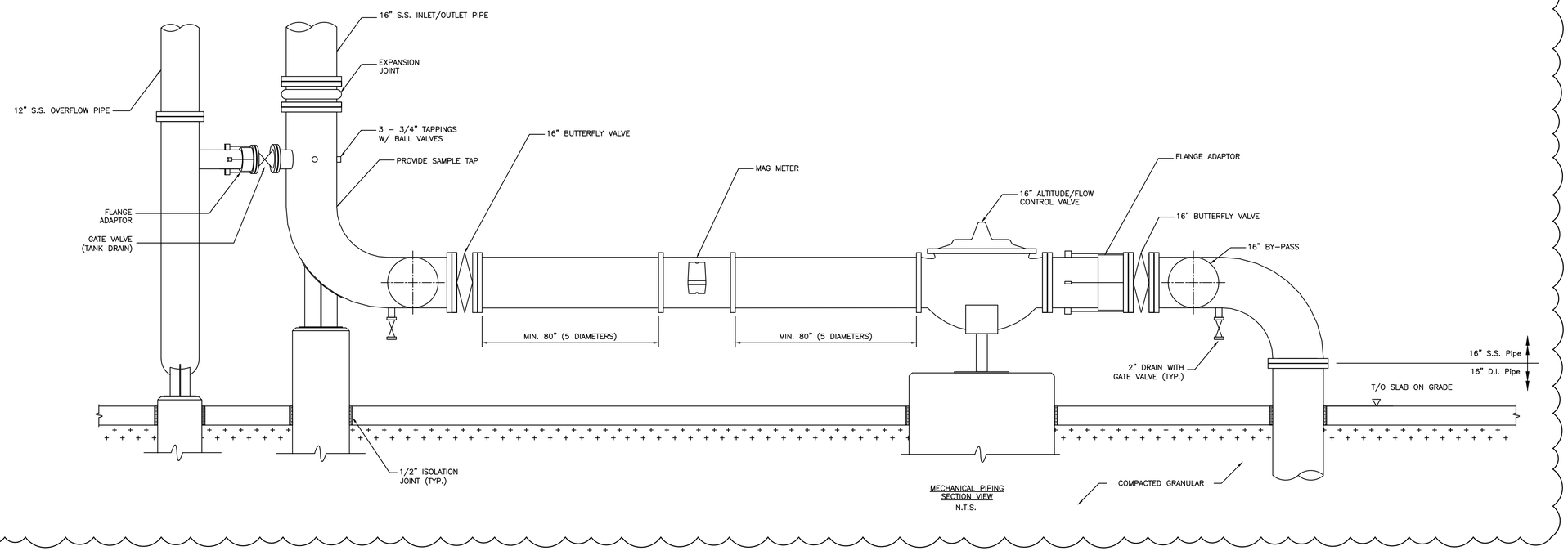

ELEVATION
N.T.S.

MECHANICAL PIPING SECTION VIEW
N.T.S.

NOTE

REFER TO SPECIFICATION 13130 FOR ALL PERTINENT INFORMATION REGARDING THE CONTROL VALVE AND APPLICABLE APPURTENANCES WITHIN THE CONTROL ROOM.

MECHANICAL:

1. PROVIDE EXPANSION JOINT ON INLET/OUTLET RISER TO ACCOMMODATE MAXIMUM POTENTIAL DIFFERENTIAL MOVEMENT.
2. CONNECT RISER AND OVERFLOW WITH A VALVED LATERAL FOR TANK DRAINING.
3. PROVIDE THRUST RESTRAINT AND SUPPORT AS REQUIRED.
4. INSTALL 3 PC. 3/4" TAPPINGS COMPLETE WITH BRONZE BALL VALVE AND PLUG ON INLET/OUTLET PIPE.
5. INLET/OUTLET PIPE TO BE INSULATED AND CLAD WITH ALUMINUM JACKET WHERE REQUIRED FOR FREEZE PROTECTION. SEE SPECIFICATION.

egis

REVISIONS AND ISSUES	DATE	BY
1. ADDENDUM #1	12/1/2025	CPEF

BRIAN A. BULLOCK
REGISTERED
No. 10302366
STATE OF INDIANA
PROFESSIONAL ENGINEER
12/1/2025

CONSTRUCTION PLANS FOR:
CHANDLER 1.5 MILLION GALLON WATER TOWER
CHANDLER, WARRICK COUNTY, IN SEC. 14, TWP. 6S, RNG. 9W
TOWN OF CHANDLER UTILITIES
401 E. LINCOLN AVENUE, CHANDLER, IN 47610

TANK PIPING PLAN DETAILS

PLAN DATE: 12/1/2025

DESIGN:	CHECK:	DRAWN:
CPEF	BAB	CPEF

PROJECT NO. 240050

SHEET NO. C103

P:\240050-Chandler-Water Tower Design Gallon Tank\06WRD\5 - Drawings\4-X-Refs\240050-XREF-BASE SITE.dwg Tuesday, December 2, 2025 11:29:10 AM

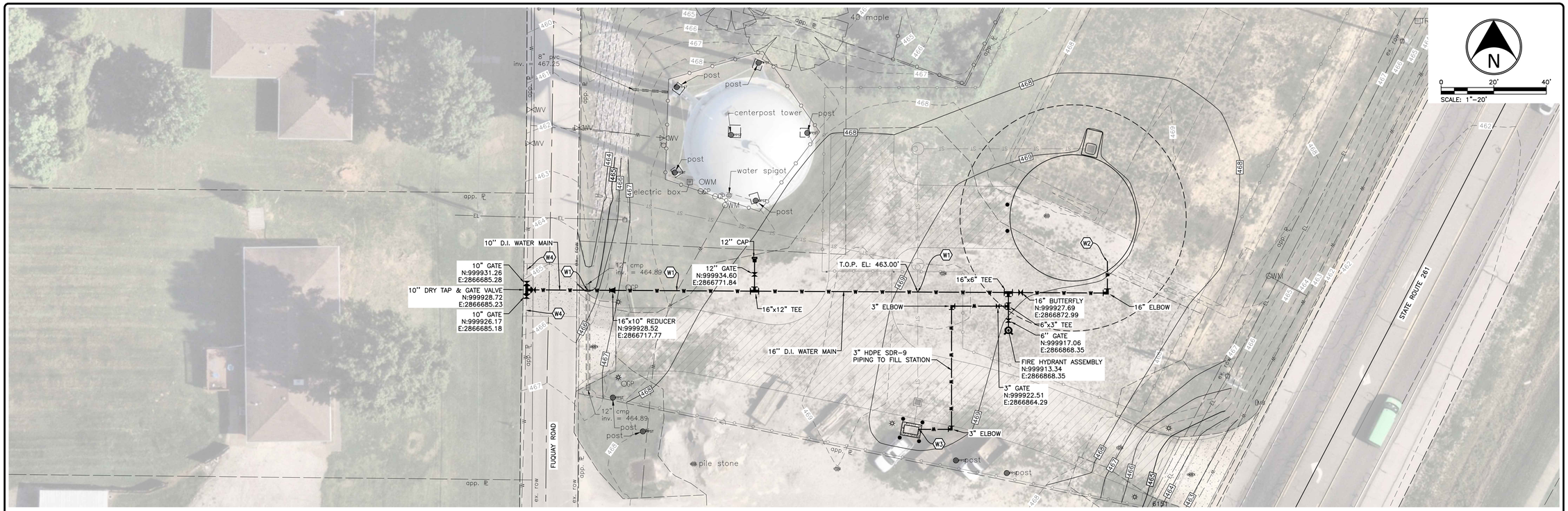

WATER NOTES

1. "T.O.P. EL" REFERS TO TOP OF PIPE ELEVATION OF WATER MAIN AT EACH SEWER CROSSING. ELEVATIONS INDICATE THE MINIMUM DEPTH AT WHICH 18" OF SEPARATION WILL BE MAINTAINED.
2. ALL WATER MAIN SHALL BE DUCTILE IRON PIPE (AWWA C150/C151) UNLESS OTHERWISE NOTED.
3. GRANULAR BACKFILL IS REQUIRED FOR ALL OPEN CUT WATER MAINS AND SERVICES UNDER OR WITHIN 5 FT OF ANY PAVED SURFACES.

KEY NOTES

(W1) UTILITY CROSSING. MAINTAIN REQUIRED SEPARATIONS.

(W2) CONNECT 16" PIPING TO WATER TOWER CONTROL ROOM. REFER TO DETAIL SHEET C103 FOR MORE INFORMATION. △1

(W3) CONNECT 3" PIPING TO FILL STATION. SEE DETAIL SHEET C505 FOR MORE INFORMATION.

(W4) INSTALL HYDRO-STOP. CONSULT SPECIFICATIONS FOR ALLOWABLE TIMES OF ISOLATION AND NOTIFY THE **TOWN OF CHANDLER** BEFORE ISOLATION BEGINS.

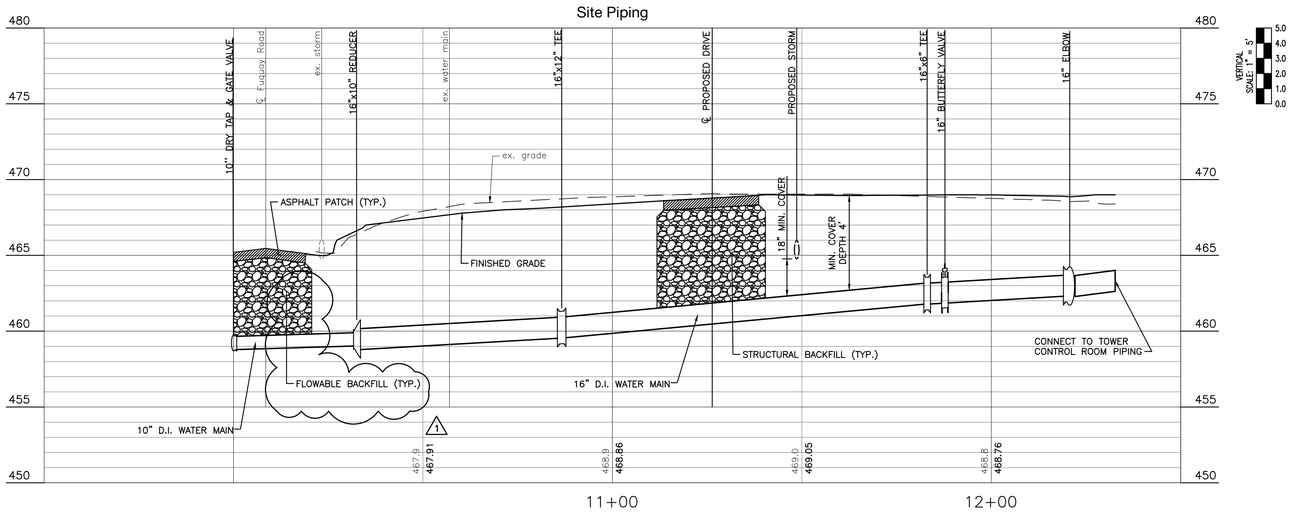

egis

REVISIONS AND ISSUES	DATE	BY
1. ADDENDUM #1	12/1/2025	CPEF

BRIAN A. BULLOCK
REGISTERED
No. 0302366
STATE OF INDIANA
PROFESSIONAL ENGINEER
12/1/2025

CONSTRUCTION PLANS FOR:
CHANDLER 1.5 MILLION GALLON WATER TOWER
CHANDLER, WARRICK COUNTY, IN SEC. 14, TWP. 6S, RNG. 9W
TOWN OF CHANDLER UTILITIES
401 E. LINCOLN AVENUE, CHANDLER, IN 47610

SITE WATER MAIN

PLAN DATE: 12/1/2025

DESIGN:	CHECK:	DRAWN:
CPEF	BAB	CPEF

PROJECT NO. 240050

SHEET NO. C104

P:\240050-Chandler-Water Towe Design Gallon Tank\06WRD\5 - Drawings\240050.SITE PIPING.P&Ps.dwg Tuesday, December 2, 2025 11:05:18 AM

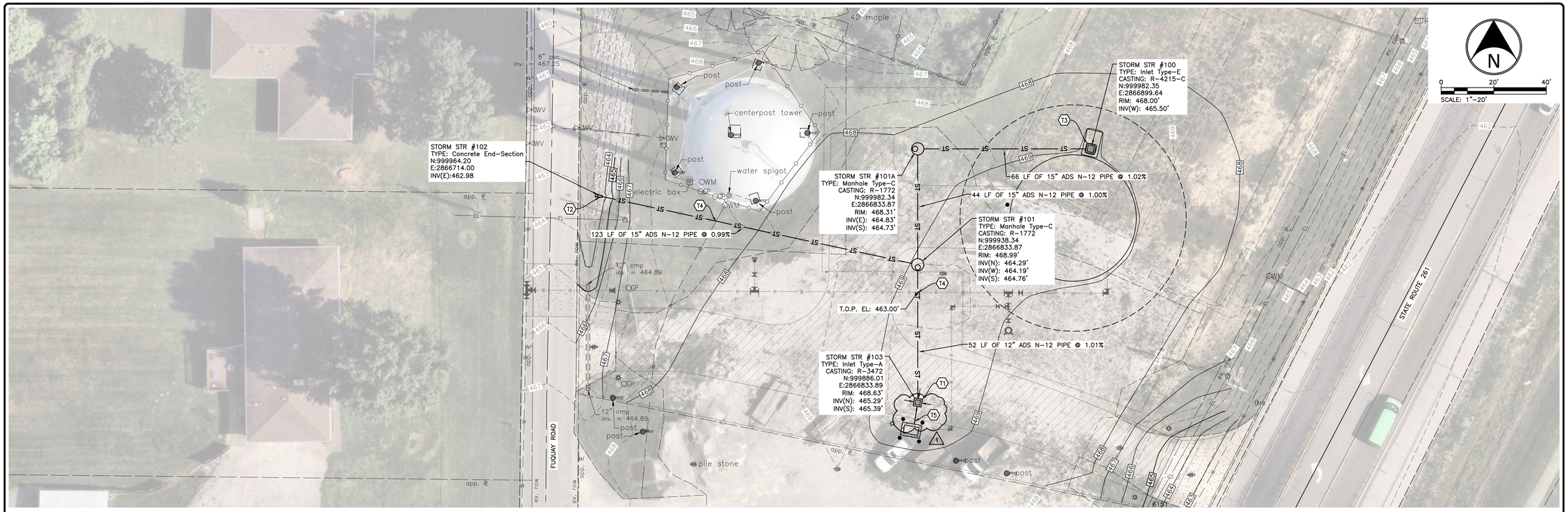

STORM NOTES

1. "T.O.P. EL" REFERS TO TOP OF PIPE ELEVATION OF WATER MAIN AT EACH SEWER CROSSING. ELEVATIONS INDICATE THE MINIMUM DEPTH AT WHICH 18" OF SEPARATION WILL BE MAINTAINED.
2. ALL STORM PIPE SHALL BE ADS N-12 UNLESS OTHERWISE NOTED.

KEY NOTES

(T1) SLOPE TO STRUCTURE.

(T2) REUSE EXISTING RIP-RAP, IF POSSIBLE. ADD ADDITIONAL RIP-RAP AROUND OUTLET AS NEEDED TO MEET OUTLET PROTECTION REQUIREMENTS. SEE SHEET C351 FOR MORE DETAIL.

(T3) OVERFLOW INLET STRUCTURE, SEE DETAIL SHEET C503.

(T4) UTILITY CROSSING. MAINTAIN REQUIRED SEPARATIONS.

(T5) CONNECT INTERNAL FILL STATION DRAIN TO STRUCTURE WITH SDR-26 PVC PIPING. SIZE TO BE DETERMINED IN COORDINATION WITH MANUFACTURER. (1)

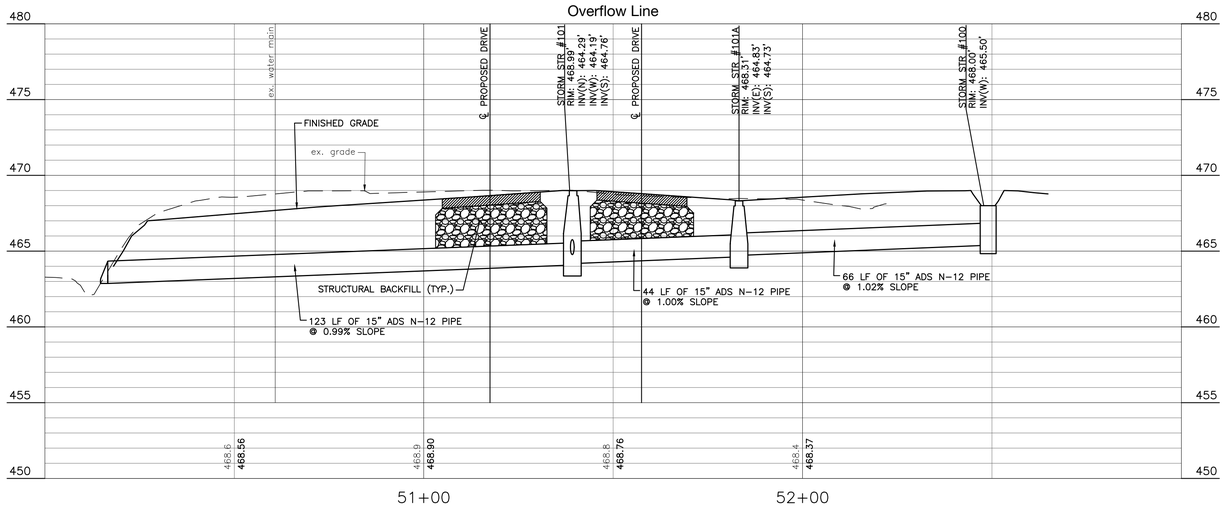

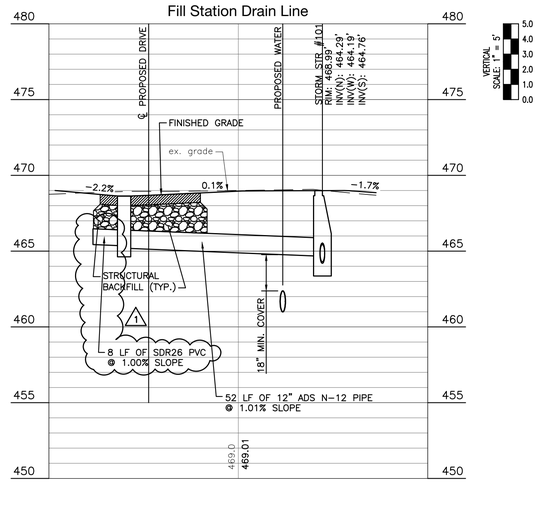

egis

REVISIONS AND ISSUES	DATE	BY
1. ADDENDUM #1	12/1/2025	CPEF

BRIAN A. BULLOCK
REGISTERED
No. 0302366
STATE OF INDIANA
PROFESSIONAL ENGINEER
12/1/2025

CONSTRUCTION PLANS FOR:
CHANDLER 1.5 MILLION GALLON WATER TOWER
CHANDLER, WARRICK COUNTY, IN SEC. 14, TWP. 6S, RNG. 9W
TOWN OF CHANDLER UTILITIES
401 E. LINCOLN AVENUE, CHANDLER, IN 47610

SITE DRAINAGE

PLAN DATE: 12/1/2025

DESIGN:	CHECK:	DRAWN:
CPEF	BAB	CPEF

PROJECT NO. 240050

SHEET NO. C105

P:\240050-Chandler-Water Towe Design Gallon Tank\06WRD\5 - Drawings\240050.SITE PIPING.P&Ps.dwg Tuesday, December 2, 2025 10:47:57 AM

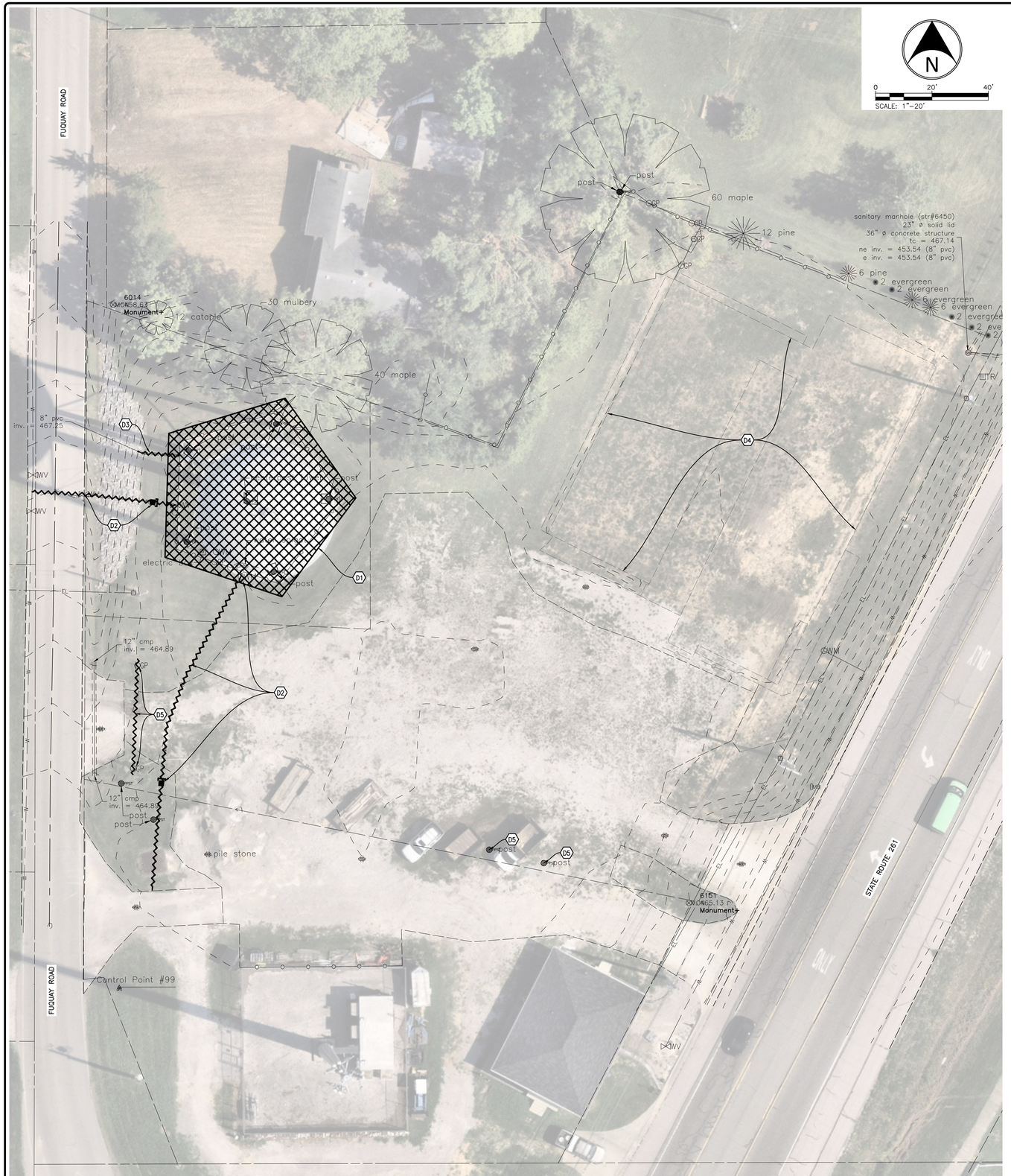

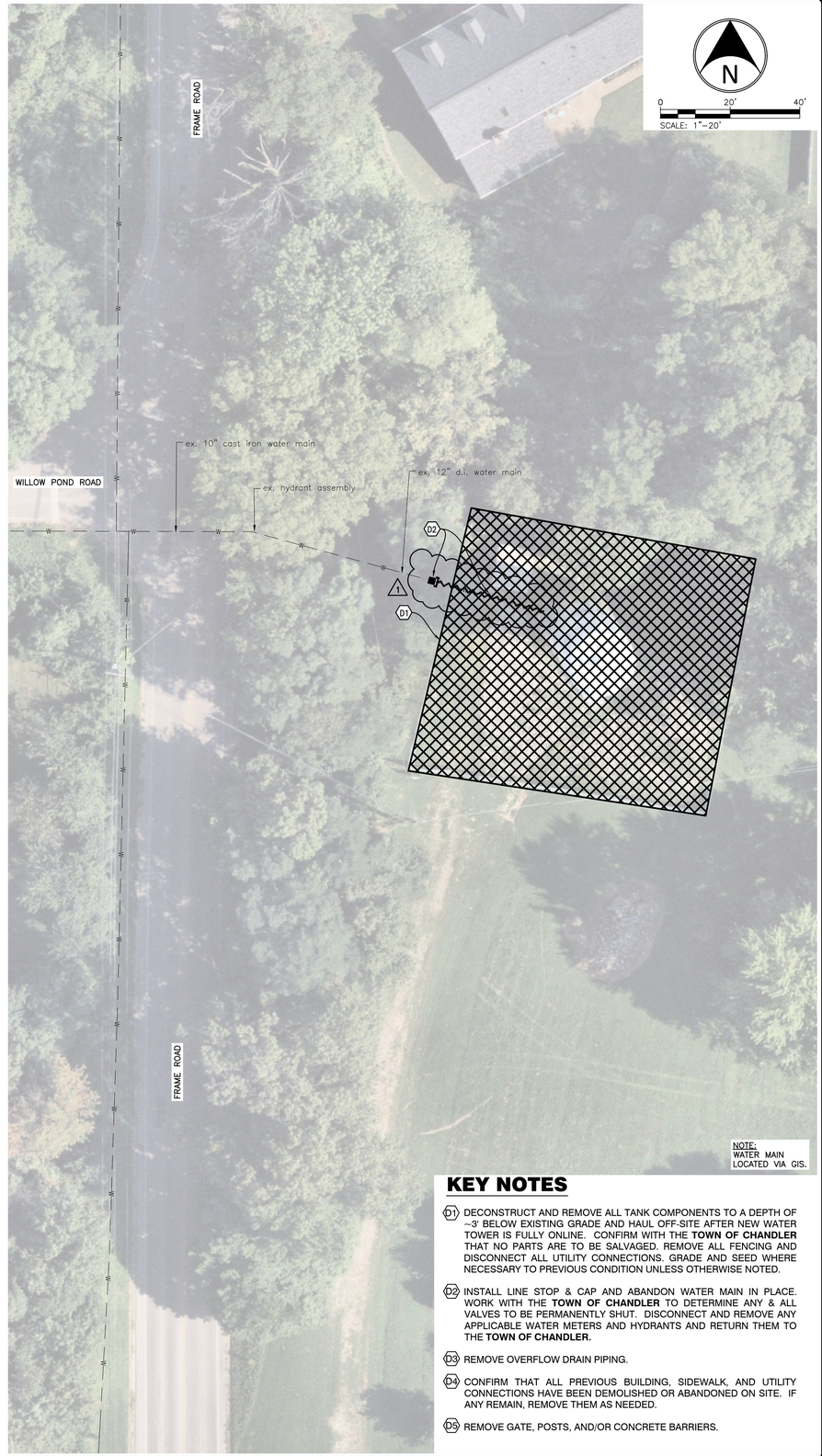

KEY NOTES

D1 DECONSTRUCT AND REMOVE ALL TANK COMPONENTS TO A DEPTH OF –3' BELOW EXISTING GRADE AND HAUL OFF-SITE AFTER NEW WATER TOWER IS FULLY ONLINE. CONFIRM WITH THE **TOWN OF CHANDLER** THAT NO PARTS ARE TO BE SALVAGED. REMOVE ALL FENCING AND DISCONNECT ALL UTILITY CONNECTIONS. GRADE AND SEED WHERE NECESSARY TO PREVIOUS CONDITION UNLESS OTHERWISE NOTED.

D2 INSTALL LINE STOP & CAP AND ABANDON WATER MAIN IN PLACE. WORK WITH THE **TOWN OF CHANDLER** TO DETERMINE ANY & ALL VALVES TO BE PERMANENTLY SHUT. DISCONNECT AND REMOVE ANY APPLICABLE WATER METERS AND HYDRANTS AND RETURN THEM TO THE **TOWN OF CHANDLER.**

D3 REMOVE OVERFLOW DRAIN PIPING.

D4 CONFIRM THAT ALL PREVIOUS BUILDING, SIDEWALK, AND UTILITY CONNECTIONS HAVE BEEN DEMOLISHED OR ABANDONED ON SITE. IF ANY REMAIN, REMOVE THEM AS NEEDED.

D5 REMOVE GATE, POSTS, AND/OR CONCRETE BARRIERS.

egis

REVISIONS AND ISSUES	DATE	BY
1. ADDENDUM #1	12/1/2025	CPEF

BRIAN A. BULLOCK
REGISTERED
No. 0302366
STATE OF INDIANA
PROFESSIONAL ENGINEER
11/1/2025

CONSTRUCTION PLANS FOR:
CHANDLER 1.5 MILLION GALLON WATER TOWER
CHANDLER, WARRICK COUNTY, IN SEC. 14, TWP. 6S, RNG. 9W
TOWN OF CHANDLER UTILITIES
401 E. LINCOLN AVENUE, CHANDLER, IN 47610

PARADISE & FRAME SITE DEMOLITION PLANS

PLAN DATE: 12/1/2025

DESIGN:	CHECK:	DRAWN:
CPEF	BAB	CPEF

PROJECT NO. 240050

SHEET NO. **C200**

P:\240050-Chandler-Water Tower Design Gallon Tank\06WRD\5 - Drawings\240050.SITE DEMOLITION PLAN.dwg Tuesday, December 2, 2025 11:07:30 AM



M.O.T. NOTES

1. PLEASE REFER TO THE PERMITS SECTION OF THE SPECIFICATIONS TO SEE REQUIREMENTS OF THE RIGHT-OF-WAY PERMIT WITH **WARRICK COUNTY** FOR SIGNAGE POSTING AND NOTIFICATION TIMES.
2. THIS M.O.T. PLAN SHALL BE USED FOR THE FOLLOWING ROAD CLOSURES:
   2.1. ROAD CUT TO CONSTRUCT CONNECTION TO EXISTING WATER MAIN.
   2.2. DEMOLITION OF EXISTING PARADISE WATER TOWER .
3. SEE DETAIL MOT-05 ON C507 FOR MORE INFORMATION ON LOCAL DETOUR SIGN PLACEMENT.
4. SEE DETAIL SHEETS C507 & C508 FOR MORE INFORMATION ON ADDITIONAL MAINTENANCE OF TRAFFIC PLAN REQUIREMENTS.
5. FOR FULL INSTRUCTIONS, VISIT THE **IMUTCD** MANUAL.

1

egis

REVISIONS AND ISSUES	DATE	BY
1. ADDENDUM #1	12/1/2025	CPEF

BRIAN A. BULLOCK
REGISTERED
No. 10302366
STATE OF INDIANA
PROFESSIONAL ENGINEER
12/1/2025

CONSTRUCTION PLANS FOR:
CHANDLER 1.5 MILLION GALLON WATER TOWER
CHANDLER, WARRICK COUNTY, IN SEC. 14, TWP. 6S, RNG. 9W
TOWN OF CHANDLER UTILITIES
401 E. LINCOLN AVENUE, CHANDLER, IN 47610

MAINETNANCE OF TRAFFIC PLAN

PLAN DATE: 12/1/2025

DESIGN:	CHECK:	DRAWN:
CPEF	BAB	CPEF

PROJECT NO. 240050

SHEET NO. C400

P:\240050-Chandler-Water Tower Design Gallon Tank\06WRD\5 - Drawings\240050 MOT PLAN.dwg Tuesday, December 2, 2025 11:07:56 AM

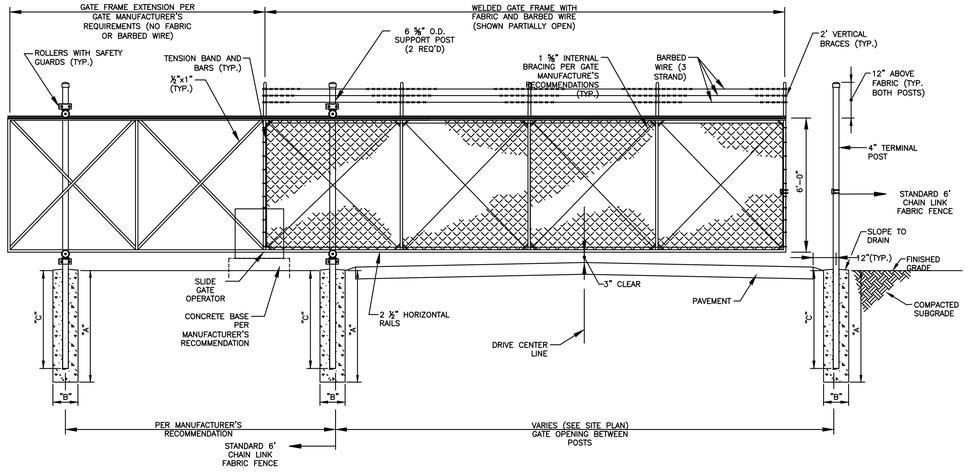

NOTE:
1. SEE DRAWINGS FOR DIRECTION OF OPENING.
2. DETAIL DOES NOT SHOW STANDARD FENCE FOR CLARITY.

egis

HORIZONTAL SLIDE GATE

EXHIBIT:	Road-12
SCALE:	NTS
DATE:	11/2024

DIMENSION	LINE	CORNER & GATE POST
A	3'-6"	4'-6"
B	10" ø	12" ø
ø	2" O.D.	VARIES PER SPEC.

NOTES:
1. ALL TERMINAL POSTS SHALL BE HORIZONTALLY BRACED WITH 1-1/4" OUTSIDE DIAMETER PIPE BRACING UNITS EXTENDING FROM TERMINAL POSTS TO ADJACENT LINE POSTS AT MID-HEIGHT OF FENCE FABRIC.

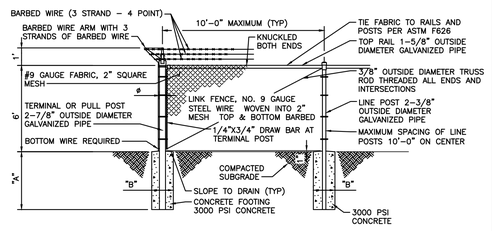

egis

6' CHAIN LINK FENCE

EXHIBIT:	Road-10
SCALE:	NTS
DATE:	11/2024

P:\240050-Chandler-Water Tower Design Gallon Tank\06WRD\5 - Drawings\WRD STANDARD DETAILS.dwg December 2, 2025

For Submittal Only

NLS LIGHTING
701 Ringwelt Pl., Corona, CA 90746
PH. 310-241-2037

SUBMITTAL NO.:	REV.	DATE:
24N-0288	C	07/30/24

PROJECT:
Town of Chandler, IN

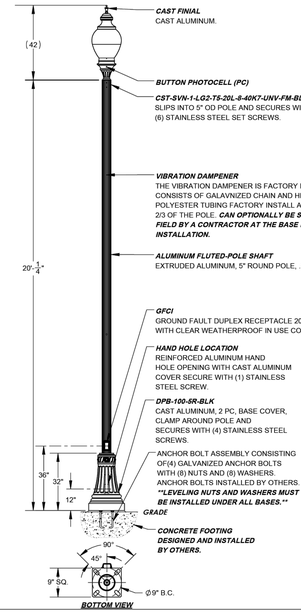

CAST FINIAL
CAST ALUMINUM.

BUTTON PHOTOCELL (PC)

CST-SVN-1-LG2-T5-20L-8-40K7-UNV-FM-BLK-PC-FIN △1
SLIPS INTO 5" OD POLE AND SECURES WITH (6) STAINLESS STEEL SET SCREWS.

△2 RSFF-20-SR-188-RSC-ND-BLK-3430-GF120A-VD DPB-100-SR-BLK

VIBRATION DAMPENER
THE VIBRATION DAMPENER IS FACTORY INSTALLED CONSISTS OF GALAVNIZED CHAIN AND HEAVY DUTY POLYESTER TUBING FACTORY INSTALL AT THE BOTTOM 2/3 OF THE POLE. ***CAN OPTIONALLY BE SECURED IN THE FIELD BY A CONTRACTOR AT THE BASE DURING INSTALLATION.***

ALUMINUM FLUTED-POLE SHAFT
EXTRUDED ALUMINUM, 5° ROUND POLE, .188" WALL

GFCI
GROUND FAULT DUPLEX RECEPTACLE 20A, WITH CLEAR WEATHERPROOF IN USE COVER.

HAND HOLE LOCATION
REINFORCED ALUMINUM HAND HOLE OPENING WITH CAST ALUMINUM COVER SECURE WITH (1) STAINLESS STEEL SCREW.

DPB-100-SR-BLK
CAST ALUMINUM, 2 PC, BASE COVER, CLAMP AROUND POLE AND SECURES WITH (4) STAINLESS STEEL SCREWS.

ANCHOR BOLT ASSEMBLY CONSISTING OF(4) GALVANIZED ANCHOR BOLTS WITH (8) NUTS AND (8) WASHERS. ANCHOR BOLTS INSTALLED BY OTHERS. ***"LEVELING NUTS AND WASHERS MUST BE INSTALLED UNDER ALL BASES."***

GRADE

CONCRETE FOOTING DESIGNED AND INSTALLED BY OTHERS.

CUSTOMER APPROVAL NEEDED PRIOR TO SHIPMENT OF PRODUCT
X_____

DATE 07/07/24 DRAWN AP

SOLD TO:

PO#:

TYPE:

CATALOGUE NUMBER
CST-SVN-1-LG2-T5-20L-8-40K7-UNV-FM-BLK-PC-FIN
RSFF-20-SR-188-RSC-ND-BLK-3430-GF120A-VD
DPB-100-SR-BLK

FINISH: POWDER COAT
COLOR: BLK

OPTIC SYSTEM: T5-20L-40K7

VOLTAGE: 120-277

ANCHOR BOLTS:
QTY: 4
SIZE: 3/4" X 30"3 4"
BOLT CIRCLE: 9"
BOLT PROJECTION" 3 1/2"

WARNING: THIS FIXTURE MUST BE GROUNDED IN ACCORDANCE WITH LOCAL ELECTRICAL CODES OR THE NATIONAL ELECTRICAL CODE. FAILURE TO DO SO MAY RESULT IN SERIOUS PERSONAL INJURY.

THE STRUCTURAL INTEGRITY REGARDING THE POLE AND THE FOUNDATION TO BE REVIEWED AND APPROVED BY THE LOCAL STRUCTURAL ENGINEER PRIOR TO INSTALLATION.

CAUTION:
INSTALLATION OF POLES WITHOUT LUMINAIR(S) WILL COMPROMISE POLE STRENGTH. ANT ACCESSORIES ATTACHED TO THE POLE, OR OTHER MODIFICATIONS DONE IN THE FIELD, WILL COMPROMISE THE POLE STRENGTH AND MAY RESULT IN POLE FAILURE. WIND LOAD EVALUATIONS AND PROVISIONS FOR APPENDAGES SUCH AS BANNER ARMS, SIGNAGE, CAMERA, ECT., MUST BE EVALUATED AND APPROVED BY THE FACTORY PRIOR TO PLACING AN ORDER.

IN THE EVENT OF A DISCREPANY OF LOGIC AND DRAWINGS, THE DRAWING DETAILS AND CALL OUTS TAKE PRECEDENCE OVER THE CATALOG LOGIC FOR ALL CUSTOM SPECIFICATIONS. PLEASE VERIFY WITH YOUR NLS QUOTATIONS PERSON FOR VALIDITY OF LOGIC AND DRAWING BEFORE SINGNING.

egis

REVISIONS AND ISSUES	DATE	BY
1. ADDENDUM #1	12/1/2025	CPEF

BRIAN A. BULLOCK
REGISTERED
No. 0302366
STATE OF INDIANA
PROFESSIONAL ENGINEER
12/1/2025

CONSTRUCTION PLANS FOR:
CHANDLER 1.5 MILLION GALLON WATER TOWER
CHANDLER, WARRICK COUNTY, IN SEC. 14, TWP. 6S, RNG. 9W
TOWN OF CHANDLER UTILITIES
401 E. LINCOLN AVENUE, CHANDLER, IN 47610

SITE DETAILS

PLAN DATE: **12/1/2025**

DESIGN:	CHECK:	DRAWN:
CPEF	BAB	CPEF

PROJECT NO. **240050**

SHEET NO. **C505**

P:\240050-Chandler-Water Tower Design Gallon Tank\06WRD\5 - Drawings\WRD STANDARD DETAILS.dwg Tuesday, December 2, 2025 10:59:11 AM

△1

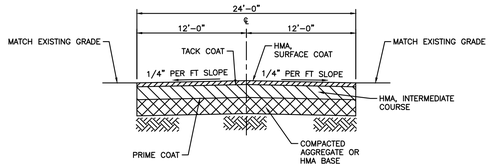

PAVEMENT TYPE	BASE COURSE	INTERMEDIATE COURSE	SURFACE COURSE	TOTAL THICKNESS	DESIGN MIX
~~SIDEWALKS AND PATHWAYS~~	~~330#/SY(3.0") OR 4" AGGREGATE BASE~~	~~165#/SY(1.5")~~	~~165#/SY(1.5")~~	~~6.5"~~	~~TYPE B~~
~~RESIDENTIAL DRIVEWAYS~~	~~385#/SY(3.5") OR 6" AGGREGATE BASE~~	~~385#/SY(3.5")~~	~~165#/SY(1.5")~~	~~8.5"~~	~~TYPE B~~
LOCAL ROADS, ALLEYS, AND COMMERCIAL DRIVEWAYS	605#/SY(5.5") OR 8" AGGREGATE BASE	385#/SY3.5")	165#/SY(1.5")	10.5"	TYPE B
~~COLLECTOR AND ARTERIAL ROADS~~	~~770#/SY(7.0") OR 8" AGGREGATE BASE~~	~~385#/SY(3.5")~~	~~165#/SY(1.5")~~	~~12.0"~~	~~TYPE C~~
~~HEAVY DUTY ROADS AND HIGHWAYS~~	~~6" AGGREGATE BASE~~	~~990#/SY(9.0")~~	~~110#/SY(1.0")~~	~~16.0"~~	~~TYPE D~~

P:\240050-Chandler-Water Tower Design Gallon Tank\06WRD\5 - Drawings\WRD STANDARD DETAILS.dwg December 2, 2025

egis | **TYPICAL ASPHALT ROAD SECTION** | EXHIBIT: Road-09 | SCALE: NTS | DATE: 11/2024

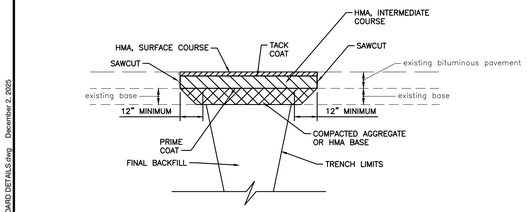

PAVEMENT TYPE	BASE COURSE	INTERMEDIATE COURSE	SURFACE COURSE	TOTAL THICKNESS	DESIGN MIX
~~SIDEWALKS AND PATHWAYS~~	~~330#/SY(3.0") OR 4" AGGREGATE BASE~~	~~165#/SY(1.5")~~	~~165#/SY(1.5")~~	~~6.5"~~	~~TYPE B~~
~~RESIDENTIAL DRIVEWAYS~~	~~385#/SY(3.5") OR 6" AGGREGATE BASE~~	~~385#/SY(3.5")~~	~~165#/SY(1.5")~~	~~8.5"~~	~~TYPE B~~
LOCAL ROADS, ALLEYS, AND COMMERCIAL DRIVEWAYS	605#/SY(5.5") OR 8" AGGREGATE BASE	385#/SY3.5")	165#/SY(1.5")	10.5"	TYPE B
~~COLLECTOR AND ARTERIAL ROADS~~	~~770#/SY(7.0") OR 8" AGGREGATE BASE~~	~~385#/SY(3.5")~~	~~165#/SY(1.5")~~	~~12.0"~~	~~TYPE C~~
~~HEAVY DUTY ROADS AND HIGHWAYS~~	~~6" AGGREGATE BASE~~	~~990#/SY(9.0")~~	~~110#/SY(1.0")~~	~~16.0"~~	~~TYPE D~~

P:\240050-Chandler-Water Tower Design Gallon Tank\06WRD\5 - Drawings\WRD STANDARD DETAILS.dwg December 2, 2025

egis | **BITUMINOUS PAVEMENT** | EXHIBIT: Road-02 | SCALE: NTS | DATE: 11/2024

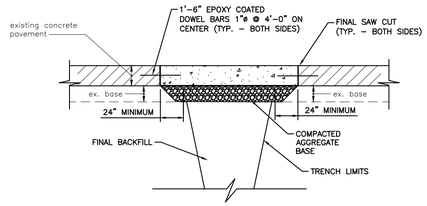

DISTURBED AREA TYPE	COMPACTED AGGREGATE BASE	CONCRETE PAVEMENT
~~SIDEWALK (SEE NOTE 1)~~	~~4"~~	~~4"~~
~~RESIDENTIAL DRIVE (SEE NOTE 1)~~	~~6"~~	~~6"~~
ALLEY/COMMERCIAL DRIVE	6"	9"
~~ROAD~~	~~6"~~	~~MATCH EX. (MIN. 8")~~

1

NOTES:
1. DOWELS ARE NOT REQUIRED FOR SIDEWALKS AND RESIDENTIAL DRIVES

P:\240050-Chandler-Water Tower Design Gallon Tank\06WRD\5 - Drawings\WRD STANDARD DETAILS.dwg December 2, 2025

egis | **CONCRETE PAVEMENT** | EXHIBIT: Road-03 | SCALE: NTS | DATE: 11/2024

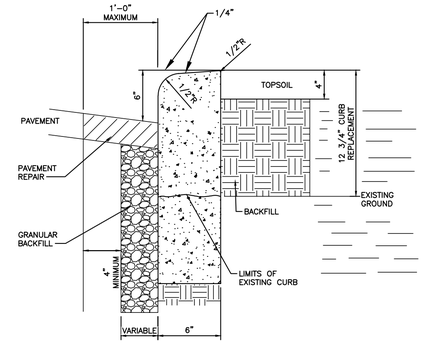

NOTES:
1. CONTRACTION JOINTS SHALL BE PLACED EVERY 20' MAXIMUM TO A DEPTH OF 1–1/2".
2. FULL DEPTH SEPARATORS ARE NOT PERMITTED EXCEPT AT INLET.
3. EXPANSION JOINTS TO BE PLACED AT 100' MINIMUM.

P:\240050-Chandler-Water Tower Design Gallon Tank\06WRD\5 - Drawings\WRD STANDARD DETAILS.dwg December 2, 2025

egis | **6" STRAIGHT CURB REPAIR** | EXHIBIT: Road-05 | SCALE: NTS | DATE: 11/2024

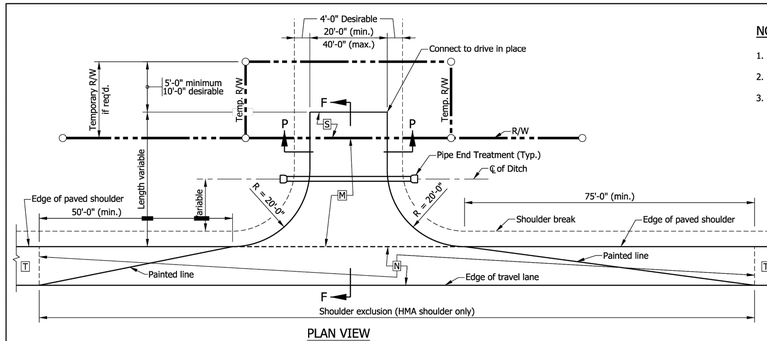

PLAN VIEW
(PAVED SHOULDER 8'-0" FEET OR GREATER IN WIDTH)

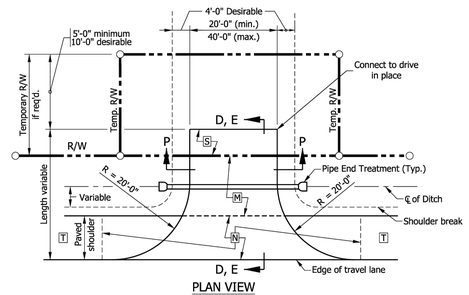

PLAN VIEW
(PAVED SHOULDER LESS THAN 8'-0" IN WIDTH OR UNPAVED SHOULDER)

NOTES:

1. See Standard Drawing E 610-DRIV-11 for Sections D-D, E-E and F-F.
2. See Standard Drawing E 610-DRIV-10 for Section P-P.
3. For PCCP Drives, see Standard Drawing E 610-DRIV-14 for joint placement details.

LEGEND

- [M] HMA for Approaches, Type B, 165 lbs/syd HMA Surface, Type B, on 275 lbs/syd HMA Intermediate, Type B, on 660 lbs/syd HMA Base, Type B, on Subgrade Treatment Type II (6 in. Coarse Aggregate No. 53), on Geogrid, Type 1B
  or
  PCCP for Approaches, 9 in., on Dense Graded Subbase, 6 in., on Geogrid Type 1B on Subgrade Treatment Type II (6 in. Coarse Aggregate No. 53)
- [N] The greater thickness of either the drive [M] or the paved shoulder [T] section.
- [S] For type and thickness equivalent to surface in place, see plans.
- [T] Plan shoulder section.

INDIANA DEPARTMENT OF TRANSPORTATION	
CLASS IV DRIVE (COMMERCIAL)	
SEPTEMBER 2019	
STANDARD DRAWING NO. E 610-DRIV-05	
REGISTERED ELIZABETH W. PHILLIPS No. 10200124 STATE OF INDIANA PROFESSIONAL ENGINEER	5/29/2019 DESIGN STANDARDS ENGINEER DATE
	6/5/2019 CHIEF ENGINEER DATE

P:\240050-Chandler-Water Tower Design Gallon Tank\06WRD\5 - Drawings\WRD STANDARD DETAILS.dwg Tuesday, December 2, 2025 11:19:59 AM

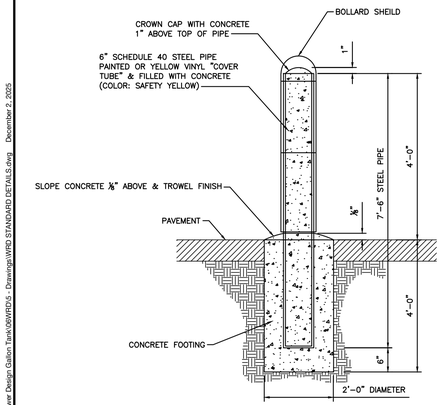

P:\240050-Chandler-Water Tower Design Gallon Tank\06WRD\5 - Drawings\WRD STANDARD DETAILS.dwg December 2, 2025

egis | **PIPE BOLLARD WITH SHIELD** | EXHIBIT: Road-11 | SCALE: NTS | DATE: 11/2024

egis

BY	DATE	REVISIONS AND ISSUES
CPEF	12/1/2025	1. ADDENDUM #1

BRIAN A. BULLOCK REGISTERED No. 10302366 STATE OF INDIANA PROFESSIONAL ENGINEER
12/1/2025

CONSTRUCTION PLANS FOR:
CHANDLER 1.5 MILLION GALLON WATER TOWER
CHANDLER, WARRICK COUNTY, IN SEC. 14, TWP. 6S, RNG. 9W
TOWN OF CHANDLER UTILITIES
401 E. LINCOLN AVENUE, CHANDLER, IN 47610

ROAD DETAILS

PLAN DATE: 12/1/2025
DESIGN: CPEF | CHECK: BAB | DRAWN: CPEF
PROJECT NO. 240050
SHEET NO. C506

PROJECT MANUAL

FOR:

Chandler 1.5 Million Gallon Water Tower

CHANDLER UTILITIES
Warrick County, Indiana

OWNER
TOWN OF CHANDLER
401 E. LINCOLN AVENUE
CHANDLER, INDIANA 47610

PREPARED BY:
EGIS BLN USA, INC.
8320 CRAIG STREET
INDIANAPOLIS, INDIANA 46250
PHONE: (317) 849-5832
FAX: (317) 841-4280

EGIS PROJECT NO: 240050

~~November 2025~~
December 2025

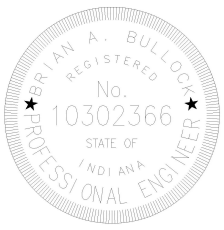

Brian Bullock, P.E.

DIVISION 0

PROCUREMENT AND CONTRACTING REQUIREMENTS

Egis Proj. No. 240050
OWNER Town of Chander Utilities
PROJECT NAME Chandler 1.5 Million Gallon Water Tower

Section 00011

Table of Contents

Section	Title
DIVISION 0 – PROCUREMENT AND CONTRACTING REQUIREMENTS	
	Introductory Information
00010	Project Title Page
00011	Table of Contents
	Solicitation
00100	Advertisement for Bids
	Instructions for Procurement
00200	Instructions to Bidders
	Available Information
00310	Geotechnical Data
00311	Permits
	Procurement Forms and Supplements
00410	Bid Form
00411	Indiana State Board of Accounts - Form 96
00431	Bid Bond Form
00434	Products List Form
00435	Subcontractor's List Form
00451	Qualifications Statement
	Contracting Requirements
00510	Notice of Award Form
00520	Agreement Form
00550	Notice to Proceed Form
00570	Escrow Agreement Form
	Bond Forms
00610	Performance Bond Form
00615	Payment Bond Form
	Certificates and Other Forms
00620	Certificates of Insurance
00622	Application for Payment Form
	Modification Forms
00631	Change Order Form
00632	Work Change Directive Form
00633	Change Order Request Form
	Clarification and Administrative Forms
00641	RFI Form
00642	Nonconforming Work Notice Form
00643	Substitution Request Form (After the Bidding Phase)
00644	Submittal Transmittal Form
00646	Schedule of Submittals Form
	Closeout Forms
00651	Certificate of Substantial Completion Form
00652	Punch List Form
00653	Certificate of Compliance by Contractor Form
	Conditions of the Contract
00700	General Conditions

Table of Contents

Section	Title
00800	Supplementary Conditions
00831	E-Verify Affidavit
	Precontract Revisions
00900	Addenda
DIVISION 1 – GENERAL REQUIREMENTS	
	Summary
01001	General Administrative Requirements
01110	Summary of the Work
	Price and Payment Procedures
01220	Measurement and Payment
	Temporary Facilities and Controls
01510	Common Use Field Office
01571	Temporary Sediment and Erosion Control
DIVISIONS 2 – 16: SPECIFICATIONS	
	DIVISION 2 – SITE CONSTRUCTION
	Local Standards
02000	Town of Chander Water Main Design and Construction Standards
	Site Preparation
02220	Site Demolition
02222	Steel Tank Demolition
02230	Site Clearing
02240	Dewatering
02260	Excavation Support and Protection
	Earthwork
02300	Earthwork
	Storm Sewer Systems
02630	Gravity Storm Sewers
	Bases, Pavements, Drives, and Walkways
02700	Bases and Pavements
	Site Improvements and Amenities
02821	Chain Link Fences and Gates
	Planting
02920	Lawns and Grasses
	DIVISION 3 – CONCRETE
03300	Cast-In-Place Concrete
	DIVISION 9 – FINISHES
09960	Tank Paint System
	DIVISION 11 – EQUIPMENT
11220	Submersible Mixers
	DIVISION 13 – SPECIAL CONSTRUCTION
13130	Factory-Built Control Valve Station
13210	Elevated Steel Water Tanks
	DIVISION 15 – MECHANICAL
15010	General Mechanical Requirements
15040	Common Work Results for Mechanical
15075	Hangers and Supports for Mechanical Piping and Equipment
15900	Instrumentation and Controls for HVAC
15950	Testing, Adjusting, and Balancing for HVAC
	DIVISION 16 – ELECTRICAL AND INSTRUMENTATION & CONTROLS

Table of Contents

Section	Title
16010	Basic Electrical Requirements
16047	Electrical Identification and Signage
16110	Raceways, Conduit, and Boxes for Electrical Systems
16120	Wires and Connectors
16124	Instrumentation Cables
16143	Wiring Devices
16450	Grounding Systems
16470	Panelboards
16485	Disconnect Switches
16500	Interior Lighting
16512	Exterior Lighting
16671	Heat Trace
16700	General I&C Requirements
16710	Control Panels
16720	Field Instrumentation
16730	Process Controls Systems - SCADA

00100

Advertisement for Bids

ADVERTISEMENT FOR BIDS

CHANDLER UTILITIES
TOWN OF CHANDLER, INDIANA
CHANDLER 1.5 MILLION GALLON WATER TOWER

General Notice

Chandler Utilities (Owner) is requesting Bids for the construction of the following Project:

Chandler 1.5 Million Gallon Water Tower

Bids for the construction of the Project will be received at the **Chandler Utilities Maintenance Facility** located at **101 Constitution Ct., Chandler, IN 47610**, until **Monday, December 15th, 2025**, at **4:00 PM** local time. Bids received will be **publicly** opened and read at the **Chandler Town Council Meeting**, held at **6:00 PM** local time on **Monday, December 15th, 2025**, at the **Chandler Town Hall** located at **401 E. Lincoln Ave., Chandler, IN 47610**. Bids delivered in person by 6:00 PM at the meeting will also be received.

The Project includes the following Work:

> **This project includes the construction of a new 1.5 million gallon composite elevated water tower at a site located near the intersection of Fuquay Road and State Route 261. This project also includes the water main, valves and other appurtenances, controls, tank control valve, electrical connections, water fill station, drainage, pavement, and site fencing as specified. Supplemental to this New Paradise tower, a tank control valve will need to be installed offsite to control flows for the existing Plank tower. Lastly, this project will include the demolition and removal of the existing Paradise water tower adjacent to the new tower site as well as the demolition and removal of the offsite Frame standpipe. The demolition will include the disconnection of any and all utility services as necessary.**

Bids are requested for a single prime Contract.

Obtaining the Bidding Documents

Information and Bidding Documents for the Project can be found at the following designated website:

www.blnplanroom.com

Bidding Documents may be downloaded from the designated website. The designated website will be updated periodically with addenda, lists of registered plan holders, reports, and other information relevant to submitting a Bid for the Project. All official notifications, addenda, and other Bidding Documents will be offered only through the designated website. Neither Owner nor Engineer will be responsible for Bidding Documents, including addenda, if any, obtained from sources other than the designated website. **Following registration, complete sets of Bidding Documents may be downloaded from the Issuing Office's website as "zipped" portable document format (PDF) files. The cost of printed Bidding Documents from the Issuing Office will depend on the number and size of the Drawings and Project Manual, applicable taxes, and shipping method selected by the prospective Bidder. Cost of Bidding Documents and shipping is non-refundable. Upon Issuing Office's receipt of payment, printed Bidding Documents will be sent via the prospective Bidder's delivery method of choice; the shipping**

Copyright© 2018 National Society of Professional Engineers, American Council of Engineering Companies, and American Society of Civil Engineers. All rights reserved.

charge will depend on the shipping method chosen. The date that the Bidding Documents are transmitted by the Issuing Office will be considered the Bidder's date of receipt of the Bidding Documents. Partial sets of the Bidding Documents will not be available from the Issuing Office.

The Issuing Office for the Bidding Documents is:

Eastern Engineering Supply
9901 Allisonville Road, Fishers, IN 46038

Prospective Bidders may also examine the Bidding Documents at **Eastern Engineering Supply, 9901 Allisonville Road, Fishers, IN 46038**, the Issuing Office, on **Monday through Thursday** between the hours of **8:00 AM and 4:00 PM** and **Fridays** between **8:00 AM and 12:00 PM**; and the office of **Chandler Utilities, 101 Constitution Ct., Chandler, IN 47610** on **Monday through Friday** between the hours of **8:00 AM** and **3:00 PM**. Neither Owner nor Engineer will be responsible for full or partial sets of Bidding Documents, including addenda, if any, obtained from sources other than the designated website.

~~**Pre-bid Conference**~~

~~A pre-bid conference for the Project will be held on **[day, date]** at **[time]** at **[name of venue] [street address of venue] [city, state, zip code].** Attendance at the pre-bid conference is encouraged but not required.~~

Instructions to Bidders

For all further requirements regarding bid submittal, qualifications, procedures, and contract award, refer to the Instructions to Bidders that are included in the Bidding Documents. Bid security, in a sum of not less than five percent (5%) of the total amount of the highest aggregate bid, shall be furnished in accordance with the Instructions to Bidders. **The Owner reserves the right to reject any and all Bids in whole or in part as specified in the solicitation when it is not in the best interest of the governmental body as determined by the purchasing agency in accordance with IC 5-22-18-2. The Owner also reserves the right to waive irregularities in any Bid, and to accept any Bid, which is deemed most favorable to the Owner.**

This Advertisement is issued by:

Owner: **Town of Chandler**
By: **Tyler Kinder**
Title: **Director of Public Services**
Date: **November 11th, 2025**

Copyright© 2018 National Society of Professional Engineers, American Council of Engineering Companies, and American Society of Civil Engineers. All rights reserved.

00200

Instruction to Bidders

INSTRUCTIONS TO BIDDERS FOR CONSTRUCTION CONTRACT

TABLE OF CONTENTS

Page

Article 1— Defined Terms 1
Article 2— Bidding Documents 1
Article 3— Qualifications of Bidders 2
Article 4— Pre-Bid Conference....2
Article 5— Site and Other Areas; Existing Site Conditions; Examination of Site; Owner's Safety Program; Other Work at the Site 2
Article 6— Bidder's Representations and Certifications 5
Article 7— Interpretations and Addenda 5
Article 8— Bid Security....5
Article 9— Contract Times 6
Article 10— Substitute and "Or Equal" Items 6
Article 11— Subcontractors, Suppliers, and Others....7
Article 12— Preparation of Bid 7
Article 13— Basis of Bid....8
Article 14— Submittal of Bid 9
Article 15— Modification and Withdrawal of Bid 9
Article 16— Opening of Bids 9
Article 17— Bids to Remain Subject to Acceptance....9
Article 18— Evaluation of Bids and Award of Contract 9
Article 19— Bonds and Insurance 10
Article 20— Signing of Agreement 10
Article 21— Sales and Use Taxes.... 11
Article 22— Contracts to Be Assigned.... 11

Copyright© 2018 National Society of Professional Engineers, American Council of Engineering Companies, and American Society of Civil Engineers. All rights reserved.

ARTICLE 1—DEFINED TERMS

1.01 Terms used in these Instructions to Bidders have the meanings indicated in the General Conditions and Supplementary Conditions. Additional terms used in these Instructions to Bidders have the meanings indicated below:

A. *Issuing Office*—The office from which the Bidding Documents are to be issued, and which registers plan holders.

ARTICLE 2—BIDDING DOCUMENTS

2.01 Bidder shall obtain a complete set of Bidding Requirements and proposed Contract Documents (together, the Bidding Documents). See the Agreement for a list of the Contract Documents. It is Bidder's responsibility to determine that it is using a complete set of documents in the preparation of a Bid. Bidder assumes sole responsibility for errors or misinterpretations resulting from the use of incomplete documents, by Bidder itself or by its prospective Subcontractors and Suppliers.

2.02 Bidding Documents are made available for the sole purpose of obtaining Bids for completion of the Project and permission to download or distribution of the Bidding Documents does not confer a license or grant permission or authorization for any other use. Authorization to download documents, or other distribution, includes the right for plan holders to print documents solely for their use, and the use of their prospective Subcontractors and Suppliers, provided the plan holder pays all costs associated with printing or reproduction. Printed documents may not be re-sold under any circumstances.

2.03 Owner has established a Bidding Documents Website as indicated in the Advertisement or invitation to bid. Owner recommends that Bidder register as a plan holder with the Issuing Office at such website, and obtain a complete set of the Bidding Documents from such website. Bidders may rely that sets of Bidding Documents obtained from the Bidding Documents Website are complete, unless an omission is blatant. Registered plan holders will receive Addenda issued by Owner.

2.04 *Electronic Documents*

A. When the Bidding Requirements indicate that electronic (digital) copies of the Bidding Documents are available, such documents will be made available to the Bidders as Electronic Documents in the manner specified.

1. Bidding Documents will be provided in Adobe PDF (Portable Document Format) (.pdf) that is readable by Adobe Acrobat Reader DC or later. It is the intent of the Engineer and Owner that such Electronic Documents are to be exactly representative of the paper copies of the documents. However, because the Owner and Engineer cannot totally control the transmission and receipt of Electronic Documents nor the Contractor's means of reproduction of such documents, the Owner and Engineer cannot and do not guarantee that Electronic Documents and reproductions prepared from those versions are identical in every manner to the paper copies.

B. Unless otherwise stated in the Bidding Documents, the Bidder may use and rely upon complete sets of Electronic Documents of the Bidding Documents, described in Paragraph 2.04.A above. However, Bidder assumes all risks associated with differences

Copyright© 2018 National Society of Professional Engineers, American Council of Engineering Companies, and American Society of Civil Engineers. All rights reserved.

arising from transmission/receipt of Electronic Documents versions of Bidding Documents and reproductions prepared from those versions and, further, assumes all risks, costs, and responsibility associated with use of the Electronic Documents versions to derive information that is not explicitly contained in printed paper versions of the documents, and for Bidder's reliance upon such derived information.

ARTICLE 3—QUALIFICATIONS OF BIDDERS

3.01 To demonstrate Bidder's qualifications to perform the Work, Bidder must submit with the Bid a Qualifications Statement containing the following information:

A. Written evidence establishing its qualifications such as financial data, previous experience, and present commitments.

B. A written statement that Bidder is authorized to do business in the state where the Project is located, or a written certification that Bidder will obtain such authority prior to the Effective Date of the Contract.

C. Bidder's state or other contractor license number, if applicable.

D. Subcontractor and Supplier qualification information; **coordinate with provisions of Article 11 of these Instructions, "Subcontractors, Suppliers, and Others."**

E. Other required information regarding qualifications.

3.02 A Bidder's failure to submit required qualification information may disqualify Bidder from receiving an award of the Contract.

3.03 No requirement in this Article 3 to submit information will prejudice the right of Owner to seek additional pertinent information regarding Bidder's qualifications.

~~**ARTICLE 4—PRE-BID CONFERENCE**~~

~~4.01 A mandatory pre-bid conference will be held at the time and location indicated in the Advertisement or invitation to bid. Representatives of Owner and Engineer will be present to discuss the Project. Proposals will not be accepted from Bidders who do not attend the conference. It is each Bidder's responsibility to sign in at the pre-bid conference to verify its participation. Bidders must sign in using the name of the organization that will be submitting a Bid. A list of qualified Bidders that attended the pre-bid conference and are eligible to submit a Bid for this Project will be issued in an Addendum.~~

~~4.02 Information presented at the pre-Bid conference does not alter the Contract Documents. Owner will issue Addenda to make any changes to the Contract Documents that result from discussions at the pre-Bid conference. Information presented, and statements made at the pre-bid conference will not be binding or legally effective unless incorporated in an Addendum.~~

ARTICLE 5—SITE AND OTHER AREAS; EXISTING SITE CONDITIONS; EXAMINATION OF SITE; OWNER'S SAFETY PROGRAM; OTHER WORK AT THE SITE

5.01 *Site and Other Areas*

A. The Site is identified in the Bidding Documents. By definition, the Site includes rights-of-way, easements, and other lands furnished by Owner for the use of the Contractor. Any

Copyright© 2018 National Society of Professional Engineers, American Council of Engineering Companies, and American Society of Civil Engineers. All rights reserved.

additional lands required for temporary construction facilities, construction equipment, or storage of materials and equipment, and any access needed for such additional lands, are to be obtained and paid for by Contractor.

5.02 *Existing Site Conditions*

A. *Subsurface and Physical Conditions; Hazardous Environmental Conditions*

1. The Supplementary Conditions identify the following regarding existing conditions at or adjacent to the Site:

   a. Those reports of explorations and tests of subsurface conditions at or adjacent to the Site that contain Technical Data.

   b. Those drawings known to Owner of existing physical conditions at or adjacent to the Site, including those drawings depicting existing surface or subsurface structures at or adjacent to the Site (except Underground Facilities), that contain Technical Data.

   c. Reports and drawings known to Owner relating to Hazardous Environmental Conditions that have been identified at or adjacent to the Site.

   d. Technical Data contained in such reports and drawings.

2. Owner will make copies of reports and drawings referenced above available to any Bidder on request. These reports and drawings are not part of the Contract Documents, but the Technical Data contained therein upon whose accuracy Bidder is entitled to rely, as provided in the General Conditions, has been identified and established in the Supplementary Conditions. Bidder is responsible for any interpretation or conclusion Bidder draws from any Technical Data or any other data, interpretations, opinions, or information contained in such reports or shown or indicated in such drawings.

3. If the Supplementary Conditions do not identify Technical Data, the default definition of Technical Data set forth in Article 1 of the General Conditions will apply.

4. *Geotechnical Baseline Report/Geotechnical Data Report:* The Bidding Documents contain a Geotechnical Baseline Report (GBR) and Geotechnical Data Report (GDR).

   a. As set forth in the Supplementary Conditions, the GBR describes certain select subsurface conditions that are anticipated to be encountered by Contractor during construction in specified locations ("Baseline Conditions"). The GBR is a Contract Document.

   b. The Baseline Conditions in the GBR are intended to reduce uncertainty and the degree of contingency in submitted Bids. However, Bidders cannot rely solely on the Baseline Conditions. Bids should be based on a comprehensive approach that includes an independent review and analysis of the GBR, all other Contract Documents, Technical Data, other available information, and observable surface conditions. Not all potential subsurface conditions are baselined.

   c. Nothing in the GBR is intended to relieve Bidders of the responsibility to make their own determinations regarding construction costs, bidding strategies, and Bid prices, nor of the responsibility to select and be responsible for the means,

Copyright© 2018 National Society of Professional Engineers, American Council of Engineering Companies, and American Society of Civil Engineers. All rights reserved.

methods, techniques, sequences, and procedures of construction, and for safety precautions and programs incident thereto.

d. As set forth in the Supplementary Conditions, the GDR is a Contract Document containing data prepared by or for the Owner in support of the GBR.

B. *Underground Facilities:* Underground Facilities are shown or indicated on the Drawings, pursuant to Paragraph 5.05 of the General Conditions, and not in the drawings referred to in Paragraph 5.02.A of these Instructions to Bidders. Information and data regarding the presence or location of Underground Facilities are not intended to be categorized, identified, or defined as Technical Data.

5.03 *Other Site-related Documents*

A. No other Site-related documents are available.

5.04 *Site Visit and Testing by Bidders*

A. Bidder is required to visit the Site and conduct a thorough visual examination of the Site and adjacent areas. During the visit the Bidder must not disturb any ongoing operations at the Site.

B. Bidders visiting the Site are required to arrange their own transportation to the Site.

C. On request, and to the extent Owner has control over the Site, and schedule permitting, the Owner will provide Bidder general access to the Site to conduct such additional examinations, investigations, explorations, tests, and studies as Bidder deems necessary for preparing and submitting a successful Bid. Owner will not have any obligation to grant such access if doing so is not practical because of existing operations, security or safety concerns, or restraints on Owner's authority regarding the Site. Bidder is responsible for establishing access needed to reach specific selected test sites.

D. Bidder must comply with all applicable Laws and Regulations regarding excavation and location of utilities, obtain all permits, and comply with all terms and conditions established by Owner or by property owners or other entities controlling the Site with respect to schedule, access, existing operations, security, liability insurance, and applicable safety programs.

E. Bidder must fill all holes and clean up and restore the Site to its former condition upon completion of such explorations, investigations, tests, and studies.

F. **Bidder shall agree at the time submitting its Bid that no further examinations, investigations, explorations, tests, studies, or data are necessary for the determination of its Bid for performance of the work at the price(s) bid and within the times and in accordance with other terms and conditions of the Bidding Documents.**

5.05 *Owner's Safety Program*

A. Site visits and work at the Site may be governed by an Owner safety program. If an Owner safety program exists, it will be noted in the Supplementary Conditions.

5.06 *Other Work at the Site*

A. Reference is made to Article 8 of the Supplementary Conditions for the identification of the general nature of other work of which Owner is aware (if any) that is to be performed at the Site by Owner or others (such as utilities and other prime contractors) and relates to

Copyright© 2018 National Society of Professional Engineers, American Council of Engineering Companies, and American Society of Civil Engineers. All rights reserved.

the Work contemplated by these Bidding Documents. If Owner is party to a written contract for such other work, then on request, Owner will provide to each Bidder access to examine such contracts (other than portions thereof related to price and other confidential matters), if any.

ARTICLE 6—BIDDER'S REPRESENTATIONS AND CERTIFICATIONS

6.01 *Express Representations and Certifications in Bid Form, Agreement*

A. The Bid Form that each Bidder will submit contains express representations regarding the Bidder's examination of Project documentation, Site visit, and preparation of the Bid, and certifications regarding lack of collusion or fraud in connection with the Bid. Bidder should review these representations and certifications, and assure that Bidder can make the representations and certifications in good faith, before executing and submitting its Bid.

B. If Bidder is awarded the Contract, Bidder (as Contractor) will make similar express representations and certifications when it executes the Agreement.

ARTICLE 7—INTERPRETATIONS AND ADDENDA

7.01 Owner on its own initiative may issue Addenda to clarify, correct, supplement, or change the Bidding Documents.

7.02 Bidder shall submit all questions about the meaning or intent of the Bidding Documents to Engineer in writing. Contact information and submittal procedures for such questions are as follows:

A. **All questions for clarification shall be directed to Brian Bullock at brian.bullock@egis-group.com, Carl Frey at carl.frey@egis-group.com or at the following address:**

Egis BLN USA, Inc.
Attn: Carl Frey
8320 Craig Street
Indianapolis, IN 46250

7.03 Interpretations or clarifications considered necessary by Engineer in response to such questions will be issued by Addenda delivered to all registered plan holders. Questions received less than seven days prior to the date for opening of Bids may not be answered.

7.04 Only responses set forth in an Addendum will be binding. Oral and other interpretations or clarifications will be without legal effect. Responses to questions are not part of the Contract Documents unless set forth in an Addendum that expressly modifies or supplements the Contract Documents.

ARTICLE 8—BID SECURITY

8.01 A Bid must be accompanied by Bid security **in accordance with State Statute** made payable to Owner in an amount of **[five (5)]** percent of Bidder's maximum Bid price (determined by adding the base bid and all alternates) and in the form of a Bid bond issued by a surety meeting the requirements of Paragraph 6.01 of the General Conditions **or certified check**. Such Bid bond will be issued in the form included in the Bidding Documents.

Copyright© 2018 National Society of Professional Engineers, American Council of Engineering Companies, and American Society of Civil Engineers. All rights reserved.

8.02 The Bid security of the apparent Successful Bidder will be retained until Owner awards the contract to such Bidder, and such Bidder has executed the Contract, furnished the required Contract security, and met the other conditions of the Notice of Award, whereupon the Bid security will be released. If the Successful Bidder fails to execute and deliver the Contract and furnish the required Contract security within 15 days after the Notice of Award, Owner may consider Bidder to be in default, annul the Notice of Award, and the Bid security of that Bidder will be forfeited, in whole in the case of a penal sum bid bond, and to the extent of Owner's damages in the case of a damages-form bond. Such forfeiture will be Owner's exclusive remedy if Bidder defaults.

8.03 The Bid security of other Bidders that Owner believes to have a reasonable chance of receiving the award may be retained by Owner until the earlier of 7 days after the Effective Date of the Contract or 61 days after the Bid opening, whereupon Bid security furnished by such Bidders will be released.

8.04 Bid security of other Bidders that Owner believes do not have a reasonable chance of receiving the award will be released within 7 days after the Bid opening.

ARTICLE 9—CONTRACT TIMES

9.01 The number of days within which, or the dates by which, the Work is to be (a) substantially completed and (b) ready for final payment, and (c) Milestones (if any) are to be achieved, are set forth in the Agreement.

9.02 Provisions for liquidated damages, if any, for failure to timely attain a Milestone, Substantial Completion, or completion of the Work in readiness for final payment, are set forth in the Agreement.

ARTICLE 10—SUBSTITUTE AND "OR EQUAL" ITEMS

10.01 The Contract for the Work, as awarded, will be on the basis of materials and equipment specified or described in the Bidding Documents, and those "or-equal" or substitute or materials and equipment subsequently approved by Engineer prior to the submittal of Bids and identified by Addendum. No item of material or equipment will be considered by Engineer as an "or-equal" or substitute unless written request for approval has been submitted by Bidder and has been received by Engineer within 10 days of the issuance of the Advertisement for Bids or invitation to Bidders. Each such request must comply with the requirements of Paragraphs 7.05 and 7.06 of the General Conditions, and the review of the request will be governed by the principles in those paragraphs. The burden of proof of the merit of the proposed item is upon Bidder. Engineer's decision of approval or disapproval of a proposed item will be final. If Engineer approves any such proposed item, such approval will be set forth in an Addendum issued to all registered Bidders. Bidders cannot rely upon approvals made in any other manner.

10.02 All prices that Bidder sets forth in its Bid will be based on the presumption that the Contractor will furnish the materials and equipment specified or described in the Bidding Documents, as supplemented by Addenda. Any assumptions regarding the possibility of post-Bid approvals of "or-equal" or substitution requests are made at Bidder's sole risk.

Copyright© 2018 National Society of Professional Engineers, American Council of Engineering Companies, and American Society of Civil Engineers. All rights reserved.

ARTICLE 11—SUBCONTRACTORS, SUPPLIERS, AND OTHER

11.01 The apparent Successful Bidder, and any other Bidder so requested, must submit to Owner a list of the Subcontractors or Suppliers proposed for the Work within five days after Bid opening.

11.02 If requested by Owner, such list must be accompanied by an experience statement with pertinent information regarding similar projects and other evidence of qualification for each such Subcontractor or Supplier. If Owner or Engineer, after due investigation, has reasonable objection to any proposed Subcontractor or Supplier, Owner may, before the Notice of Award is given, request apparent Successful Bidder to submit an acceptable substitute, in which case apparent Successful Bidder will submit a substitute, Bidder's Bid price will be increased (or decreased) by the difference in cost occasioned by such substitution, and Owner may consider such price adjustment in evaluating Bids and making the Contract award.

11.03 If apparent Successful Bidder declines to make any such substitution, Owner may award the Contract to the next lowest Bidder that proposes to use acceptable Subcontractors and Suppliers. Declining to make requested substitutions will constitute grounds for forfeiture of the Bid security of any Bidder. Any Subcontractor or Supplier, so listed and against which Owner or Engineer makes no written objection prior to the giving of the Notice of Award will be deemed acceptable to Owner and Engineer subject to subsequent revocation of such acceptance as provided in Paragraph 7.07 of the General Conditions.

ARTICLE 12—PREPARATION OF BID

12.01 The Bid Form is included with the Bidding Documents.

A. All blanks on the Bid Form must be completed in ink and the Bid Form signed in ink. Erasures or alterations must be initialed in ink by the person signing the Bid Form. A Bid price must be indicated for each section, Bid item, alternate, adjustment unit price item, and unit price item listed therein.

B. If the Bid Form expressly indicates that submitting pricing on a specific alternate item is optional, and Bidder elects to not furnish pricing for such optional alternate item, then Bidder may enter the words "No Bid" or "Not Applicable."

12.02 If Bidder has obtained the Bidding Documents as Electronic Documents, then Bidder shall prepare its Bid on a paper copy of the Bid Form printed from the Electronic Documents version of the Bidding Documents. The printed copy of the Bid Form must be clearly legible, printed on 8½ inch by 11-inch paper and as closely identical in appearance to the Electronic Document version of the Bid Form as may be practical. The Owner reserves the right to accept Bid Forms which nominally vary in appearance from the original paper version of the Bid Form, providing that all required information and submittals are included with the Bid.

12.03 A Bid by a corporation must be executed in the corporate name by a corporate officer (whose title must appear under the signature), accompanied by evidence of authority to sign. The corporate address and state of incorporation must be shown.

12.04 A Bid by a partnership must be executed in the partnership name and signed by a partner (whose title must appear under the signature), accompanied by evidence of authority to sign. The official address of the partnership must be shown.

Copyright© 2018 National Society of Professional Engineers, American Council of Engineering Companies, and American Society of Civil Engineers. All rights reserved.

12.05 A Bid by a limited liability company must be executed in the name of the firm by a member or other authorized person and accompanied by evidence of authority to sign. The state of formation of the firm and the official address of the firm must be shown.

12.06 A Bid by an individual must show the Bidder's name and official address.

12.07 A Bid by a joint venture must be executed by an authorized representative of each joint venturer in the manner indicated on the Bid Form. The joint venture must have been formally established prior to submittal of a Bid, and the official address of the joint venture must be shown.

12.08 All names must be printed in ink below the signatures.

12.09 The Bid must contain an acknowledgment of receipt of all Addenda, the numbers of which must be filled in on the Bid Form.

12.10 Postal and e-mail addresses and telephone number for communications regarding the Bid must be shown.

12.11 The Bid must contain evidence of Bidder's authority to do business in the state where the Project is located, or Bidder must certify in writing that it will obtain such authority within the time for acceptance of Bids and attach such certification to the Bid.

12.12 If Bidder is required to be licensed to submit a Bid or perform the Work in the state where the Project is located, the Bid must contain evidence of Bidder's licensure, or Bidder must certify in writing that it will obtain such licensure within the time for acceptance of Bids and attach such certification to the Bid. Bidder's state contractor license number, if any, must also be shown on the Bid Form.

ARTICLE 13—BASIS OF BID

13.01 *Unit Price*

A. Bidders must submit a Bid on a unit price basis for each item of Work listed in the unit price section of the Bid Form.

B. The "Bid Price" (sometimes referred to as the extended price) for each unit price Bid item will be the product of the "Estimated Quantity", which Owner or its representative has set forth in the Bid Form, for the item and the corresponding "Bid Unit Price" offered by the Bidder. The total of all unit price Bid items will be the sum of these "Bid Prices"; such total will be used by Owner for Bid comparison purposes. The final quantities and Contract Price will be determined in accordance with Paragraph 13.03 of the General Conditions.

C. Discrepancies between the multiplication of units of Work and unit prices will be resolved in favor of the unit prices. Discrepancies between the indicated sum of any column of figures and the correct sum thereof will be resolved in favor of the correct sum.

13.02 *Allowances*

A. For cash allowances the Bid price must include such amounts as the Bidder deems proper for Contractor's overhead, costs, profit, and other expenses on account of cash allowances, if any, named in the Contract Documents, in accordance with Paragraph 13.02.B of the General Conditions.

Copyright© 2018 National Society of Professional Engineers, American Council of Engineering Companies, and American Society of Civil Engineers. All rights reserved.

ARTICLE 14—SUBMITTAL OF BID

14.01 A Bid must be received no later than the date and time prescribed and at the place indicated in the Advertisement or invitation to bid and must be enclosed in a plainly marked package with the Project title, and, if applicable, the designated portion of the Project for which the Bid is submitted, the name and address of Bidder, and must be accompanied by the Bid security and other required documents. If a Bid is sent by mail or other delivery system, the sealed envelope containing the Bid must be enclosed in a separate package plainly marked on the outside with the notation "BID ENCLOSED." A mailed Bid must be addressed to the location designated in the Advertisement.

14.02 Bids received after the date and time prescribed for the opening of bids, or not submitted at the correct location or in the designated manner, will not be accepted and will be returned to the Bidder unopened.

ARTICLE 15—MODIFICATION AND WITHDRAWAL OF BID

15.01 An unopened Bid may be withdrawn by an appropriate document duly executed in the same manner that a Bid must be executed and delivered to the place where Bids are to be submitted prior to the date and time for the opening of Bids. Upon receipt of such notice, the unopened Bid will be returned to the Bidder.

15.02 If a Bidder wishes to modify its Bid prior to Bid opening, Bidder must withdraw its initial Bid in the manner specified in Paragraph 15.01 and submit a new Bid prior to the date and time for the opening of Bids.

15.03 If within 24 hours after Bids are opened any Bidder files a duly signed written notice with Owner and promptly thereafter demonstrates to the reasonable satisfaction of Owner that there was a material and substantial mistake in the preparation of its Bid, the Bidder may withdraw its Bid, and the Bid security will be returned. Thereafter, if the Work is rebid, the Bidder will be disqualified from further bidding on the Work.

ARTICLE 16—OPENING OF BIDS

16.01 Bids will be opened at the time and place indicated in the advertisement or invitation to bid and, unless obviously non-responsive, read aloud publicly. An abstract of the amounts of the base Bids and major alternates, if any, will be made available to Bidders after the opening of Bids.

ARTICLE 17—BIDS TO REMAIN SUBJECT TO ACCEPTANCE

17.01 All Bids will remain subject to acceptance for the period of time stated in the Bid Form, but Owner may, in its sole discretion, release any Bid and return the Bid security prior to the end of this period.

ARTICLE 18—EVALUATION OF BIDS AND AWARD OF CONTRACT

18.01 Owner reserves the right to reject any or all Bids, including without limitation, nonconforming, nonresponsive, unbalanced, or conditional Bids. Owner also reserves the right to waive all minor Bid informalities not involving price, time, or changes in the Work.

18.02 Owner will reject the Bid of any Bidder that Owner finds, after reasonable inquiry and

Copyright© 2018 National Society of Professional Engineers, American Council of Engineering Companies, and American Society of Civil Engineers. All rights reserved.

evaluation, to not be responsible.

18.03 If Bidder purports to add terms or conditions to its Bid, takes exception to any provision of the Bidding Documents, or attempts to alter the contents of the Contract Documents for purposes of the Bid, whether in the Bid itself or in a separate communication to Owner or Engineer, then Owner will reject the Bid as nonresponsive.

18.04 If Owner awards the contract for the Work, such award will be to the responsible Bidder submitting the lowest responsive Bid.

18.05 *Evaluation of Bids*

A. In evaluating Bids, Owner will consider whether the Bids comply with the prescribed requirements, and such alternates, unit prices, and other data, as may be requested in the Bid Form or prior to the Notice of Award.

B. In the comparison of Bids, the award may be made to Successful Bidder on its base Bid and any combination of its additive alternate Bids for which Owner determines funds will be available at the time of award.

C. For the determination of the apparent low Bidder when unit price bids are submitted, Bids will be compared on the basis of the total of the products of the estimated quantity of each item and unit price Bid for that item, together with any lump sum items.

18.06 In evaluating whether a Bidder is responsible, Owner will consider the qualifications of the Bidder and may consider the qualifications and experience of Subcontractors and Suppliers proposed for those portions of the Work for which the identity of Subcontractors and Suppliers must be submitted as provided in the Bidding Documents.

18.07 Owner may conduct such investigations as Owner deems necessary to establish the responsibility, qualifications, and financial ability of Bidders and any proposed Subcontractors or Suppliers.

ARTICLE 19—BONDS AND INSURANCE

19.01 Article 6 of the General Conditions, as may be modified by the Supplementary Conditions, sets forth Owner's requirements as to performance and payment bonds, other required bonds (if any), and insurance. When the Successful Bidder delivers the executed Agreement to Owner, it must be accompanied by required bonds and insurance documentation.

19.02 Article 8, Bid Security, of these Instructions, addresses any requirements for providing bid bonds as part of the bidding process.

ARTICLE 20—SIGNING OF AGREEMENT

20.01 When Owner issues a Notice of Award to the Successful Bidder, it will be accompanied by the unexecuted counterparts of the Agreement along with the other Contract Documents as identified in the Agreement. Within 15 days thereafter, Successful Bidder must execute and deliver the required number of counterparts of the Agreement and any bonds and insurance documentation required to be delivered by the Contract Documents to Owner. Within 10 days thereafter, Owner will deliver one fully executed counterpart of the Agreement to Successful Bidder, together with printed and electronic copies of the Contract Documents as stated in Paragraph 2.02 of the General Conditions.

Copyright© 2018 National Society of Professional Engineers, American Council of Engineering Companies, and American Society of Civil Engineers. All rights reserved.

ARTICLE 21—SALES AND USE TAXES

21.01 Owner is exempt from Indiana state sales and use taxes on materials and equipment to be incorporated in the Work. Said taxes must not be included in the Bid. Refer to Paragraph SC-7.10 of the Supplementary Conditions for additional information.

ARTICLE 22—CONTRACTS TO BE ASSIGNED

22.01 **There are no Contracts to be assigned.**

Copyright© 2018 National Society of Professional Engineers, American Council of Engineering Companies, and American Society of Civil Engineers. All rights reserved.

00310

Geotechnical Data

CTL Engineering, Inc.
1310 S. Franklin Road
Indianapolis, Indiana 46239
Phone: (317) 295-8650 • Fax: (317) 295-8395
www.ctleng.com

Consulting *Engineers – Testing – Inspection Services – Analytical*

January 29, 2025

Beam, Longest and Neff
8320 Craig Street
Indianapolis, IN 46250

Attention: Mr. Chris Kaufman, PE, MLE
Vice President, Water Resources

Reference: Geotechnical Exploration
1.5 Million Gallon Water Tank
SR 261
Chandler, Indiana
CTL Project No.: 24050125IND

Dear Mr. Kaufman:

In accordance with your authorization to proceed, CTL Engineering, Inc. has completed the geotechnical investigation on the above referenced site. The report includes the results of the field and laboratory testing, and foundation recommendations and soil parameters required for the design of the proposed water tank.

Thank you for the opportunity to be of service to you on this project. If you have any questions or need further information, please contact us at (317) 295-8650.

Sincerely,

CTL ENGINEERING, INC.

Anthony L. Mason, PE
Geotechnical Service Line Manager

cc: Lauren McCleary, PE, Beam, Longest and Neff

GEOTECHNICAL INVESTIGATION

1.5 MILLION GALLON WATER TANK
SR 261
CHANDLER, INDIANA
CTL PROJECT NO.: 24050125IND

PREPARED FOR:

BEAM, LONGEST AND NEFF
8320 CRAIG STREET
INDIANAPOLIS, IN 46250

PREPARED BY:

CTL ENGINEERING, INC.
1310 S. FRANKLIN ROAD
INDIANAPOLIS, INDIANA 46239

JANUARY 29, 2025

TABLE OF CONTENTS

Page

I. PROJECT LOCATION AND DESCRIPTION 1
II. SUBSURFACE INVESTIGATION 1
III. FINDINGS 2
A. Subsurface Conditions 2
B. Groundwater 3
C. Seismic Coefficients 4
IV. DISCUSSION AND RECOMMENDATIONS 4
A. Elevated Water Tank 4
B. General Site Preparation and Earthwork 6
C. Groundwater Control 7
V. CONCLUDING REMARKS 8

LIST OF TABLES

Table 1 - Bedrock Location and Depth 3
Table 2 - Groundwater Depths 3
Table 3 - Allowable Bearing Capacity and Estimated Settlements 5

LIST OF APPENDICES

APPENDIX A GENERAL LOCATION PLAN
BORING LOCATION PLAN

APPENDIX B TEST BORING RECORDS

APPENDIX C LABORATORY TESTING

APPENDIX D SOIL PROFILE

APPENDIX E SEISMIC COEFFICIENTS

I. PROJECT LOCATION AND DESCRIPTION

The project involves the design and construction of a new elevated water tank to be located north of intersection of Fuquay Road and SR 261 in Chandler, Indiana. The proposed water tank will be constructed southeast of the existing water tank. Historical aerial imagery of the site indicates that the northeastern portion of the proposed tank project footprint was previously occupied by two buildings which have since been demolished. CTL understands that the debris was removed after the demolition. The tank is proposed to have a capacity of 1.5 million gallons with a pedestal diameter of 42 feet. The tank is anticipated to be supported on a shallow foundation system consisting of either a mat foundation or a ring type spread footing. CTL understands the settlement criteria of the tank is up to 2-½ inches. Detailed structural plans were not available at the time of preparation of this report. CTL should be provided the opportunity to review the recommendations within this report as more detailed information becomes available.

II. SUBSURFACE INVESTIGATION

Four test borings designated as B-1, B-2, B-3 and B-4 were drilled to depths ranging from approximately 24.2 to 50 feet below the existing ground surface for this project. The test borings were performed in the vicinity of the proposed water tank footprint as directed by the client. The test borings are shown on the attached Boring Location Plans in Appendix A, Test Boring Records in Appendix B and Soil Profile in Appendix D.

The test borings were advanced with an ATV mounted drilling rig utilizing hollow stem augers (HSA) between November 25, 2024 and November 27, 2024 and. Standard Penetration tests were conducted using a 140-pound automatic hammer falling 30 inches to drive a 2-inch O.D. split barrel sampler for 18 inches.

Soil and rock samples obtained from the drilling operation were preserved, with soil samples stored in glass jars and rock samples in core boxes. Recovered samples were visually classified in the field by the drilling crew. In the laboratory, soil samples were classified by a geotechnical engineer while the rock cores were classified by a geologist. Recovered soil samples were tested for natural moisture content, and representative samples were tested for Atterberg Limits, grain size distribution, unconfined compressive strength testing, one-dimensional consolidation testing, and pH. Additionally, representative rock samples were tested for compressive strength.

Drilling, soil sampling and laboratory testing were performed following standard geotechnical engineering practices and current ASTM procedures. Results from field tests are shown on the enclosed Test Boring Records in Appendix B and laboratory test results in Appendix C.

Latitude and longitude coordinates of the test borings were estimated from Google Earth and then located using a Trimble Geo7X GPS system. Surface elevations of the test borings were estimated from Warrick County GIS. Boring locations and surface elevations shown in the appendices of this report should be considered approximate.

III. FINDINGS

A. Subsurface Conditions

Test boring B-1 encountered approximately 6 inches of crushed stone at the surface. Beneath the crushed stone, cohesive soils were encountered consisting of medium stiff to stiff lean clay (CL) extending to a depth of 22 feet. The cohesive soils were underlain by a granular soil layer consisting of dense to very dense silty sand (SM) with sandstone fragments extending to a depth of 34.5 feet. A 6-inch peat layer was encountered between depths of 34.5 and 35.0 feet, underlain by highly weathered shale to the auger refusal depth of 40.0 feet. Weathered limestone bedrock was observed between 42.0 and 42.9 feet, followed by highly weathered shale extending to a depth of 46.7 feet. Slightly weathered limestone was encountered to a depth of 49.5 feet, underlain by slightly weathered shale extending to the boring termination depth of 50.0 feet.

Test borings B-2 and B-3 encountered approximately 6 inches of crushed stone with sand, while B-4 encountered 10 inches of surficial soil (topsoil). Beneath the surficial layers, fill soils consisting of lean clay with brick fragments were encountered in Test Boring B-2 to a depth of 6 feet. Beneath the fill soils in B-2 and the surficial soils in B-3 and B-4, the borings encountered cohesive soils consisting of medium stiff to very stiff lean clay (CL) extending to depths of 19 to 22 feet. The cohesive soils were underlain by granular soil layer consisting of dense to very dense silty sand (SM) with sandstone fragments extending to auger refusal depths ranging from 24.5 to 25.0 feet. Auger refusal at these depths may have occurred due to the presence of boulders or other unknown obstructions.

Standard penetration blowcount values (N-values) in the upper cohesive soils ranged from 5 to 16 blows per foot (bpf), while the underlying granular silty sand soils ranged from 33 to greater than 50 bpf. The weathered shale encountered in B-1 exhibited blow counts exceeding 50 bpf.

The cohesive soils exhibited Liquid Limit (LL) of 35 percent and Plasticity Index (PI) of 19 percent. The pH values of the soils ranged from 6.8 to 7.5 and the natural moisture content values ranged from 19 to 26 percent.

Below the soil overburden, the test borings encountered bedrock consisting of limestone and shale as shown on the attached Test Boring Records in Appendix B and summarized below in Table 1. Rock coring was performed in the test boring B-1. The recovered bedrock exhibited rock recovery values ranging from 65 to 92 percent and Rock Quality Designation (RQD) values ranging from 46 to 53 percent. Detailed information of rock type, recovery and RQD values are shown in the Test Boring Records in Appendix B. Photographs of the rock cores are also included in Appendix B.

Table 1 - Bedrock Location and Depth

Boring No.	Surface Elevation	Auger Refusal Depth (feet)	Bedrock Elevation (feet)
B-1	469	40.0	429*

* Highly weathered shale was encountered at a depth of 35 feet. (El. 434)

B. Groundwater

Groundwater level and soil cave-in depths were recorded during and following the drilling operation as shown on the enclosed Test Boring Records in Appendix B and as summarized below in Table 2. It should be noted that groundwater levels recorded during this subsurface exploration may not be a reliable indication of long-term groundwater levels. Fluctuations in the groundwater level can occur with seasonal and weather conditions.

Table 2 - Groundwater Depths

Boring No.	Boring Elevation	Groundwater Depth (feet)			Cave-in Depth (feet)
		During Drilling	At Completion	Delayed Reading	
B-1	469	Dry	5.7	14.0 @ 5 Hrs	30.3
B-2	468	Dry	Dry	13.5 @ 24 Hrs	14.0
B-3	469	Dry	Dry	14.3 @ 1 Hr	15.2
B-4	468	Dry	Dry	Dry @ 1 Hr	15.0

C. Seismic Coefficients

The subsurface conditions at this site meet the requirements for Site Class D based on the 2012 IBC and Table 20.3-1 of 2010 ASCE 7 Chapter 20. Given a Site Class C, and the geographic location of the project site, the design parameters listed below may be used. Additional seismic coefficients, if needed, can found in Appendix E of this report.

Site Class D

$PGA_M = 0.309g$ $S_S = 0.512g$ $S_{DS} = 0.408g$ $S_1 = 0.185g$ $S_{D1} = 0.199g$

In accordance with INDOT Geotechnical Design Memorandum No. 2010-02, liquefaction assessment was performed on the overburden soils because the site is determined to be in Seismic Zone 2. Additional seismic coefficients are provided in Appendix E.

The soils were determined to be susceptible to liquefaction in accordance with Bray and Sancio (2006) and Boulanger & Idriss (2004). Liquefaction analysis indicates the underlying overburden soils may experience negligible liquefaction induced settlement during a significant seismic event. The owner should be aware of the risk of detrimental settlement to the structures during a seismic event may still exist.

IV. DISCUSSION AND RECOMMENDATIONS

Based upon the project details as well as the subsurface information obtained from the field and laboratory testing, the following recommendations are provided.

A. Elevated Water Tank

The proposed water tank is anticipated to be supported on shallow foundations bearing between 8 and 12 feet below grade with an anticipated settlement tolerance of 2-½ inches. The soils encountered at those depths generally consisted of medium stiff to stiff lean clay. Plans were not available at the time of the report. It is assumed that the proposed grade in the vicinity of the proposed water tank will be at or near existing grade; and therefore, no settlement due to grade raise fill is anticipated.

The foundation support recommendations provided in the following paragraphs pertain to a ring or mat foundation system. It should be noted that the tank could

also be supported on deep foundation systems, if necessary. Recommendations for deep foundations can be provided upon request.

1. A ring foundation system may be proportioned using the allowable bearing capacity value shown below in Table 3. These values apply to the total of all design loads excluding weight of backfill. Settlement of the ring foundation may vary across the tank due to variations in soil composition, void ratio, depth of groundwater, width of footings and loading. The estimated total and differential settlements are tabulated shown in Table 3. If additional capacity is needed for the tank, deep foundations bearing on rock or ground improvements such as Rammed Aggregate Piers (RAPs) or Vibratory Stone Columns (VSC's) should be considered.

Table 3 - Allowable Bearing Capacity and Estimated Settlements

Bottom of Footings	Allowable Bearing Capacity(1) (psf)	Estimated Total Settlement (inches)	Estimated Differential Settlement (inches)
At or Below 10' (Below El 458±)	4,250(2)	1 ½	¾

(1) The allowable bearing capacity may be increased by 30 percent for transient loading conditions (e.g., seismic, wind).
(2) Bearing capacity limited by strength limit state due to the medium stiff clay soils encountered.

2. Excavations within the soil overburden at this site may be accomplished using conventional excavation equipment. Soft soils encountered at or below the bottom of footings should be removed. Such soils may be encountered depending upon time of construction and fluctuation in groundwater level. If undercutting of unsuitable soils is necessary, the base of the footing excavation should be extended at a rate of 2 (horizontal) to 1 (vertical) from the outside edge of the footing. All foundation bearing surfaces should be observed and approved by the Soils Engineer.

3. Based on the recorded groundwater levels at the time of drilling, the groundwater was noted at depths ranging from approximately 6 to 14 feet. Groundwater and/or seepage water may be encountered in excavations extending below a depth of 13± feet. Perched water could be encountered at shallower depths. Localized sump pumps or wells within the excavations may be used to control groundwater within excavations. Pumps should be appropriately sized to limit fine soil migration during pumping. It should be noted that groundwater levels at the time of construction could be different than indicated in this report depending upon time of construction and amount of seasonal precipitation.

4. Dewatering and careful construction practices will be required to maintain the exposed subgrade in a stable condition. It may be necessary that a mudmat be placed on the bearing surface as soon as the excavation is complete and the Geotechnical Engineer has confirmed the soil bearing capacity. The mudmat may consist of 12 inches of compacted coarse angular gravel or lean concrete.

5. Temporary excavations in excess of 4.0 feet in depth should be sloped or shored according to OSHA requirements. Excavations to a depth of 10 feet may be laid back at a rate no steeper than 2:1 (Horizontal to Vertical).

6. Fill material may consist of crushed limestone No. 53 Stone or sand and gravel material may be used. Topsoil, fat clays and organically contaminated soils are not suitable for use as engineered fill. Engineered fill placed below footings shall be limited to sand and gravel soils or crushed limestone. All fill materials should be observed and approved by the Geotechnical Engineer.

7. The engineered fill should be placed in layers not to exceed 8 inches in loose thickness with each layer compacted to 100 percent of the maximum dry density as determined by ASTM D-698 standard method, or as otherwise specified by the Geotechnical Engineer.

B. General Site Preparation and Earthwork

1. All surface objects, trees including stumps, grass, vegetation, topsoil and roots, shall be removed from within the construction limits. Topsoil can be stockpiled separately and reused for landscaping purposes. Any fill encountered from the previously demolished building during construction should be removed.

2. Excavations to proposed foundation levels into the underlying soils may be accomplished using conventional excavation equipment.

3. Below ground utilities located within 5 feet of the foundations of the proposed structure should be relocated. Excavations resulting from removal of any existing underground utilities should be backfilled with compacted approved fill.

4. During earthwork operations, care should be taken to provide adequate drainage on the exposed soils. Absorption of heavy rainfall, accumulations of water and heavy construction traffic may result in softening of these soils, hence, severely weakening the strength of the subgrade soils.

5. On-site excavated soils (except topsoil, fat clays and soils with more than 5 percent organics) are considered suitable for use for backfill above the foundation provided proper moisture content is maintained during placement. The excavated soils may exhibit natural moisture content above the optimum moisture. Such soils may require air-drying and/or chemical modification prior to placement.

6. Borrow material required for the project should consist of approved silt-clay soil and/or sand and gravel material. Topsoil, organically contaminated material and/or soils with Liquid Limit of more than 50 percent are not suitable for use as fill. Additionally, soils with a maximum dry weight of less than 100 pounds per cubic foot should not be used in the upper 12 inches of the subgrade beneath sidewalks and paving areas. All fill material should be inspected and approved by the Engineer

7. Fill supporting structures should be compacted to 100 percent of the material's standard Proctor maximum dry density (MDD) as determined by ASTM D 698. A reduced percentage of compaction can be used in lawn or grass areas. The engineered fill should not be placed in a frozen condition or over a frozen subgrade.

8. Depending upon the time of construction and seasonal amount of precipitation, ponding and/or perched water may be encountered in some locations. In such an event, water should be diverted through trenches or otherwise as directed by the Engineer.

C. Groundwater Control

Delayed groundwater levels were recorded at depths ranging between 13.5 to 14.3 feet below the existing grade. Groundwater should be anticipated during the excavations for the foundations.

During construction, it is recommended that the groundwater level be maintained at least 4 feet below the deepest anticipated excavation at the structures. The ground water level should be maintained at this level until the structure is complete and the backfill is placed around the structure. Sumps pumps located inside the excavation will likely be necessary to control seepage water.

The design of a dewatering system or systems for this project is beyond the scope of this investigation. An experienced Dewatering Contractor familiar with projects of similar scope and size should design, install and monitor the dewatering system for any proposed excavation where water will likely be encountered. The dewatering system should be carefully designed so that adjacent structures are not

adversely affected by the operation. The pumping rate should be calculated and screen sizes determined so as to prevent removal of fine-grained soils, which could result in settlement of adjacent buildings and utilities, or the collapse of excavation sidewalls and pavements. Pumped water should be disposed of in a legal manner.

V. CONCLUDING REMARKS

The evaluations, conclusions, and recommendations in this report are based on our interpretation of the field and laboratory data obtained during the exploration, information available at the time of this report, our understanding of the project scope at the time of the report and our experience with similar sites and subsurface conditions using generally accepted geotechnical engineering practices. Although individual test borings are representative of the subsurface conditions at the boring locations on the dates drilled, they are not necessarily representative of the subsurface conditions between boring locations or subsurface conditions during other seasons of the year. If the scope of the project changes the recommendations may change and may require additional investigation.

During the design process, it is recommended that CTL work with the project designers to confirm that the geotechnical recommendations are properly incorporated into the final plans and specifications, and to assist with establishing criteria for the construction observation and testing. CTL is not responsible for independent conclusions, opinions and recommendations made by others based on the data and the recommendations provided in this report.

The report was prepared by CTL Engineering, Inc. (Consultant) solely for the use of the Client in accordance with an executed contract. The Client's use of or reliance on this report is limited by the terms and conditions of the contract and by the qualifications and limitations stated in the report. It is also acknowledged that the Client's use of and reliance of this report is limited for reasons which include: actual site conditions that may change with time; hidden conditions, not discoverable within the scope of the assessment, may exist at the site; and the scope of the investigation may have been limited by time, budget and other constraints imposed by the Client.

Neither the report, nor its contents, conclusions nor recommendations are intended for the use of any party other than the Client. Consultant and the Client assume no liability for any reliance placed on this report by such party. The rights of the Client under contract may not be assigned to any person or entity, without the consent of the Consultant which consent shall not be unreasonably withheld.

This geotechnical report does not address the environmental conditions of the site. The Consultant is not responsible for consequences or conditions arising from facts that were concealed, withheld, or not fully disclosed at the time the assessment was conducted.

To the fullest extent permitted by law, the Consultant and Client agree to indemnify and hold each other, and their officers and employees harmless from and against claims, damages, losses and expenses arising out of unknown or concealed conditions. Furthermore, neither the Consultant nor its employees shall be liable to the Owner in an amount in excess of the available professional liability insurance coverage of the Consultant. In addition, Client and Consultant agree neither shall be liable for any special, indirect or consequential damages of any kind or nature.

The Consultant's services have been provided consistent with its professional standard of care. No other warranties are made, either expressed or implied.

Sincerely,

CTL ENGINEERING, INC.



Anthony L. Mason, PE
Geotechnical Service Line Manager

Fawzy Ezzein

Fawzy Ezzein, Ph.D
Project Geotechnical Engineer

APPENDIX A

PROJECT LOCATION PLAN
BORING LOCATION PLAN

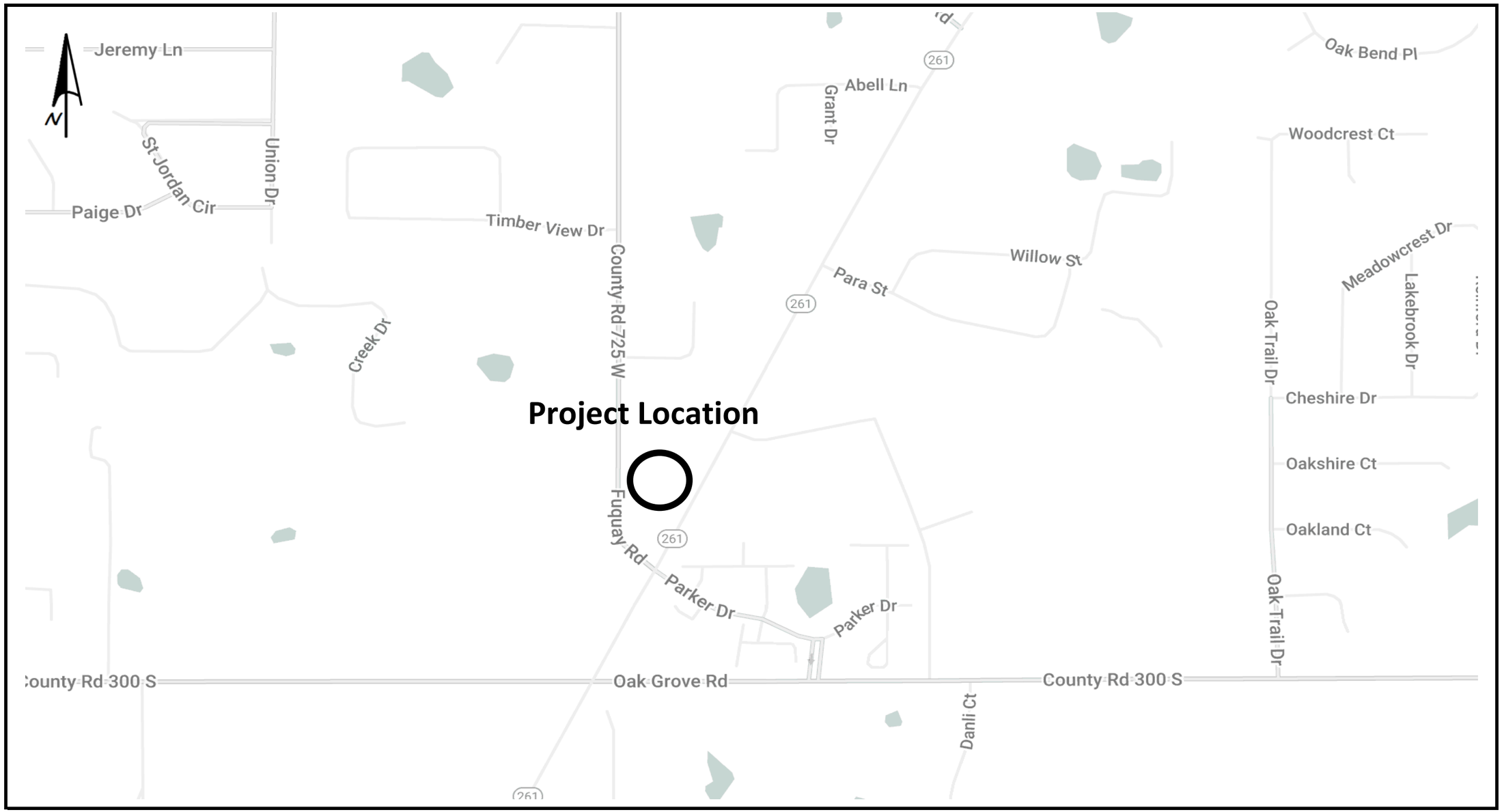

PROJECT LOCATION PLAN					
Source: Google Maps		**Date** 12/30/2024	Geotechnical Exploration Beam, Longest and Neff 1.5 Million Gallon Water Tank Chandler, Indiana		
CTL ENGINEERING	***CTL ENGINEERING, INC.*** GEOTECHNICAL ENGINEERS TESTING * INSPECTION LABORATORY SERVICES	**Scale** None			
		Drawn By FE	**Reviewed By** AM	**Page** 1 of 1	**Project No.** 24050125IND

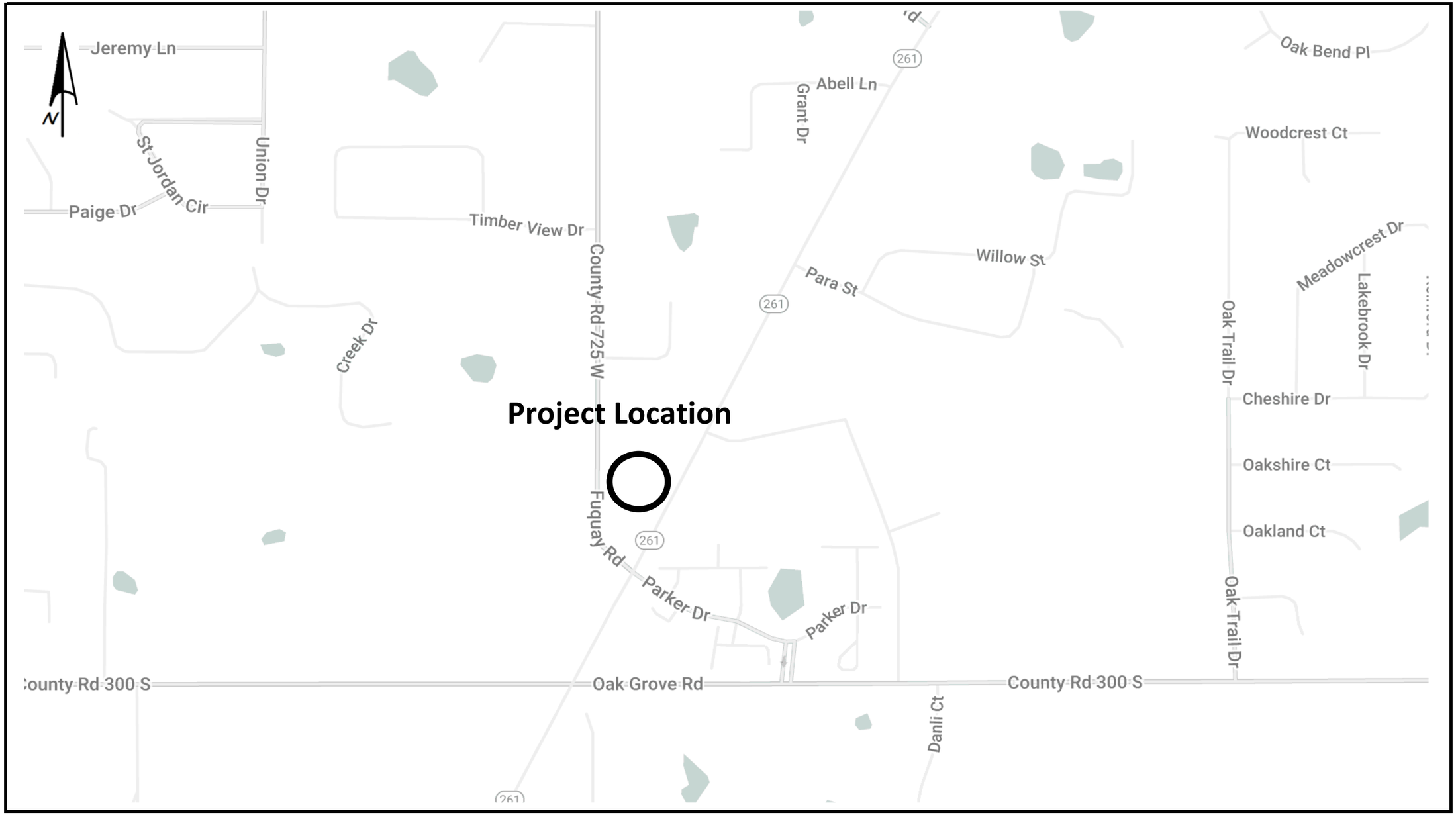

PROJECT LOCATION PLAN					
Source: Google Maps		**Date** 1/27/2025	Geotechnical Exploration Beam, Longest and Neff 1.5 Million Gallon Water Tank Chandler, Indiana		
CTL ENGINEERING	***CTL ENGINEERING, INC.*** GEOTECHNICAL ENGINEERS TESTING * INSPECTION LABORATORY SERVICES	**Scale** None			
		Drawn By FE	**Reviewed By** AM	**Page** 1 of 1	**Project No.** 24050125IND



BORING LOCATION PLAN					
Source: Google Earth		**Date** 1/27/2025	Geotechnical Exploration Beam, Longest and Neff 1.5 Million Gallon Water Tank Chandler, Indiana		
CTL ENGINEERING INC.	***CTL ENGINEERING, INC.*** GEOTECHNICAL ENGINEERS TESTING * INSPECTION LABORATORY SERVICES	**Scale** None			
		Drawn By FE	**Reviewed By** AM	**Page** 1 of 1	**Project No.** 24050125IND

APPENDIX B

ASTM LEGEND
TEST BORING RECORDS
ROCK CORE PHOTOGRAPHS

SOIL DESCRIPTIONS BASED ON THE UNIFIED SOIL CLASSIFICATION SYSTEM

ASTM D 2487 and D 2488

Major Division			Group Symbol	Letter Symbol	Group Name*
Coarse Grained Soils Less Than 50 Percent Passing the # 200 Sieve	Gravel - Percent GRAVEL > percent SAND	Gravel with < 5% Fines		GW	Well Graded GRAVEL
				GP	Poorly Graded GRAVEL
		Gravel with Between 5 and 15% Fines		GW-GM	Well Graded GRAVEL with silt
				GW-GC	Well Graded Gravel with clay
				GP-GM	Poorly Graded GRAVEL with silt
				GP-GC	Poorly Graded GRAVEL with clay
		Gravel with ≥ 15% Fines		GM	Silty GRAVEL
				GC	Clayey GRAVEL
	Sand - Percent SAND ≥ percent GRAVEL	Sand with < 5% Fines		SW	Well Graded SAND
				SP	Poorly Graded SAND
		Sand with Between 5 and 15% Fines		SW-SM	Well Graded SAND with silt
				SW-SC	Well Graded SAND with clay
				SP-SM	Poorly Graded SAND with silt
				SP-SC	Poorly Graded SAND with clay
		Sand with ≥ 15% Fines		SM	Silty SAND
				SC	Clayey SAND
Fine Grained Soils 50 percent or more Passing the # 200 Sieve	SILT and CLAY	Liquid Limit Less Than 50		ML	SILT
				CL	Lean CLAY
				CL-ML	SILTY CLAY
				OL	Organic SILT, CLAY, or SILTY CLAY
		Liquid Limit 50 or Greater		MH	Elastic SILT
				CH	Fat CLAY
				OH	Organic SILT or CLAY
Highly Organic Soils				PT	Peat

* Additional Modifiers			
	Coarse Grained Soils	with silt or clay	5 to 12 % Silt or Clay by weight
		Silty or Clayey	more than 12 % Silt or Clay by weight
	Fine Grained Soils	with sand or gravel	15 to 29 % Sand or Gravel by weight
		Sandy or Gravelly	30 % or more Sand or Gravel by weight

"A" LINE GRAPH

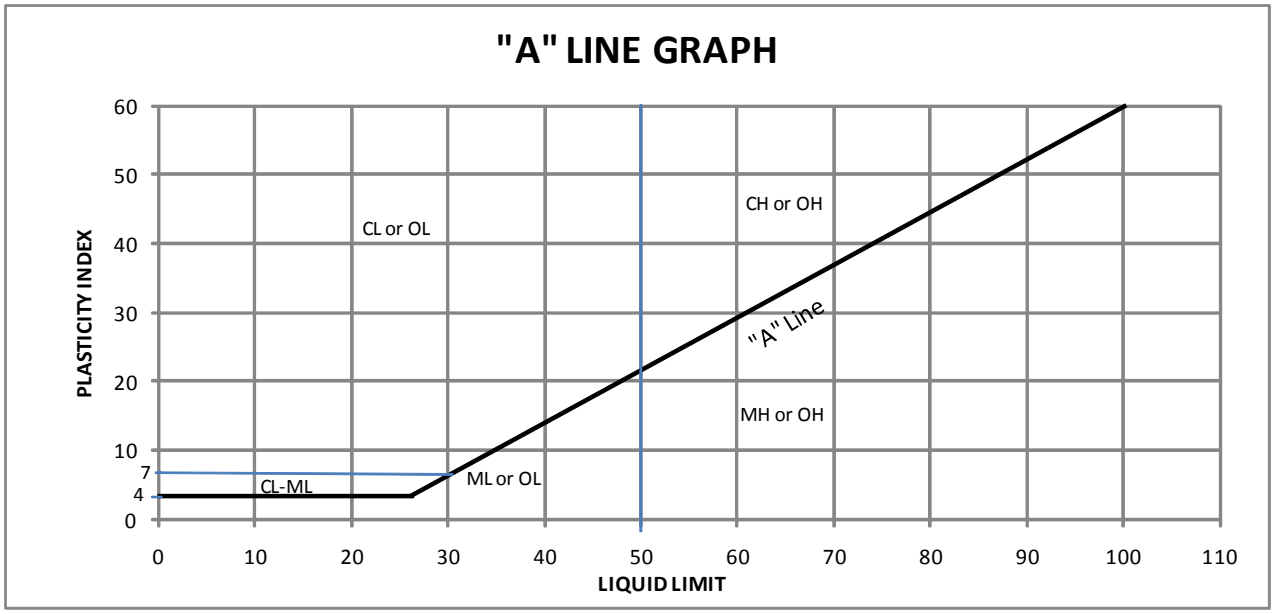

□O□□□E□CR□PT□O□

□O□□CO□E□□□E □O□□□E□CR□PT□O□	□T□□□□R□PE□ETR□T□O□ □□O□ CO□□T□PER□OOT□□P□□
Very Loose	0 - 4
Loose	5 - 10
Medium Dense	11 - 30
Dense	31 - 50
Very Dense	Over 50

CO□E□□□E□O□□ □E□CR□PT□O□	□T□□□□R□PE□ETR□T□O□ □□O□ CO□□T□PER□OOT□□P□□
Very Soft	0 - 1
Soft	2 - 4
Medium Stiff	5 - 8
Stiff	9 - 15
Very Stiff	16 - 30
Hard	Over 30

□R□□□T□O□ COMPO□E□T	□□□E
Boulders	Larger than 8"
Cobbles	8" - 3"
Gravel	Passing 3" Retained on #4
Sand	Passing #4 Retained on #200
Silt	0.075 mm to 0.005 mm
Clay	Smaller than 0.005 mm

COMPO□E□T MO□□□ER□	□□□E
Traces	0 - 10%
Little	11 - 20%
Some	21 - 35%
And	36 - 50%

MO□□T□RE □TERM□	□E□CR□PT□O□
Dry	Powdery
Damp	Below Plastic
Moist	Above Plastic Limit & Below Liquid Limit
Wet	Above Liquid Limit

TEST BORING RECORD

CLIENT : Beam, Longest and Neff
PROJECT : 1.5 Million Gallon Water Tank
LOCATION : Fuquay Road and SR 261, Chandler, Indiana
PROJECT NO. : 24050125IND

BORING NO.: **B-1**
SHEET 1 OF 3
DATE STARTED : 11-25-24
DATE COMPLETED : 11-25-24

Boring Elevation : 469 Feet
Latitude : 37.993217
Longitude : -87.381302
Boring Depth : 50.0 Feet
Station :
Offset :
Line :

Boring Method : HSA
Rig Type : CME- 550 ATV
Casing Diameter : 3.25" I.D.
Core Size : ---

Hammer : Automatic
Hammer Efficiency : 79.5%
Driller : J. Stierwalt
Temperature : 90° F
Weather : Rain

GROUNDWATER: Encountered at Dry | At completion 5.7' | Delayed Reading 14.0' @ 5Hrs | Caved in at 30.3'

Stratum Elevation	Sample Depth	SOIL/MATERIAL DESCRIPTION	Stratum Depth	Sample Number	SPT per 6"	SPT per 12" (N)	Recovery (%)	Moisture Content (%)	Total Unit Weight (pcf)	Unconfined Compression (ksf)	Atterberg Limits LL	PL	PI
468.5		**CRUSHED STONE** (6")	0.5										
				SS-1	2 3 4	7	100	20					
	5			SS-2	5 5 6	11	100	23					
				SS-3	3 3 4	7	100	19					
	10	Brown, Very Moist, Medium Stiff to Stiff, **LEAN CLAY (CL)** (Lab 1)		SS-4	3 4 4	8	100	20	130.8	3.5 @ 13.5%			
	15			SS-5	2 6 6	12	100	20			35	16	19
452.0			17.0										
	20	Reddish Brown and Gray, Very Moist, Very Stiff, **LEAN CLAY (CL)** (As Lab 3)		SS-6	8 8 8	16	100	21					

Continued on next page

CTL ENGINEERING
CTL Engineering, Inc.
Phone: 317-295-8650

BORING METHOD		SAMPLING METHOD		ABBREVIATIONS	
HSA	Hollow Stem Auger	SS	Split Spoon Sample	*	Hand Penetrometer
SFA	Solid Flight Auger	ST	Shelby Tube Sample	LL	Liquid Limit
RC	Rock Coring	CR	Rock Core Sample	PL	Plastic Limit
MD	Mud Drilling	BS	Bag Sample	PI	Plasticity Index
WD	Wash Drilling	AC	Auger Cuttings	SPT	Standard Penetration Test
HA	Hand Auger				

TEST BORING RECORD

CLIENT : Beam, Longest and Neff

BORING NO.: **B-1**

PROJECT : 1.5 Million Gallon Water Tank

SHEET 2 OF 3

Stratum Elevation	Sample Depth	SOIL/MATERIAL DESCRIPTION	Stratum Depth	Sample Number	SPT per 6"	SPT per 12" (N)	Recovery (%)	Moisture Content (%)	Total Unit Weight (pcf)	Unconfined Compression (ksf)	Atterberg Limits LL	PL	PI
447.0			22.0										
				SS-7	35 50/2		87	14			NP	NP	NP
	25												
		Brown, Wet, Very Dense to Dense, **SILTY SAND (SM)** with SANDSTONE Fragments **RESIDUAL SOIL** (As Lab 2)		SS-8	48 50/1		100	13					
	30												
					16								
434.5			34.5	SS-9	19	38	100	11					
434.0	35	Black and Gray, **PEAT (PT)** (Visual)	35.0		19								
		Gray, Soft, Highly Weathered **SHALE**											
				SS-10	39 50/2		100	7					
429.0	40		40.0										
		Gray, Hard, Slightly to Moderately Weathered **LIMESTONE**		RC-1 RQD= 46%			78						
426.1			42.9										
	45	Gray, Soft, Highly Weathered **SHALE**											
422.3			46.7	RC-2									

Continued on next page

CTL Engineering, Inc.
Phone: 317-295-8650

BORING METHOD		SAMPLING METHOD		ABBREVIATIONS	
HSA	Hollow Stem Auger	SS	Split Spoon Sample	*	Hand Penetrometer
SFA	Solid Flight Auger	ST	Shelby Tube Sample	LL	Liquid Limit
RC	Rock Coring	CR	Rock Core Sample	PL	Plastic Limit
MD	Mud Drilling	BS	Bag Sample	PI	Plasticity Index
WD	Wash Drilling	AC	Auger Cuttings	SPT	Standard Penetration Test
HA	Hand Auger				

TEST BORING RECORD

CLIENT : Beam, Longest and Neff

BORING NO.: **B-1**

PROJECT : 1.5 Million Gallon Water Tank

SHEET 3 OF 3

Stratum Elevation	Sample Depth	SOIL/MATERIAL DESCRIPTION	Stratum Depth	Sample Number	SPT per 6"	SPT per 12" (N)	Recovery (%)	Moisture Content (%)	Total Unit Weight (pcf)	Unconfined Compression (ksf)	Atterberg Limits LL	PL	PI
		Gray, Hard, Slightly to Moderately Weathered **LIMESTONE**		RQD= 57%			88						
419.5			49.5										
419.0	50	Gray, Hard, Slightly Weathered **SHALE**	50.0										
		Bottom of Boring at 50.0 feet											
		Auger Refusal encountered at 40.0 feet											
		Boring backfilled according to Aquifer Protection Guidelines											
	55												
	60												
	65												
	70												

CTL Engineering, Inc.
Phone: 317-295-8650

BORING METHOD		SAMPLING METHOD		ABBREVIATIONS	
HSA	Hollow Stem Auger	SS	Split Spoon Sample	*	Hand Penetrometer
SFA	Solid Flight Auger	ST	Shelby Tube Sample	LL	Liquid Limit
RC	Rock Coring	CR	Rock Core Sample	PL	Plastic Limit
MD	Mud Drilling	BS	Bag Sample	PI	Plasticity Index
WD	Wash Drilling	AC	Auger Cuttings	SPT	Standard Penetration Test
HA	Hand Auger				

TEST BORING RECORD

CLIENT : Beam, Longest and Neff
PROJECT : 1.5 Million Gallon Water Tank
LOCATION : Fuquay Road and SR 261, Chandler, Indiana
PROJECT NO. : 24050125IND

BORING NO.: **B-2**
SHEET 1 OF 2
DATE STARTED : 11-26-24
DATE COMPLETED : 11-26-24

Boring Elevation : 468 Feet
Latitude : 37.993135
Longitude : -87.381201
Boring Depth : 24.0 Feet
Station :
Offset :
Line :

Boring Method : HSA
Rig Type : CME- 550 ATV
Casing Diameter : 3.25" I.D.
Core Size : ---

Hammer : Automatic
Hammer Efficiency : 79.5%
Driller : J. Stierwalt
Temperature : 90° F
Weather : Rain

GROUNDWATER: Encountered at Dry At completion Dry Delayed Reading 13.5' @ 24Hrs Caved in at 14.0'

Stratum Elevation	Sample Depth	SOIL/MATERIAL DESCRIPTION	Stratum Depth	Sample Number	SPT per 6"	SPT per 12" (N)	Recovery (%)	Moisture Content (%)	Total Unit Weight (pcf)	Unconfined Compression (ksf)	Atterberg Limits LL	PL	PI
467.0		**CRUSHED STONE with SAND** (12")	1.0										
		Brown, Very Moist, Medium Stiff to Stiff, **LEAN CLAY (CL)** with Traces of Bricks **(FILL)** (As Lab 1)		SS-1	4 3 2	5	100	21					
	5			SS-2	8 6 8	14	0						
462.0			6.0										
				SS-3	3 4 5	9	100	22	131.5	2.0 @ 15.0%			
	10			SS-4	3 5 5	10	67	21					
		Brown, Very Moist, Stiff, **LEAN CLAY (CL)** (As Lab 1)											
	15			SS-5	6 6 6	12	100	19					
451.0			17.0										
		Reddish Brown and Gray, Very Moist, Stiff, **LEAN CLAY (CL)** (Lab 3)		SS-6	4 7 8	15	100	22			35	16	19
	20												
447.0			21.0										

Continued on next page

CTL Engineering, Inc.
Phone: 317-295-8650

BORING METHOD		SAMPLING METHOD		ABBREVIATIONS	
HSA	Hollow Stem Auger	SS	Split Spoon Sample	*	Hand Penetrometer
SFA	Solid Flight Auger	ST	Shelby Tube Sample	LL	Liquid Limit
RC	Rock Coring	CR	Rock Core Sample	PL	Plastic Limit
MD	Mud Drilling	BS	Bag Sample	PI	Plasticity Index
WD	Wash Drilling	AC	Auger Cuttings	SPT	Standard Penetration Test
HA	Hand Auger				

TEST BORING RECORD

CLIENT : Beam, Longest and Neff

BORING NO.: **B-2**

PROJECT : 1.5 Million Gallon Water Tank

SHEET 2 OF 2

Stratum Elevation	Sample Depth	SOIL/MATERIAL DESCRIPTION	Stratum Depth	Sample Number	SPT per 6"	SPT per 12" (N)	Recovery (%)	Moisture Content (%)	Total Unit Weight (pcf)	Unconfined Compression (ksf)	Atterberg Limits LL	PL	PI
443.5		Brown, Wet, Very Dense, **SILTY SAND (SM)** with SANDSTONE Fragments **RESIDUAL SOIL** (As Lab 2)	24.5	SS-7	41 50/2		58	12					
	25	**Bottom of Boring at 24.5 feet** **Auger Refusal encountered at 24.5 feet, suspected due to boulder** Boring backfilled according to Aquifer Protection Guidelines											
	30												
	35												
	40												
	45												

CTL Engineering, Inc.
Phone: 317-295-8650

BORING METHOD		SAMPLING METHOD		ABBREVIATIONS	
HSA	Hollow Stem Auger	SS	Split Spoon Sample	*	Hand Penetrometer
SFA	Solid Flight Auger	ST	Shelby Tube Sample	LL	Liquid Limit
RC	Rock Coring	CR	Rock Core Sample	PL	Plastic Limit
MD	Mud Drilling	BS	Bag Sample	PI	Plasticity Index
WD	Wash Drilling	AC	Auger Cuttings	SPT	Standard Penetration Test
HA	Hand Auger				

TEST BORING RECORD

CLIENT : Beam, Longest and Neff
PROJECT : 1.5 Million Gallon Water Tank
LOCATION : Fuquay Road and SR 261, Chandler, Indiana
PROJECT NO. : 24050125IND

BORING NO.: **B-2A**
SHEET 1 OF 1
DATE STARTED : 11-26-24
DATE COMPLETED : 11-26-24

Boring Elevation : 467 Feet
Latitude : 37.993135
Longitude : -87.381201
Boring Depth : 8.0 Feet
Station :
Offset :
Line :

Boring Method : HSA
Rig Type : CME- 550 ATV
Casing Diameter : 3.25" I.D.
Core Size : ---

Hammer : Automatic
Hammer Efficiency : 79.5%
Driller : J. Stierwalt
Temperature : 80° F
Weather : Rain

GROUNDWATER:

Stratum Elevation	Sample Depth	SOIL/MATERIAL DESCRIPTION	Stratum Depth	Sample Number	SPT per 6"	SPT per 12" (N)	Recovery (%)	Moisture Content (%)	Total Unit Weight (pcf)	Unconfined Compression (ksf)	Atterberg Limits LL	PL	PI
	5	(Refer to boring B-2 for soil descriptions)		ST-1			88	38			27	18	9
459.0			8.0										
		Bottom of Boring at 8.0 feet											
	10	Boring backfilled according to Aquifer Protection Guidelines											
	15												
	20												

CTL Engineering, Inc.
Phone: 317-295-8650

BORING METHOD		SAMPLING METHOD		ABBREVIATIONS	
HSA	- Hollow Stem Auger	SS	- Split Spoon Sample	*	- Hand Penetrometer
SFA	- Solid Flight Auger	ST	- Shelby Tube Sample	LL	- Liquid Limit
RC	- Rock Coring	CR	- Rock Core Sample	PL	- Plastic Limit
MD	- Mud Drilling	BS	- Bag Sample	PI	- Plasticity Index
WD	- Wash Drilling	AC	- Auger Cuttings	SPT	- Standard Penetration Test
HA	- Hand Auger				

TEST BORING RECORD

CLIENT : Beam, Longest and Neff
PROJECT : 1.5 Million Gallon Water Tank
LOCATION : Fuquay Road and SR 261, Chandler, Indiana
PROJECT NO. : 24050125IND

BORING NO.: **B-3**
SHEET 1 OF 2
DATE STARTED : 11-26-24
DATE COMPLETED : 11-26-24

Boring Elevation : 469 Feet
Latitude : 37.993133
Longitude : -87.381402
Boring Depth : 25.0 Feet
Station :
Offset :
Line :

Boring Method : HSA
Rig Type : CME- 550 ATV
Casing Diameter : 3.25" I.D.
Core Size : ---

Hammer : Automatic
Hammer Efficiency : 79.5%
Driller : J. Stierwalt
Temperature : 80° F
Weather : Rain

GROUNDWATER: Encountered at Dry At completion Dry Delayed Reading 14.3' @ 1Hr Caved in at 15.2'

Stratum Elevation	Sample Depth	SOIL/MATERIAL DESCRIPTION	Stratum Depth	Sample Number	SPT per 6"	SPT per 12" (N)	Recovery (%)	Moisture Content (%)	Total Unit Weight (pcf)	Unconfined Compression (ksf)	Atterberg Limits LL	PL	PI
468.0		**CRUSHED STONE with SAND and BRICKS** (12")	1.0										
				SS-1	4 3 3	6	67	21					
				SS-2	5 6 7	13	56	20					
	5	Brown, Very Moist, Medium Stiff to Stiff, **LEAN CLAY (CL)** (As Lab 1)		SS-3	3 9 6	15	100	22					
				SS-4	3 3 4	7	100	23					
457.0	10		12.0										
				SS-5	3 4 5	9	100	21	129.2	2.7 @ 9.8%			
	15	Reddish Brown and Gray, Very Moist, Stiff, **LEAN CLAY (CL)** (Lab 3)											
450.0			19.0										
	20	Brown, Wet, Dense to Very Dense, **SILTY SAND (SM)** with SANDSTONE Fragments **RESIDUAL SOIL** (As Lab 2)		SS-6	5 9 24	33	100	12					

Continued on next page

CTL ENGINEERING
CTL Engineering, Inc.
Phone: 317-295-8650

BORING METHOD		SAMPLING METHOD		ABBREVIATIONS	
HSA	Hollow Stem Auger	SS	Split Spoon Sample	*	Hand Penetrometer
SFA	Solid Flight Auger	ST	Shelby Tube Sample	LL	Liquid Limit
RC	Rock Coring	CR	Rock Core Sample	PL	Plastic Limit
MD	Mud Drilling	BS	Bag Sample	PI	Plasticity Index
WD	Wash Drilling	AC	Auger Cuttings	SPT	Standard Penetration Test
HA	Hand Auger				

TEST BORING RECORD

CLIENT : Beam, Longest and Neff

BORING NO.: **B-3**

PROJECT : 1.5 Million Gallon Water Tank

SHEET 2 OF 2

Stratum Elevation	Sample Depth	SOIL/MATERIAL DESCRIPTION	Stratum Depth	Sample Number	SPT per 6"	SPT per 12" (N)	Recovery (%)	Moisture Content (%)	Total Unit Weight (pcf)	Unconfined Compression (ksf)	Atterberg Limits LL	PL	PI
444.0	25	Brown, Wet, Dense to Very Dense, **SILTY SAND (SM)** with SANDSTONE Fragments **RESIDUAL SOIL** (As Lab 2)	25.0	SS-7	19 43 50/1		150	11					
		Bottom of Boring at 25.0 feet **Auger Refusal encountered at 25.0 feet, suspected due to boulder** Boring backfilled according to Aquifer Protection Guidelines										
	30												
	35												
	40												
	45												

CTL Engineering, Inc.
Phone: 317-295-8650

BORING METHOD		SAMPLING METHOD		ABBREVIATIONS	
HSA	Hollow Stem Auger	SS	Split Spoon Sample	*	Hand Penetrometer
SFA	Solid Flight Auger	ST	Shelby Tube Sample	LL	Liquid Limit
RC	Rock Coring	CR	Rock Core Sample	PL	Plastic Limit
MD	Mud Drilling	BS	Bag Sample	PI	Plasticity Index
WD	Wash Drilling	AC	Auger Cuttings	SPT	Standard Penetration Test
HA	Hand Auger				

TEST BORING RECORD

CLIENT : Beam, Longest and Neff
PROJECT : 1.5 Million Gallon Water Tank
LOCATION : Fuquay Road and SR 261, Chandler, Indiana
PROJECT NO. : 24050125IND

BORING NO.: **B-4**
SHEET 1 OF 2
DATE STARTED : 11-27-24
DATE COMPLETED : 11-27-24

Boring Elevation : 468 Feet
Latitude : 37.993331
Longitude : -87.381299
Boring Depth : 24.2 Feet
Station :
Offset :
Line :

Boring Method : HSA
Rig Type : CME- 550 ATV
Casing Diameter : 3.25" I.D.
Core Size : ---

Hammer : Automatic
Hammer Efficiency : 79.5%
Driller : J. Stierwalt
Temperature : 90° F
Weather : Rain

GROUNDWATER: Encountered at Dry At completion Dry Delayed Reading Dry @ 1Hr Caved in at 15.0'

Stratum Elevation	Sample Depth	SOIL/MATERIAL DESCRIPTION	Stratum Depth	Sample Number	SPT per 6"	SPT per 12" (N)	Recovery (%)	Moisture Content (%)	Total Unit Weight (pcf)	Unconfined Compression (ksf)	Atterberg Limits LL	PL	PI
467.2		**TOPSOIL** (10")	0.8										
				SS-1	2 3 4	7	100	26					
				SS-2	3 4 4	8	100	25	128.8	2.0 @ 10.0%			
	5			SS-3	3 4 4	8	100	20					
		Brown, Very Moist, Medium Stiff, **LEAN CLAY (CL)** (As Lab 1)		SS-4	2 3 4	7	100	21					
	10												
				SS-5	3 4 4	8	100	23					
	15												
451.0			17.0										
		Reddish Brown and Gray, Very Moist, Stiff, **LEAN CLAY (CL)** with Traces of SHALE Fragments (Lab 3)		SS-6	3 4 8	12	100	25					
	20												

Continued on next page

CTL Engineering, Inc.
Phone: 317-295-8650

BORING METHOD		SAMPLING METHOD		ABBREVIATIONS	
HSA	Hollow Stem Auger	SS	Split Spoon Sample	*	Hand Penetrometer
SFA	Solid Flight Auger	ST	Shelby Tube Sample	LL	Liquid Limit
RC	Rock Coring	CR	Rock Core Sample	PL	Plastic Limit
MD	Mud Drilling	BS	Bag Sample	PI	Plasticity Index
WD	Wash Drilling	AC	Auger Cuttings	SPT	Standard Penetration Test
HA	Hand Auger				

TEST BORING RECORD

CLIENT : Beam, Longest and Neff

BORING NO.: **B-4**

PROJECT : 1.5 Million Gallon Water Tank

SHEET 2 OF 2

Stratum Elevation	Sample Depth	SOIL/MATERIAL DESCRIPTION	Stratum Depth	Sample Number	SPT per 6"	SPT per 12" (N)	Recovery (%)	Moisture Content (%)	Total Unit Weight (pcf)	Unconfined Compression (ksf)	Atterberg Limits LL	PL	PI
446.0			22.0										
		Brown, Wet, Very Dense, **SILTY SAND (SM)** with SANDSTONE Fragments **RESIDUAL SOIL** (As Lab 2)											
443.8			24.2	SS-7	29 50/2		95	19					
		Bottom of Boring at 24.2 feet											
	25	**Auger Refusal encountered at 24.2 feet, suspected due to boulder**											
		Boring backfilled according to Aquifer Protection Guidelines											
	30												
	35												
	40												
	45												

CTL ENGINEERING
CTL Engineering, Inc.
Phone: 317-295-8650

BORING METHOD		SAMPLING METHOD		ABBREVIATIONS	
HSA	- Hollow Stem Auger	SS	- Split Spoon Sample	*	- Hand Penetrometer
SFA	- Solid Flight Auger	ST	- Shelby Tube Sample	LL	- Liquid Limit
RC	- Rock Coring	CR	- Rock Core Sample	PL	- Plastic Limit
MD	- Mud Drilling	BS	- Bag Sample	PI	- Plasticity Index
WD	- Wash Drilling	AC	- Auger Cuttings	SPT	- Standard Penetration Test
HA	- Hand Auger				

ROCK CORE PHOTOGRAPHS

1.5 Million Gallon Water Tank
Chandler, Indiana
CTL Project No.: 24050125IND



Boring No.: B-1			
Core Size: 2” NQ			
Core Run	Depth (ft)	Recovery (%)	RQD (%)
RC-1	40.0 - 45.0	78	46
RC-2	45.0 – 50.0	88	53

Note: Core run increases in depth from left to right and top to bottom

APPENDIX C

LABORATORY TESTING

Summary of Classification Test Results
Grain Size Distribution Curves
Unconfined Compressive Strength Curves
One-Dimensional Consolidation Test Result
Rock Core Compressive Strength Test Results
Summary of Special Laboratory Test Results

Lab No.	Boring No.	Latitude	Longitude	Sample No.	Depth	Soil Classification	ASTM Group	Grain Size Distribution (%)				WC	LL	PL	PI	Max. Dry Density (pcf)	Optimum Moisture Content (%)	CBR (%)		
								Gravel	Sand	Silt	Clay							90%	95%	100%
Lab 1	B-1	37.993217	-87.381302	SS-5	13.5-15.0	LEAN CLAY	CL	0.0	8.0	52.8	39.2	20	35	16	19					
Lab 2	B-1	37.993217	-87.381302	SS-7	23.5-25.0	SILTY SAND	SM	0.0	69.8	19.9	10.3	14	NP	NP	NP					
Lab 3	B-2	37.993135	-87.381201	SS-6	18.5-20.0	LEAN CLAY	CL	0.0	5.0	57.3	37.7	19	35	16	19					

CTL Engineering, Inc.
Phone: 317-295-8650

SUMMARY OF CLASSIFICATION TEST RESULTS

Project: 1.5 Million Gallon Water Tank

Location: Chandler, Indiana

Project No.: 24050125IND

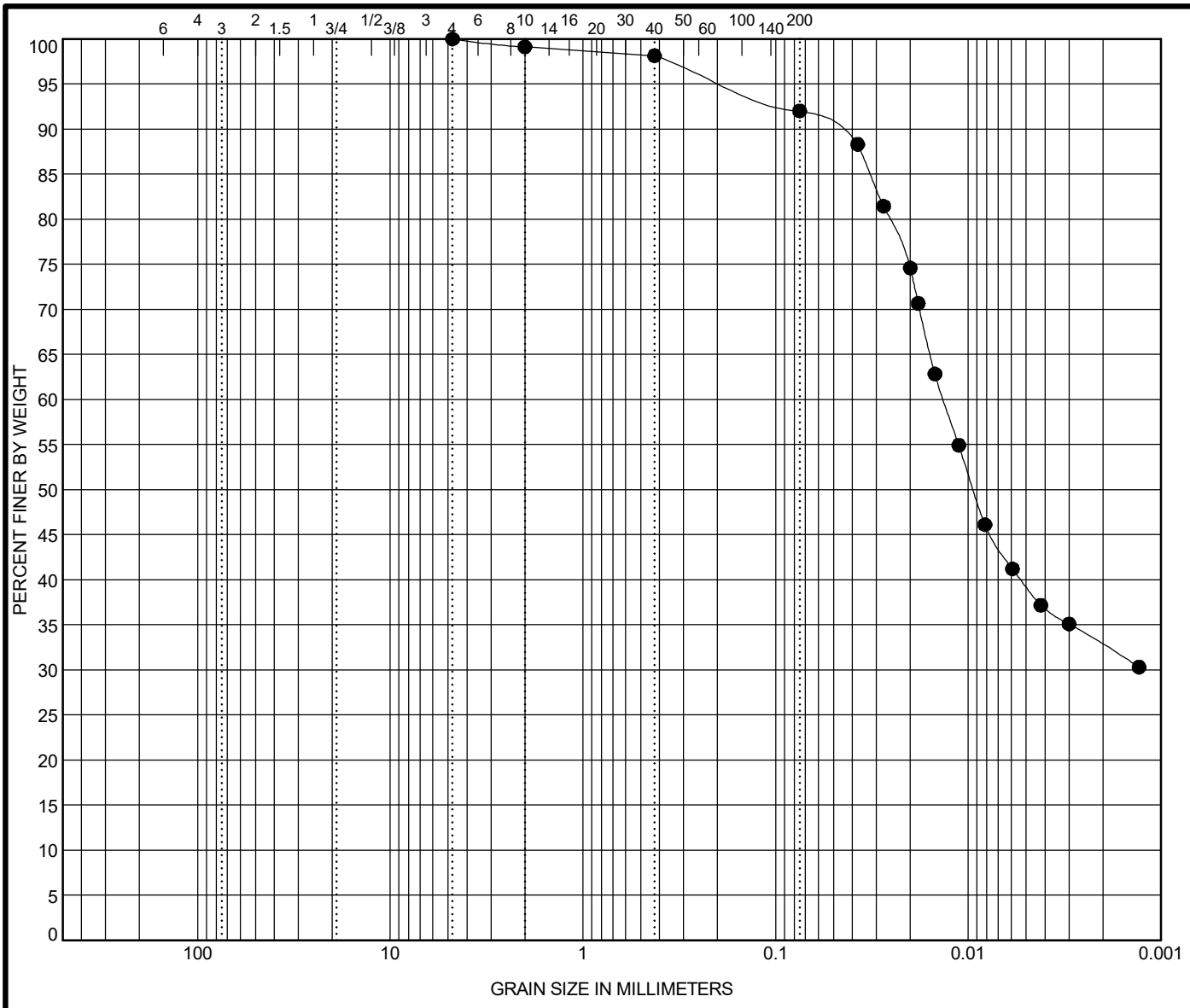

COBBLES	GRAVEL		SAND			SILT OR CLAY
	Coarse	Fine	Coarse	Medium	Fine	

Boring No.	B-1	Classification	MC	LL	PL	PI	Cc	Cu
Sample	SS-5	LEAN CLAY	19.9	35	16	19		
Depth	13.5-15.0	CL						
Latitude	37.993217	Lab 1						
Longitude	-87.381302							

Fine material soaking time	Minutes	D100	D60	D50	D30	D10	%Gravel	%Sand	%Silt	%Clay
		4.75	0.013	0.009			0.0	8.0	52.8	39.2

Remarks

CTL Engineering, Inc.
Phone: 317-295-8650

GRAIN SIZE DISTRIBUTION

Project: 1.5 Million Gallon Water Tank

Location: Chandler, Indiana

CTL Project No.: 24050125IND

U.S. SIEVE OPENING IN INCHES | U.S. SIEVE NUMBERS | HYDROMETER

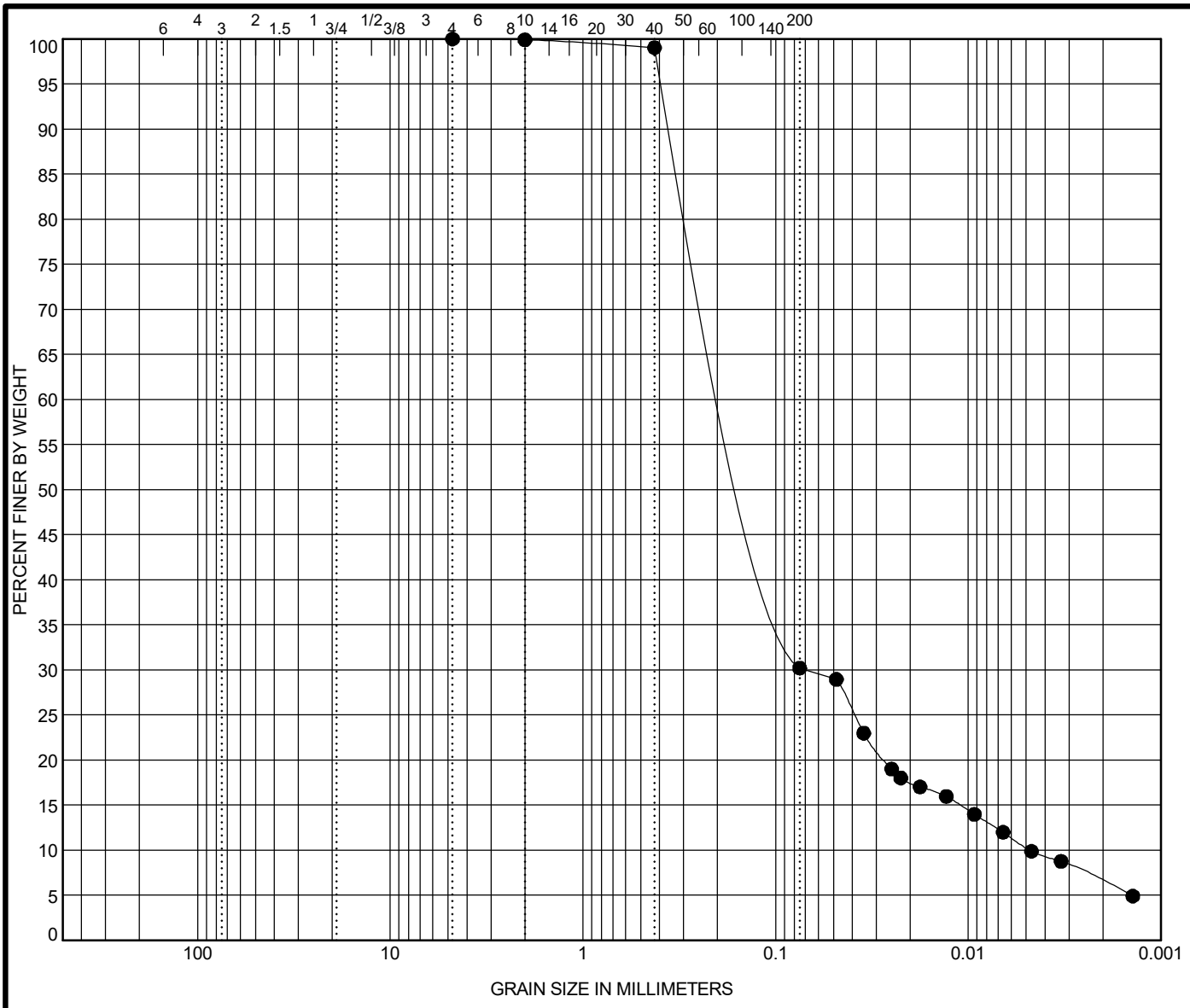

COBBLES	GRAVEL		SAND			SILT OR CLAY
	Coarse	Fine	Coarse	Medium	Fine	

Boring No.	B-1	Classification	MC	LL	PL	PI	Cc	Cu
Sample	SS-7	SILTY SAND	13.7	NP	NP	NP	6.38	33.17
Depth	23.5-25.0	SM						
Latitude	37.993217	Lab 2						
Longitude	-87.381302							

Fine material soaking time	Minutes	D100	D60	D50	D30	D10	%Gravel	%Sand	%Silt	%Clay
		4.75	0.159	0.123	0.07	0.005	0.0	69.8	19.9	10.3

Remarks

CTL Engineering, Inc.
Phone: 317-295-8650

GRAIN SIZE DISTRIBUTION

Project: 1.5 Million Gallon Water Tank

Location: Chandler, Indiana

CTL Project No.: 24050125IND

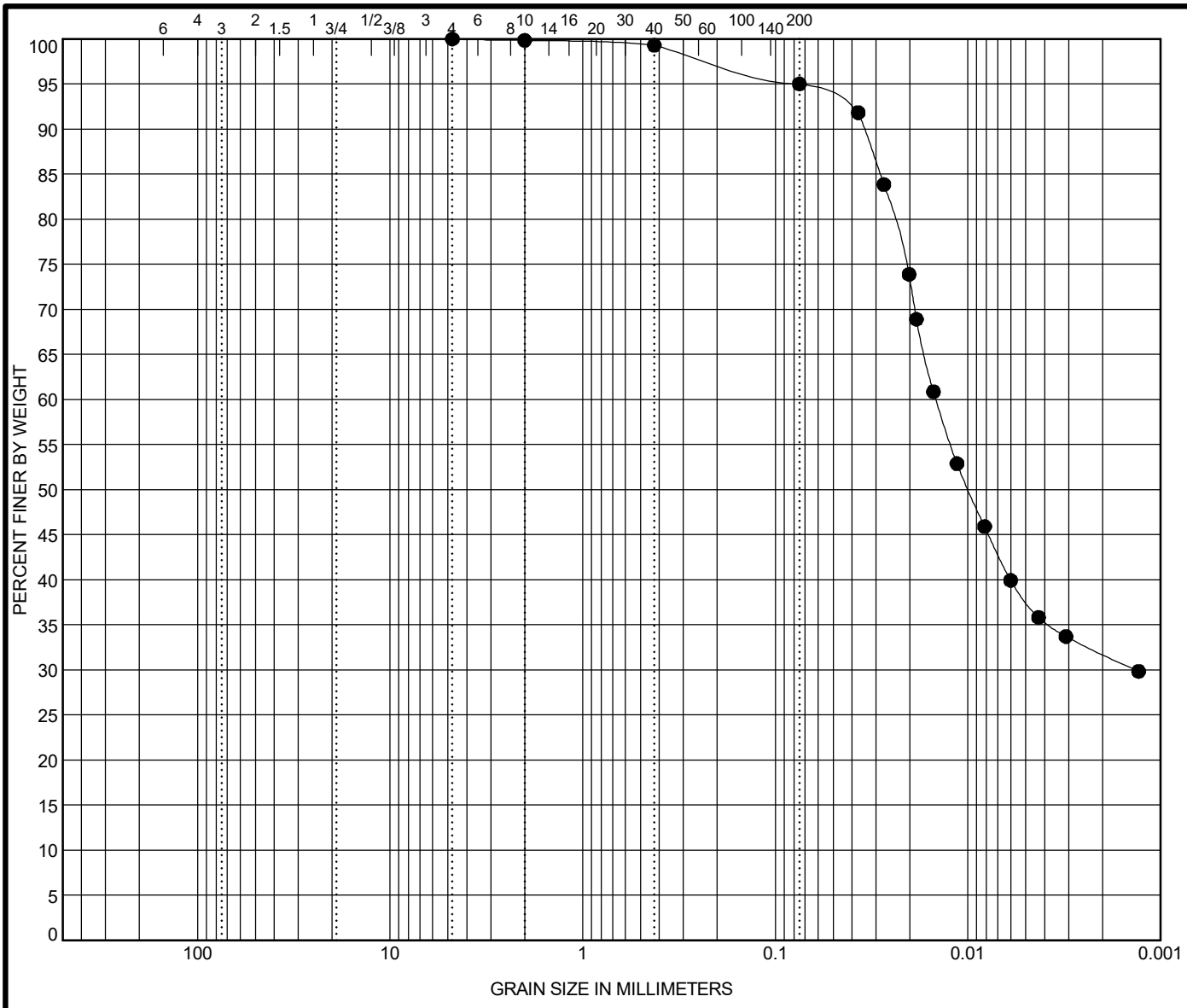

COBBLES	GRAVEL		SAND			SILT OR CLAY
	Coarse	Fine	Coarse	Medium	Fine	

Boring No.	B-2	Classification	MC	LL	PL	PI	Cc	Cu
Sample	SS-6	**LEAN CLAY**	**19.4**	**35**	**16**	**19**		
Depth	**18.5-20.0**	**CL**						
Latitude	**37.993135**	**Lab 3**						
Longitude	**-87.381201**							

Fine material soaking time	Minutes	D100	D60	D50	D30	D10	%Gravel	%Sand	%Silt	%Clay
		4.75	**0.015**	**0.01**	**0.001**		**0.0**	**5.0**	**57.4**	**37.7**

Remarks

CTL Engineering, Inc.
Phone: 317-295-8650

GRAIN SIZE DISTRIBUTION

Project: 1.5 Million Gallon Water Tank

Location: Chandler, Indiana

CTL Project No.: 24050125IND

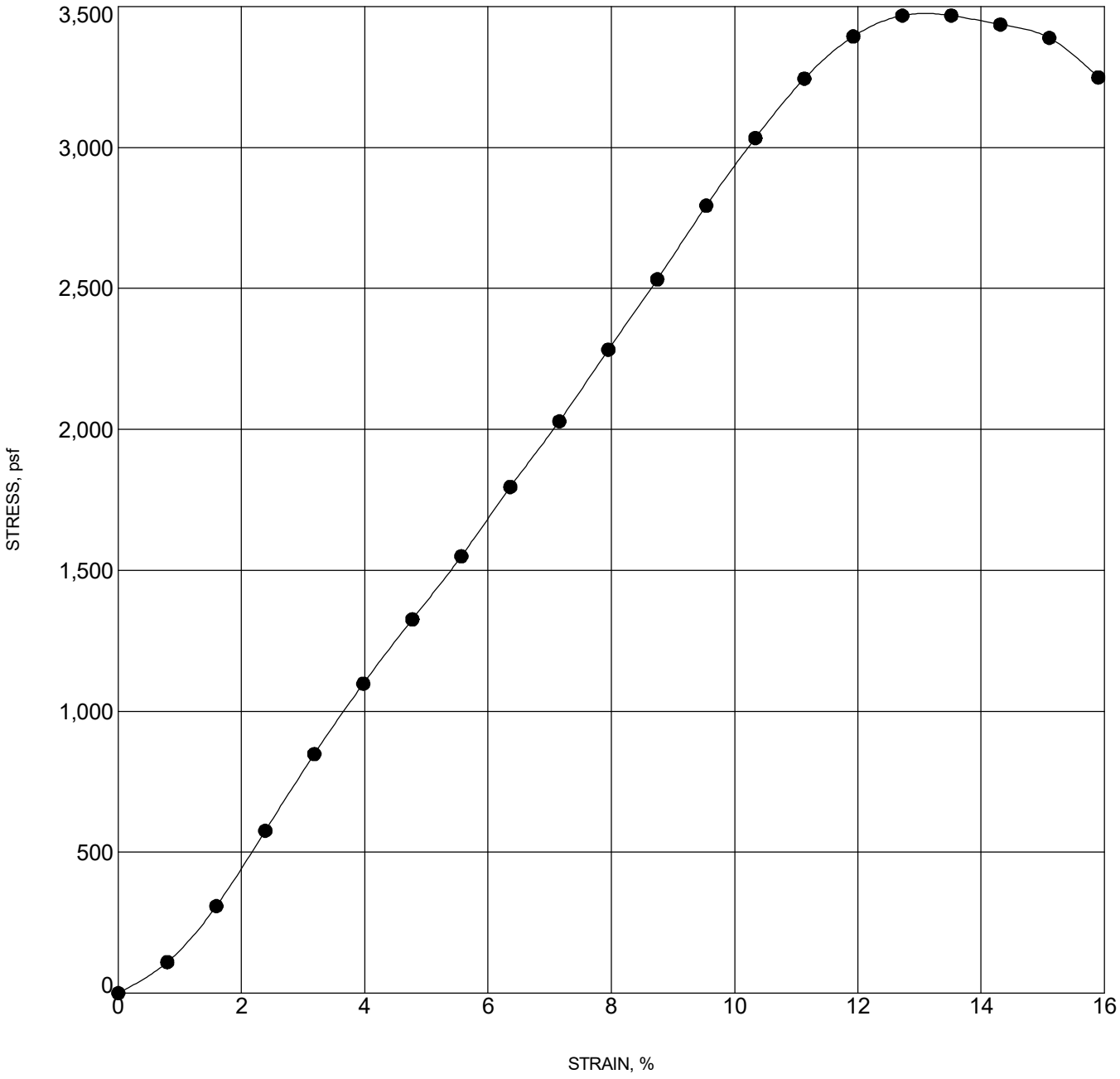

Boring Information		Test Results	
Boring No.	**B-1**	Natural Moisture Content (%)	**15.9**
Sample	**SS-4**	Natural Wet Density, pcf	**130.8**
Depth	**8.5 - 10.0**	Natural Dry Density, pcf	**112.9**
Latitude	**37.993217**	Unconfined Compression Strength, psf	**3468**
Longitude	**-87.381302**	Failure Strain (%)	**13.5**
		SOIL DESCRIPTION	**LEAN CLAY (CL)**

CTL Engineering, Inc.
Phone: 317-295-8650

UNCONFINED COMPRESSIVE STRENGTH

Project: 1.5 Million Gallon Water Tank

Location: Chandler, Indiana

Project No.: 24050125IND

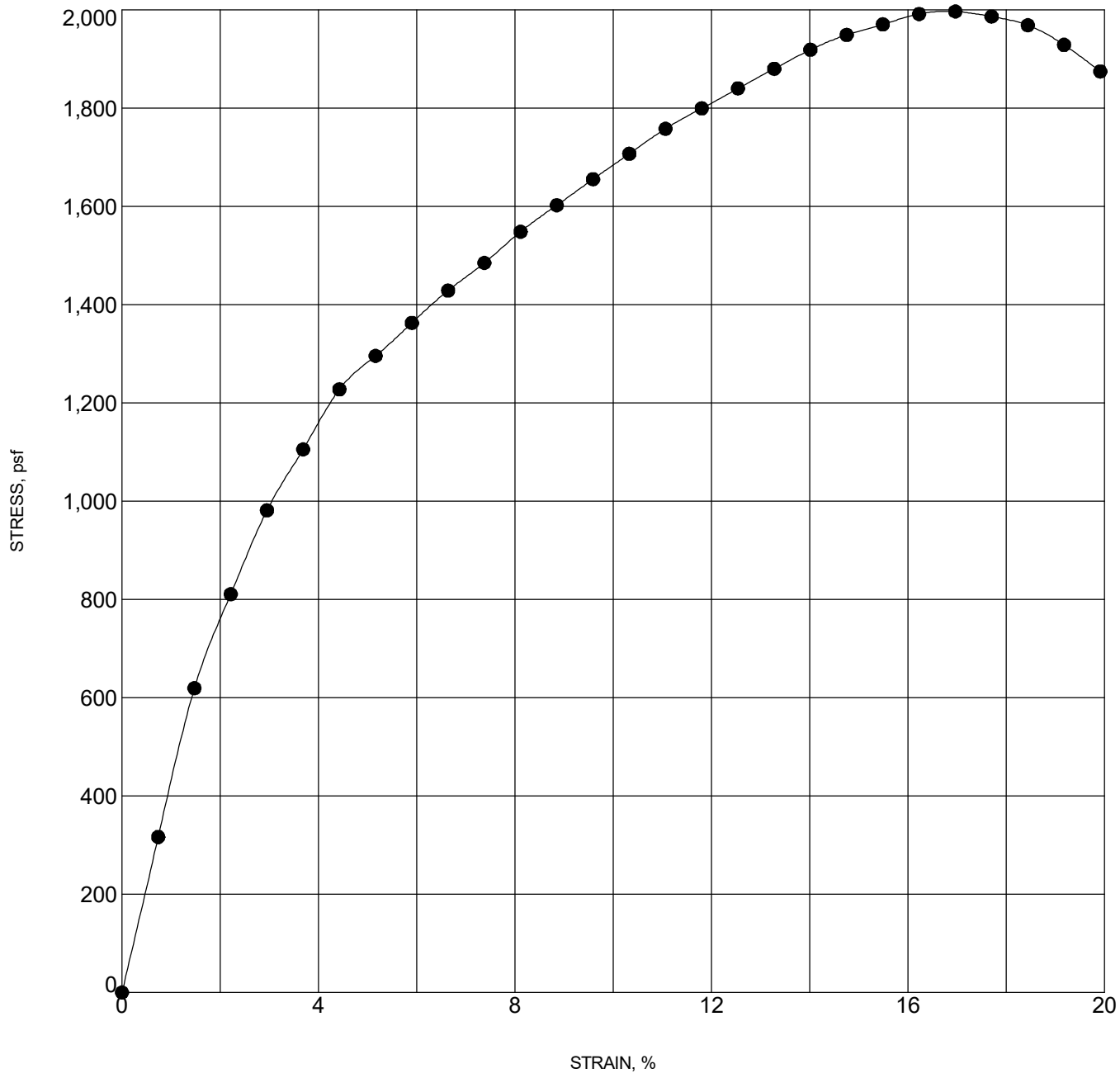

Boring Information		Test Results	
Boring No.	**B-2**	Natural Moisture Content (%)	**21.4**
Sample	**SS-3**	Natural Wet Density, pcf	**131.5**
Depth	**6.0 - 7.5**	Natural Dry Density, pcf	**108.4**
Latitude	**37.993135**	Unconfined Compression Strength, psf	**1956**
Longitude	**-87.381201**	Failure Strain (%)	**15.0**
		SOIL DESCRIPTION	**LEAN CLAY (CL)**

CTL Engineering, Inc.
Phone: 317-295-8650

UNCONFINED COMPRESSIVE STRENGTH

Project: 1.5 Million Gallon Water Tank

Location: Chandler, Indiana

Project No.: 24050125IND

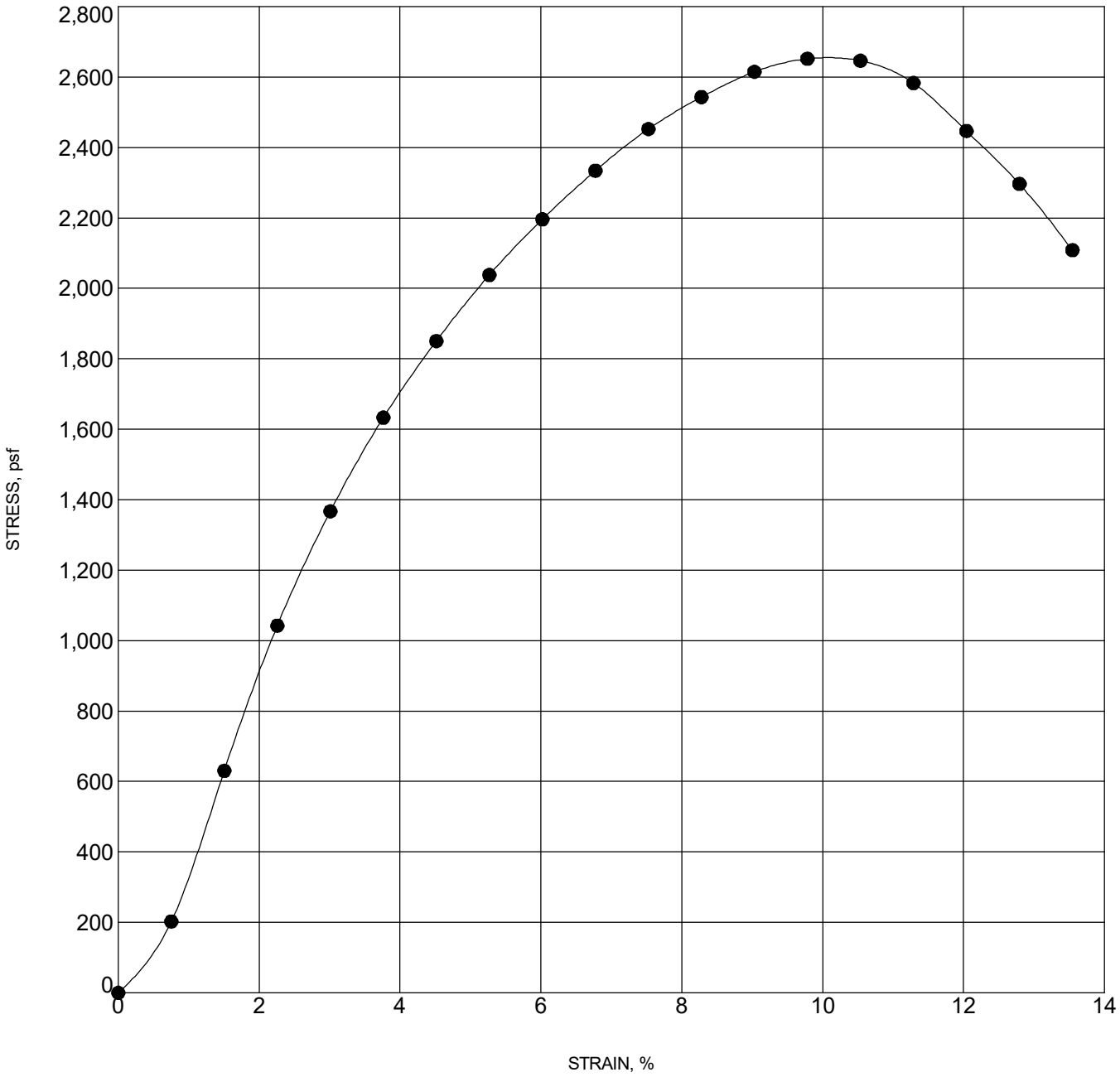

Boring Information		Test Results	
Boring No.	**B-3**	Natural Moisture Content (%)	**21.1**
Sample	**SS-5**	Natural Wet Density, pcf	**129.2**
Depth	**13.5 - 15.0**	Natural Dry Density, pcf	**106.8**
Latitude	**37.993133**	Unconfined Compression Strength, psf	**2652**
Longitude	**-87.381402**	Failure Strain (%)	**9.8**
		SOIL DESCRIPTION	**LEAN CLAY (CL)**

CTL Engineering, Inc.
Phone: 317-295-8650

UNCONFINED COMPRESSIVE STRENGTH

Project: 1.5 Million Gallon Water Tank

Location: Chandler, Indiana

Project No.: 24050125IND

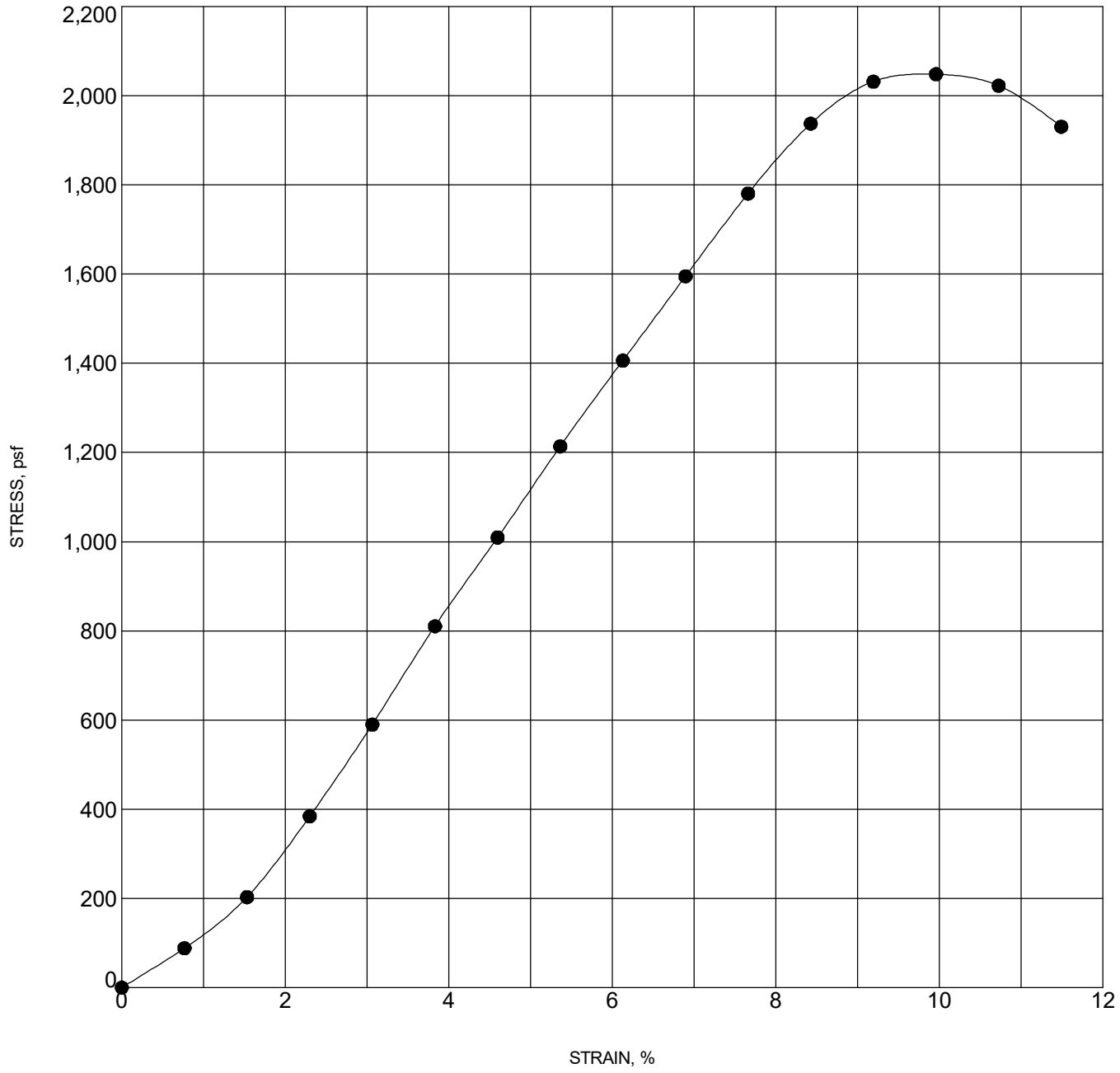

Boring Information		Test Results	
Boring No.	**B-4**	Natural Moisture Content (%)	**23.2**
Sample	**SS-2**	Natural Wet Density, pcf	**128.8**
Depth	**3.5 - 5.0**	Natural Dry Density, pcf	**104.5**
Latitude	**37.993331**	Unconfined Compression Strength, psf	**2048**
Longitude	**-87.381299**	Failure Strain (%)	**10.0**
		SOIL DESCRIPTION	**LEAN CLAY (CL)**

CTL Engineering, Inc.
Phone: 317-295-8650

UNCONFINED COMPRESSIVE STRENGTH

Project: 1.5 Million Gallon Water Tank

Location: Chandler, Indiana

Project No.: 24050125IND

One-Dimensional Consolidation by ASTM D2435 - Method B

Summary Report

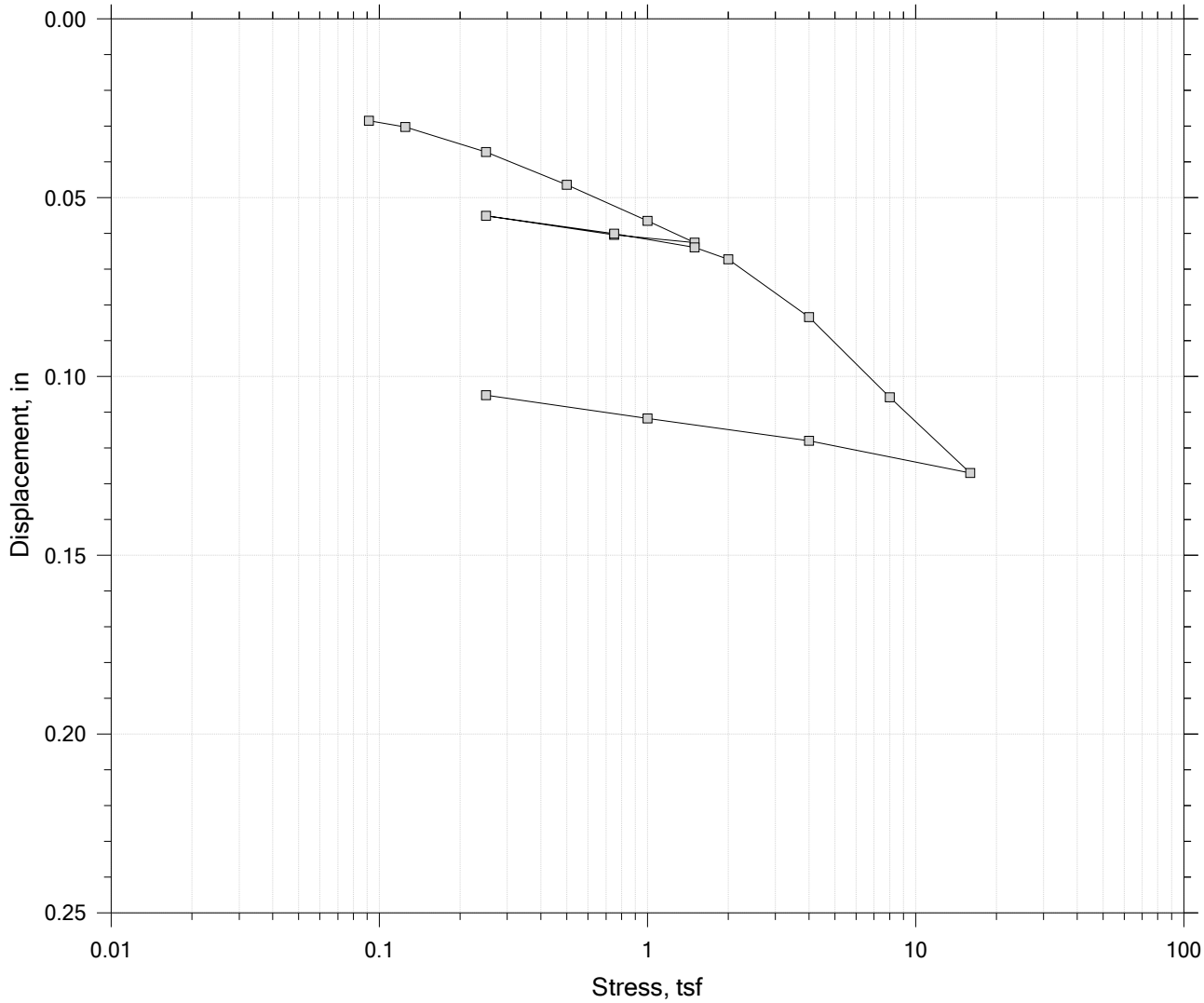

				Before Test	After Test
Current Vertical Effective Stress, tsf: 0.5625				Water Content, %	18.48	16.77
Preconsolidation Stress, tsf: 1.25				Dry Unit Weight, pcf	109.82	118.6
Compression Ratio (Cc): 0.118		Recompression Ratio (Cr): 0.017		Saturation, %	88.54	99.64
Specimen Diameter, in: 2.495		Specimen Height, in: 0.9947		Void Ratio	0.58	0.46
LL: 27	PL: 18	PI: 9	GS: 2.78			

	Project Name: 1.0 Million Gallon Water Tank	Location: Fishers, Indiana	Project Number: 24-125
	Boring Number: B-2A	Tester: DA	Checker: FE
	Sample Number: ST1	Test Date: 1/2/2025	Depth: 8.0'-10.0'
	Test Number: ST-B-2A-2	Preparation:	Elevation:
	Description:		
	Remarks:		
	Displacement at End of Primary		

One-Dimensional Consolidation by ASTM D2435 - Method B

Specimen Diameter, in: 2.49	Specific Gravity: 2.78 (Estimated)	Liquid Limit: 27
Specimen Height, in: 0.99	Initial Void Ratio: 0.58	Plastic Limit: 18
Final Height, in: 0.92	Final Void Ratio: 0.463	Plasticity Index: 9

	Before Test Trimmings	Before Test Specimen	After Test Specimen	After Test Trimmings
Container ID	Z7	---		Z-11
Mass Container, gm	32.7	108.4	108.4	32.7
Mass Container + Wet Soil, gm	105.7	274.5	272.1	195
Mass Container + Dry Soil, gm	93.06	248.59	248.59	171.69
Mass Dry Soil, gm	60.36	140.19	140.19	138.99
Water Content, %	20.94	18.48	16.77	16.77
Void Ratio	---	0.58	0.46	---
Degree of Saturation, %	---	88.54	100.64	---
Dry Unit Weight, pcf	---	109.82	118.6	---

	Project Name: 1.0 Million Gallon Water Tank	Location: Fishers, Indiana	Project Number: 24-125
	Boring Number: B-2A	Tester: DA	Checker: FE
	Sample Number: ST1	Test Date: 1/2/2025	Depth: 8.0'-10.0'
	Test Number: ST-B-2A-2	Preparation:	Elevation:
	Description:		
	Remarks:		

One-Dimensional Consolidation by ASTM D2435 - Method B

Log of Time Coefficients

Step	Applied Stress tsf	Final Displacement in	Void Ratio	Strain at End %	Log T50 min	Cv in²/s	Mv in²/lb	k in/s	Ca %
1	0.0914	0.02844	0.535	2.86	0.000	0.00e+00	2.25e+04	0.00e+00	0.00e+00
2	0.125	0.03024	0.532	3.04	0.000	0.00e+00	3.89e+03	0.00e+00	0.00e+00
3	0.250	0.03721	0.521	3.74	0.000	0.00e+00	4.03e+03	0.00e+00	0.00e+00
4	0.500	0.04636	0.507	4.66	0.000	0.00e+00	2.65e+03	0.00e+00	0.00e+00
5	1.00	0.05645	0.491	5.68	0.000	0.00e+00	1.46e+03	0.00e+00	0.00e+00
6	1.50	0.06256	0.481	6.29	0.000	0.00e+00	8.85e+02	0.00e+00	0.00e+00
7	0.750	0.06036	0.484	6.07	0.000	0.00e+00	2.12e+02	0.00e+00	0.00e+00
8	0.250	0.05507	0.493	5.54	0.000	0.00e+00	7.66e+02	0.00e+00	0.00e+00
9	0.750	0.06003	0.485	6.04	0.000	0.00e+00	7.18e+02	0.00e+00	0.00e+00
10	1.50	0.06393	0.479	6.43	0.000	0.00e+00	3.76e+02	0.00e+00	0.00e+00
11	2.00	0.06720	0.474	6.76	0.000	0.00e+00	4.73e+02	0.00e+00	0.00e+00
12	4.00	0.08339	0.448	8.38	5.847	1.19e-04	5.86e+02	2.51e-09	0.00e+00
13	8.00	0.1058	0.412	10.6	0.000	0.00e+00	4.05e+02	0.00e+00	0.00e+00
14	16.0	0.1270	0.379	12.8	2.020	3.14e-04	1.92e+02	2.17e-09	0.00e+00
15	4.00	0.1180	0.393	11.9	0.000	0.00e+00	5.41e+01	0.00e+00	0.00e+00
16	1.00	0.1118	0.403	11.2	0.000	0.00e+00	1.50e+02	0.00e+00	0.00e+00
17	0.250	0.1053	0.413	10.6	0.000	0.00e+00	6.25e+02	0.00e+00	0.00e+00

	Project Name: 1.0 Million Gallon Water Tank	Location: Fishers, Indiana	Project Number: 24-125
	Boring Number: B-2A	Tester: DA	Checker: FE
	Sample Number: ST1	Test Date: 1/2/2025	Depth: 8.0'-10.0'
	Test Number: ST-B-2A-2	Preparation:	Elevation:
	Description:		
	Remarks:		
	Displacement at End of Primary		

One-Dimensional Consolidation by ASTM D2435 - Method B

Sqrt of Time Coefficients

Step	Applied Stress tsf	Final Displacement in	Void Ratio	Strain at End %	Sq.Rt. T90 min	Cv in²/s	Mv in²/lb	k in/s
1	0.0914	0.02844	0.535	2.86	209.438	1.62e-05	2.25e+04	1.32e-08
2	0.125	0.03024	0.532	3.04	37.953	8.68e-05	3.89e+03	1.22e-08
3	0.250	0.03721	0.521	3.74	36.942	8.83e-05	4.03e+03	1.29e-08
4	0.500	0.04636	0.507	4.66	31.781	1.01e-04	2.65e+03	9.67e-09
5	1.00	0.05645	0.491	5.68	30.715	1.02e-04	1.46e+03	5.40e-09
6	1.50	0.06256	0.481	6.29	74.217	4.16e-05	8.85e+02	1.33e-09
7	0.750	0.06036	0.484	6.07	4.909	6.27e-04	2.12e+02	4.80e-09
8	0.250	0.05507	0.493	5.54	98.346	3.15e-05	7.66e+02	8.73e-10
9	0.750	0.06003	0.485	6.04	6.694	4.64e-04	7.18e+02	1.20e-08
10	1.50	0.06393	0.479	6.43	29.312	1.05e-04	3.76e+02	1.43e-09
11	2.00	0.06720	0.474	6.76	22.567	1.35e-04	4.73e+02	2.31e-09
12	4.00	0.08339	0.448	8.38	16.255	1.84e-04	5.86e+02	3.89e-09
13	8.00	0.1058	0.412	10.6	16.100	1.78e-04	4.05e+02	2.60e-09
14	16.0	0.1270	0.379	12.8	10.995	2.48e-04	1.92e+02	1.72e-09
15	4.00	0.1180	0.393	11.9	3.754	7.16e-04	5.41e+01	1.40e-09
16	1.00	0.1118	0.403	11.2	11.534	2.37e-04	1.50e+02	1.29e-09
17	0.250	0.1053	0.413	10.6	32.326	8.58e-05	6.25e+02	1.94e-09

	Project Name: 1.0 Million Gallon Water Tank	Location: Fishers, Indiana	Project Number: 24-125
	Boring Number: B-2A	Tester: DA	Checker: FE
	Sample Number: ST1	Test Date: 1/2/2025	Depth: 8.0'-10.0'
	Test Number: ST-B-2A-2	Preparation:	Elevation:
	Description:		
	Remarks:		
	Displacement at End of Primary		

UNIAXIAL COMPRESSIVE STRENGTH OF INTACT ROCK SPECIMENS

ASTM D 7012 (Method C) / ASTM D 4543

Client:	Beam, Longest and Neff
Project:	1.5 Million Gallon Water Tank
Location:	Near Fuquay Road and SR 261Intersection, Chandler, Indiana
CTL Project No.:	24050125IND

Boring No.	Core Run No.	Rock Type	Depth (feet)	Core Weight (lb)	Diameter D (inches)	Length L (inches)	L/D Ratio	Area (in^2)	**Unit Weight (pcf)**	Total Load (lbs)	Tested Strength (psi)	**Compressive Strength (psi)**
B-1	RC-1	Limestone	43.3	1.218	2.00	4.15	2.08	3.13	**162.2**	10,231	3,270	**3,260**
B-1	RC-2	Limestone	48.0	1.237	1.91	4.41	2.31	2.87	**169.2**	11,695	4,082	**4,080**

Boring No.	Latitude	Longitude	Sample No.	Depth	Moisture Content (%)	Wet Density (pcf)	Dry Density (pcf)	Unconfined Compression (psf)	Failure Strain (%)	Loss on Ignition (%)	Calcium Carbonate (%)	pH
B-1	37.993217	-87.381302	SS-1	1.0-2.5	20.0							
B-1	37.993217	-87.381302	SS-2	3.5-5.0	23.0							
B-1	37.993217	-87.381302	SS-3	6.0-7.5	19.2							
B-1	37.993217	-87.381302	SS-4	8.5-10.0	20.4	130.8	112.9	3468	13.5			
B-1	37.993217	-87.381302	SS-5	13.5-15.0	19.9							7.1
B-1	37.993217	-87.381302	SS-6	18.5-20.0	21.5							
B-1	37.993217	-87.381302	SS-7	23.5-25.0	13.7							7.5
B-1	37.993217	-87.381302	SS-8	28.5-30.0	13.4							
B-1	37.993217	-87.381302	SS-9	33.5-35.0	11.4					23.8		
B-1	37.993217	-87.381302	SS-10	38.5-40.0	7.1							
B-2	37.993135	-87.381201	SS-1	1.0-2.5	21.3							
B-2	37.993135	-87.381201	SS-3	6.0-7.5	21.7	131.5	108.4	1956	15.0			
B-2	37.993135	-87.381201	SS-4	8.5-10.0	20.6							
B-2	37.993135	-87.381201	SS-5	13.5-15.0	19.4							
B-2	37.993135	-87.381201	SS-6	18.5-20.0	22.0							6.8
B-2	37.993135	-87.381201	SS-7	23.5-24.5	11.5							
B-2A	37.993135	-87.381201	ST-1	6.0-8.0	38.4							8.5
B-3	37.993133	-87.381402	SS-1	1.0-2.5	21.1							
B-3	37.993133	-87.381402	SS-2	3.5-5.0	20.0							
B-3	37.993133	-87.381402	SS-3	6.0-7.5	22.4							
B-3	37.993133	-87.381402	SS-4	8.5-10.0	22.9							
B-3	37.993133	-87.381402	SS-5	13.5-15.0	21.3	129.2	106.8	2652	9.8			
B-3	37.993133	-87.381402	SS-6	18.5-20.0	12.4							
B-3	37.993133	-87.381402	SS-7	23.5-25.0	10.9							
B-4	37.993331	-87.381299	SS-1	1.0-2.5	26.5							
B-4	37.993331	-87.381299	SS-2	3.5-5.0	24.7	128.8	104.5	2048	10.0			
B-4	37.993331	-87.381299	SS-3	6.0-7.5	20.2							
B-4	37.993331	-87.381299	SS-4	8.5-10.0	20.8							
B-4	37.993331	-87.381299	SS-5	13.5-15.0	22.6							
B-4	37.993331	-87.381299	SS-6	18.5-20.0	24.6							
B-4	37.993331	-87.381299	SS-7	23.5-24.2	19.2							

CTL Engineering, Inc.
Phone: 317-295-8650

SUMMARY OF SPECIAL LABORATORY TEST RESULTS

Project: 1.5 Million Gallon Water Tank

Location: Fuquay Road and SR 261, Chandler, Indiana

CTL Project No.: 24050125IND

APPENDIX D

SOIL PROFILE

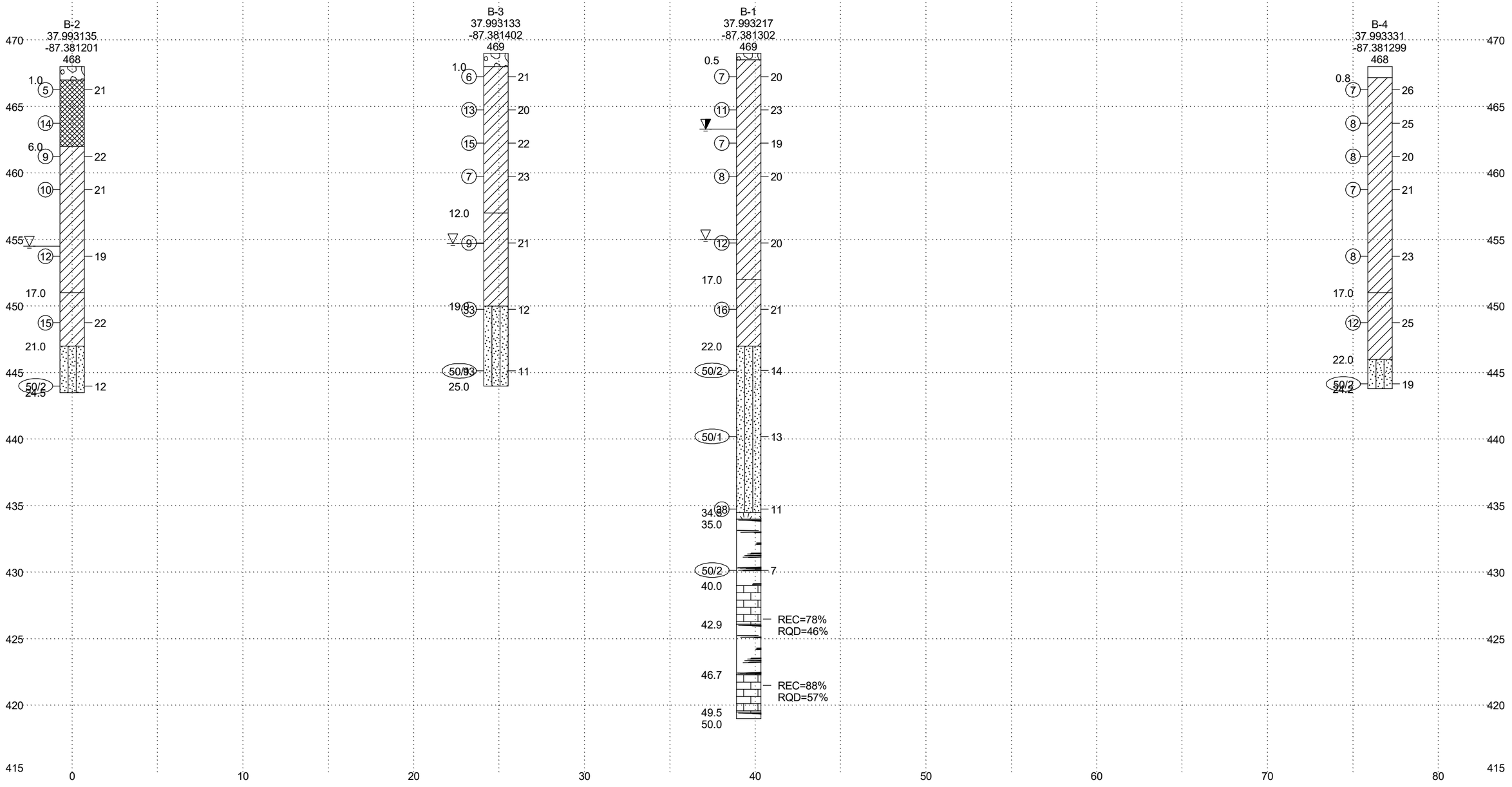

CTL Engineering, Inc.
1310 S. Franklin Rd.
Indianapolis, Indiana 46239
Phone: 317-295-8650
Website: www.ctleng.com

LEGEND

GRAVEL_POORLY GRADED
PEAT
FILL
LEAN CLAY
SHALE
TOPSOIL
SILTY SAND
LIMESTONE

GROUND WATER DURING DRILLING
GROUND WATER AT COMPLETION OF DRILLING
GROUND WATER AT "N" HOURS AFTER COMPLETION
W MOISTURE CONTENT IN PERCENT (w)
N STANDARD PENETRATION IN BLOWS PER FOOT (N)

SOIL PROFILE

Scale: As Shown	Beam, Longest and Neff
Date: 1/28/25	1.5 Million Gallon Water Tank
Drawn By: CG	Fuquay Road and SR 261, Chandler, Indiana
Reviewed By	Project No. 24050125IND / Page 1 of 1

APPENDIX E

SEISMIC COEFFICIENTS
LIQUEFACTION ANALYSES

ASCE Hazards Report

Address:
No Address at This Location

Standard:	ASCE/SEI 7-10	**Latitude:**	37.993217
Risk Category:	IV	**Longitude:**	-87.381302
Soil Class:	C - Very Dense Soil and Soft Rock	**Elevation:**	468.6578515095179 ft (NAVD 88)

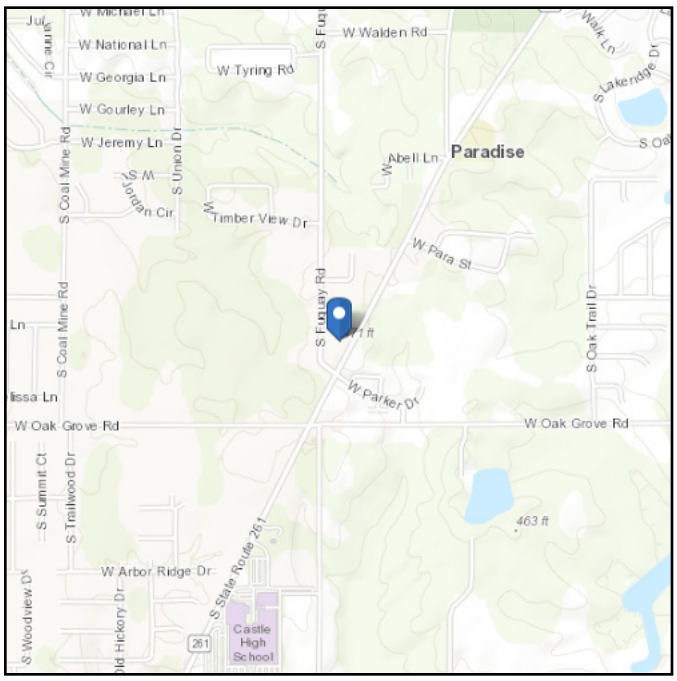

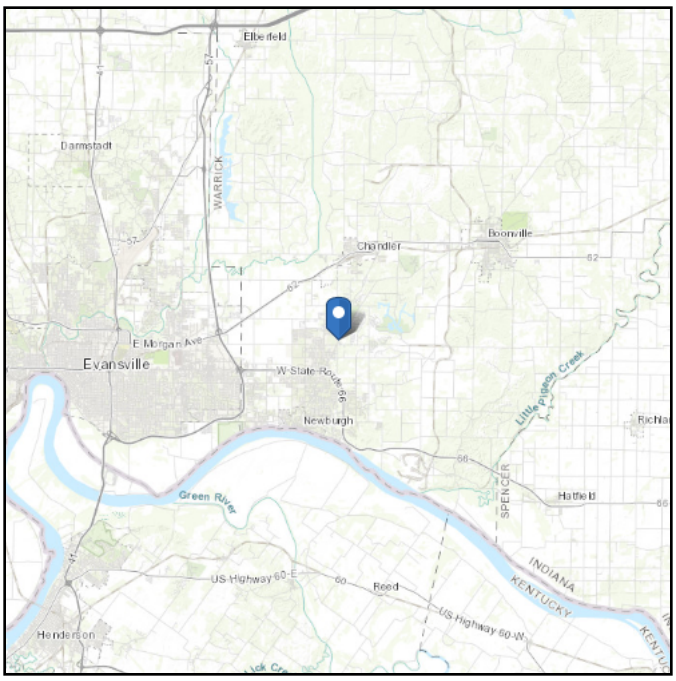

Seismic

Site Soil Class: C - Very Dense Soil and Soft Rock

Results:

S_S :	0.512	S_{D1} :	0.199
S_1 :	0.185	T_L :	12
F_a :	1.195	PGA :	0.275
F_v :	1.615	PGA_M :	0.309
S_{MS} :	0.611	F_{PGA} :	1.125
S_{M1} :	0.299	I_e :	1.5
S_{DS} :	0.408		

Seismic Design Category: D

MCE_R Response Spectrum

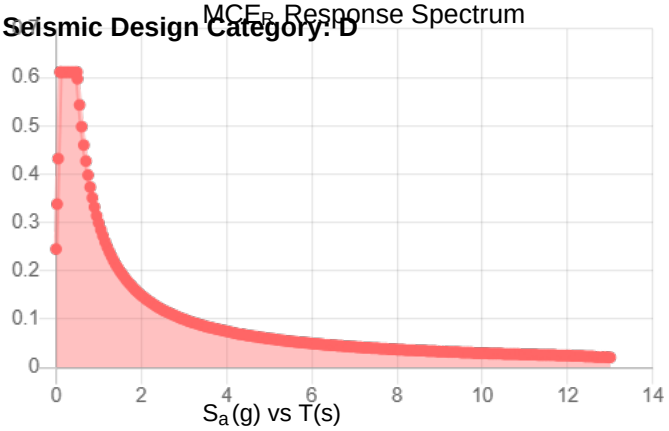

Design Response Spectrum

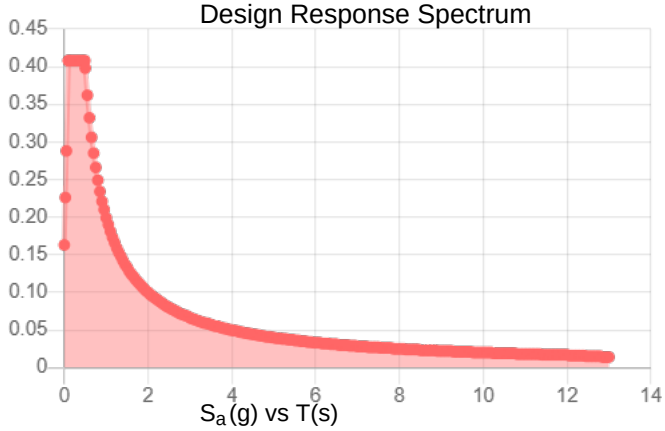

Data Accessed: Sun Dec 29 2024

Date Source:

USGS Seismic Design Maps based on ASCE/SEI 7-10, incorporating Supplement 1 and errata of March 31, 2013, and ASCE/SEI 7-10 Table 1.5-2. Additional data for site-specific ground motion procedures in accordance with ASCE/SEI 7-10 Ch. 21 are available from USGS.

The ASCE Hazard Tool is provided for your convenience, for informational purposes only, and is provided “as is” and without warranties of any kind. The location data included herein has been obtained from information developed, produced, and maintained by third party providers; or has been extrapolated from maps incorporated in the ASCE standard. While ASCE has made every effort to use data obtained from reliable sources or methodologies, ASCE does not make any representations or warranties as to the accuracy, completeness, reliability, currency, or quality of any data provided herein. Any third-party links provided by this Tool should not be construed as an endorsement, affiliation, relationship, or sponsorship of such third-party content by or from ASCE.

ASCE does not intend, nor should anyone interpret, the results provided by this Tool to replace the sound judgment of a competent professional, having knowledge and experience in the appropriate field(s) of practice, nor to substitute for the standard of care required of such professionals in interpreting and applying the contents of this Tool or the ASCE standard.

In using this Tool, you expressly assume all risks associated with your use. Under no circumstances shall ASCE or its officers, directors, employees, members, affiliates, or agents be liable to you or any other person for any direct, indirect, special, incidental, or consequential damages arising from or related to your use of, or reliance on, the Tool or any information obtained therein. To the fullest extent permitted by law, you agree to release and hold harmless ASCE from any and all liability of any nature arising out of or resulting from any use of data provided by the ASCE Hazard Tool.

Liquefaction Susceptibility Assessment using Semi-Empirical Procedures by Idriss & Boulanger, 2004

24050125IND
1.5 Million Gallon Water Tank
Chandler, Indiana

Boring:	B-01
Ground Surface Elevation (ft):	469.0
Depth to Groundwater (ft):	12.0
Boring Location:	Tank

Granular soil within upper 75 ft of Soil Profile:	YES
Groundwater within upper 50 ft of Soil Profile:	YES

Earthquake Magnitude (M_w):	6.5
Peak Ground Acceleration Coefficient/ g:	0.309

Vertical Stress due to Embankment acting onto existing soil (psf)	4250.0

Zone (feet)	Depth (ft)	Soil Type (A-#)	N_f (bpf)	γ_t (pcf)	γ_w (pcf)	% Fines	LL	PI	Wc	σ_v' (kPa)	C_N	$(N_1)_{60}$*	Wc/LL	Potential Liquefaction	Elevation of Bottom of Liquefiable Zone
3	1	6	7	125.0		92	35	19	20	6.0	0.74	7	0.57	NO	466.0
6	3.5	6	11	125.0		92	35	19	23	20.9	0.72	11	0.66	NO	463.0
7.5	6	6	7	130.0		92	35	19	19	36.5	0.69	6	0.54	NO	461.5
12	8.5	6	8	130.0	62.4	92	35	19	20	52.1	0.67	7	0.57	NO	457.0
17	13.5	6	12	130.0	62.4	92	35	19	20	78.7	0.64	10	0.57	NO	452.0
22	18.5	6	16	130.0	62.4	95	35	19	21	94.9	0.62	13	0.60	NO	447.0
27	23.5	4	100	125.0	62.4	30	1	0	14	109.9	0.61	37	14.00	YES	442.0
32	28.5	4	100	125.0	62.4	30	1	0	13	124.9	0.59	37	13.00	YES	437.0
35	33.5	4	38	125.0	62.4	30	1	0	11	139.9	0.57	29	11.00	YES	434.0

* Assumes a Hammer Energy of 80%

Zone (feet)	Depth (ft)	σ_v (psf)	σ_v (kPa)	σ_v' (psf)	σ_v' (kPa)	r_d	MSF	C_σ	k_σ	$(N_1)_{60cs}$	$CSR_{7.5}$	$CRR_{7.5}$	FS	Verification	Volumetric Strain (%)*	Settlement of Layer (in.)
3	1	4375.0	209.5	4375.0	209.5	1.004	1.30	0.082	0.940	12	0.165	0.136	0.822	NA		**0.0**
6	3.5	4687.5	224.4	4687.5	224.4	0.995	1.30	0.094	0.925	16	0.166	0.165	0.993	NA		**0.0**
7.5	6	5012.5	240.0	5012.5	240.0	0.985	1.30	0.081	0.930	12	0.163	0.132	0.810	NA		**0.0**
12	8.5	5337.5	255.6	5337.5	255.6	0.973	1.30	0.083	0.923	13	0.163	0.138	0.846	NA		**0.0**
17	13.5	5987.5	286.7	5893.9	282.2	0.948	1.30	0.093	0.904	16	0.164	0.163	0.989	NA		**0.0**
22	18.5	6637.5	317.8	6231.9	298.4	0.920	1.30	0.104	0.887	19	0.171	0.192	1.124	NA		**0.0**
27	23.5	7262.5	347.7	6544.9	313.4	0.890	1.30	0.295	0.666	42	0.229	9.690	42.309	OK		**0.0**
32	28.5	7887.5	377.7	6857.9	328.4	0.858	1.30	0.295	0.652	42	0.234	9.690	41.452	OK		**0.0**
35	33.5	8512.5	407.6	7170.9	343.3	0.826	1.30	0.195	0.762	34	0.199	0.998	5.026	OK		**0.0**
0																**0.0**

* GEC NO. 3, Figure 62. Solid lines for FS less than 1. Dashed lines for FS greater than 1.

Total Post-Liquefaction Settlement = 0.0

00311

Permits

IDEM Permit

INDIANA DEPARTMENT OF ENVIRONMENTAL MANAGEMENT

100 N. Senate Avenue • Indianapolis, IN 46204
(800) 451-6027 • (317) 232-8603 • Fax (317) 233-6647 • www.idem.IN.gov

Mike Braun
Governor

Clint Woods
Commissioner

PERMIT FOR PUBLIC WATER SUPPLY CONSTRUCTION

Tyler Kinder, Director of Public Services
Chandler Water Works Department
9855 Pollack Avenue
Newburgh, IN 47630

WS-12989	November 21, 2025	Liz Melvin, Section Chief Drinking Water Permits Section Office of Water Quality
Permit Number	Date Issued	

You are hereby notified that the Office of Water Quality has approved the general design of plans and specifications of water works improvements to the Chandler Water Works Department public water system (PWSID# IN5287002). This permit allows for water main and storage construction for the Chandler Water Works Department public water system located in Warrick County, Indiana. This Permit is issued under provisions of Indiana Code (IC) 13-15, IC 13-18-16, 327 Indiana Administrative Code (IAC) 8-3, and 327 IAC 8-4-1.

Pursuant to IC 13-15-5-3 and IC 4-21.5-3-4(d), this Permit is effective on the date issued.

The project consists of installing a one million five hundred thousand (1,500,000) gallon composite elevated water tower called the new Paradise Tank, located near the intersection of Fuquay Road and State Route 261 in Newburgh, Indiana, along with the installation of a prefabricated bulk water loading station with a reduced pressure zone backflow preventer, Model FS-63, manufactured by Portalogic. The project includes demolition of the existing Paradise Tank and the Frame Road Standpipe, the installation of a control valve station at the Plank Road Tank, along with 197 LF of 16" Class 250 ductile iron water main, 32 LF of 10" Class 350 ductile iron water main, 12 LF of 12" ductile iron Class 350 water main, and 81 LF of 3" ASTM D2241 Class 250 (SDR-17) PVC water main, together with all the necessary appurtenances.

This Permit is issued with the following conditions:

1. That the permittee shall notify Liz Melvin, Permits Section Chief, in writing a minimum of ten (10) days, excluding Saturdays, Sundays, and State of Indiana holidays, before exercising a permit issued in accordance with 327 IAC 8-3. The notification may be via email (dwpermits@idem.in.gov) and must include the assigned construction permit number, the location of the construction, a description of the construction, the anticipated duration of the construction, and the phone number of the permittee or permittee's representative who will be present during the construction;

2. That, after the commissioner has granted a construction permit, no changes in the application, plans, or specifications shall be made other than changes involving the replacement of equipment of similar design and capacity. None of these changes shall adversely change the plant's operation, hydraulic design, or waste products, nor shall they adversely change the distribution system's design, operation, or capacity without first submitting in writing to the commissioner a detailed statement of the proposed changes and receiving an amended construction permit from the commissioner. Construction permits shall become void if the construction is not started within one (1) year from the date of issuance of the permit, unless the duration of the permit has been extended by the commissioner after receiving a written request from the permittee prior to the permit's expiration requesting such extension with no other changes to the permit, application, plans, or specifications as approved by the commissioner;

3. That the possession of any permit authorized by 327 IAC 8-3 shall not be construed as authorization for the holder of the permit to violate any law of the State of Indiana or rule;

4. That the facility shall be designed, constructed, installed, and operated in such a manner that it will not violate any of the sanitary or health regulations or requirements existing at the time of application for the permit;

5. That the facility shall conform to the design criteria in the 2012 edition of the "Recommended Standards for Water Works" established by the Great Lakes - Upper Mississippi River Board of State Public Health and Environmental Managers (10 State Standards), the American Water Works Association (AWWA) standards, or shall be based on other such criteria which the applicant shows will produce drinking water of satisfactory quality and normal operating pressure at the peak operating flowrate in accordance with 327 IAC 8-3;

6. That all direct additives to the public water system shall be certified for conformance to ANSI/NSF Standard 60 and that all indirect additives, including lubricants, coatings, and equipment which conveys potable water, shall be certified for conformance to ANSI/NSF Standard 61;

7. That no pipe, plumbing fitting, or other fixture containing more than a weighted average of 0.25% lead nor any solders or flux containing more than a weighted average of 0.2% lead shall be used in the installation or repair of any piping on this project which conveys a potable water supply. Additional information may be obtained at the U.S. Environmental Protection Agency's website at http://water.epa.gov/drink/info/lead/upload/epa815s13001.pdf;

8. That each new and existing storage tank to be placed into service shall be disinfected in accordance with AWWA Standard C652, and that all chlorinated water generated by the disinfection procedures shall be disposed of to a sanitary sewer with the approval of the local sewer authority or to a location other than a sanitary sewer after the water has been dechlorinated in accordance with AWWA Standard C655 Field Dechlorination;

9. That two (2) successive sets of total coliform samples shall be collected in accordance with AWWA Standard C652 at intervals of at least thirty (30) minutes apart from each tank to be placed into service and be tested for coliform bacteria by a certified laboratory. These results shall confirm that the water in the tank is bacteriologically acceptable before the tank can be placed back into service. The laboratory results from all tank sampling performed shall be marked with the construction permit number, WS-12989 and PWSID number, IN5287002, and be submitted to the Drinking Water Branch's Permit Section at dwpermits@idem.in.gov;

10. That the design, materials, welding, shop fabrication, erection, testing, and inspection of the proposed composite elevated water storage tank comply with the version of AWWA D107 for "Composite Elevated Tanks for Water Storage" effective on the date of this permit;

11. That the elevated storage facility be constructed with an overflow elevation of approximately 592.00 feet MSL, a finished grade elevation of 469.00 feet MSL, with a height from finished grade to overflow of approximately 123.00 feet;

12. That the forms of chlorine for disinfection of the proposed facilities be in accordance with AWWA C651, section 4.1, include liquid chlorine conforming to ANSI/AWWA B301, sodium hypochlorite and calcium hypochlorite conforming to ANSI/AWWA B300;

13. That construction of the new water storage facility and control valves shall be performed without interruption of the continuous provision of water of adequate quality and quantity. Operating pressure in the distribution system shall not be less than twenty (20) pounds per square inch (psi) under all conditions of flow at ground level. Normal working pressure in the distribution system shall be at least thirty-five (35) psi at ground level;

14. That butterfly valves meet the minimum requirements of AWWA C504 (Rubber-Seated Butterfly Valves);

15. That demolition of the existing Paradise elevated storage tank and the Frame Road standpipe shall not commence until after the new Paradise elevated storage tank proposed in this project is substantially complete and placed in service;

16. That a smooth nosed sample tap without interior or exterior threads be provided on the inlet/outlet pipe to the proposed Paradise elevated storage tank. The sample tap shall not be of the mixing type and shall not have a screen, aerator, or other such appurtenance;

17. That the configuration, clearances, design, and details of ladders and related safety devices comply with OSHA 29 CFR 1910, pursuant to AWWA C107, Section 8.2. Provide safe climbing devices, cages, or other means of fall protection where fall protection is required;

18. That a minimum 6-inch-high removable silt stop be provided where the inlet/outlet pipe enters the tank, pursuant to AWWA D107, Section 8.7.4(2.);

19. That an upper platform is provided below the tank floor for access from the wall ladder to the access tube interior ladder, tank floor manhole, and exterior rigging rail access opening. The upper platform shall be a minimum 48-inches wide, with a railing and toe board. The railing shall have a top rail, intermediate rail, and a nominal height of 42-inches. The toeboard shall have a nominal vertical height of 4-inches with a maximum clearance above the platform level of ¼-inch, pursuant to AWWA D107, Section 8.3.4.1;

20. That the personnel door in the concrete support structure shall be 36-inch x 84-inch x 1 ¾-inch 18-gauge hollow metal designed for exterior use, pursuant to AWWA D107, Section 8.4.1.1;

21. That access to the exterior rigging rail be provided by a minimum 24-inch opening at the top of the support wall. The opening shall be provided a hinged or removable cover that may be screened and louvered to satisfy all or part of the support structure ventilation requirements, pursuant to AWWA D107, Section 8.4.2;

22. That a support structure vent, constructed of corrosion resistant, durable materials and equipped with louvers and a 24-mesh insect screen, with a minimum free area of 500 square inches be provided near the top of the support structure and accessible from an interior ladder, platform or floor, pursuant to AWWA D107, section 8.6.1. The painter's hatch may satisfy some or all of this requirement;

23. That a roof vent and a pressure-vacuum relief mechanism, or a combined unit, with sufficient capacity to prevent excessive differential pressure between the atmosphere and tank interior at maximum flow rates be installed and maintained, pursuant to AWWA D107, Section 8.6;

24. That a watertight manhole be provided in the tank floor that is accessible from the upper platform and has a minimum opening of 30-inches, pursuant to AWWA D107, Section 8.4.5; and

25. That entrance safety protection is provided for the 16-inch inlet/outlet pipe, pursuant to AWWA D107, section 8.7.4(2).

Plans and specifications entitled Chandler 1.5 MG Paradise Water Tower certified by Brian A. Bullock, P.E., were submitted by Egis BLN USA, Inc. on September 5, 2025, along with subsequent submissions received on November 3, 2025, November 10, 2023, and November 14, 2025, with a public notice date of September 19, 2025.

This Permit shall become void if construction is not started by December 2026. Any fundamental change in plans or specifications which may affect drinking water quality, operations, or public health must be submitted for review and approval by this agency.

This Permit may be modified, suspended, or revoked for cause including, but not limited to the following:

1. Violation of any term or condition of this Permit; or,

2. Obtaining this Permit by misrepresentation or failure to fully disclose all relevant facts.

Nothing herein shall be construed as guaranteeing that the proposed public water supply facility shall meet standards, limitations or requirements of this or any other agency of state or federal government, as this agency has no direct control over the actual construction and operation of the proposed project.

If you wish to challenge this permit, you must file a Petition for Administrative Review with the Indiana Office of Administrative Law Proceedings (OALP) and serve a copy of the petition upon IDEM. The requirements for filing a Petition for Administrative Review are found in IC 4-21.5-3-7, IC 13-15-6-1 and 315 IAC 1-3-2. A summary of the requirements of these laws is provided below.

A Petition for Administrative Review must be filed with the Indiana Office of Administrative Law Proceedings within fifteen (15) days of the issuance of this notice (eighteen (18) days if you received this notice by U.S. Mail), and a copy must be served upon IDEM.

Addresses are:

Director
Indiana Office of Administrative Law Proceedings
Indiana Government Center North
Suite N802
100 North Senate Avenue
Indianapolis, Indiana 46204

Commissioner
Indiana Department of Environmental Management
Indiana Government Center North
Room 1301
100 North Senate Avenue
Indianapolis, Indiana 46204

The petition must contain the following information:

1. The name, address, and telephone number of each petitioner.
2. A description of each petitioner's interest in the permit.
3. A statement of facts demonstrating that each petitioner is:
    a. a person to whom the order is directed;
    b. aggrieved or adversely affected by the permit; or
    c. entitled to administrative review under any law.
4. The reasons for the request for administrative review.
5. The particular legal issues proposed for review.
6. The alleged environmental concerns or technical deficiencies of the permit.
7. The permit terms and conditions that the petitioner believes would be appropriate and would comply with the law.
8. The identity of any person(s) represented by the petitioner.
9. The identity of the person against whom administrative review is sought.
10. A copy of the permit that is the basis of the petition.
11. A statement identifying petitioner's attorney or other representative, if any.

Failure to meet the requirements of the law with respect to a Petition for Administrative Review may result in a waiver of your right to seek administrative review of the permit. Examples are:

1. Failure to file a Petition by the applicable deadline;
2. Failure to serve a copy of the Petition upon IDEM when it is filed; or
3. Failure to include the information required by law.

If you seek to have a permit stayed during the administrative review, you may need to file a Petition for a Stay of Effectiveness. The specific requirements for such a Petition can be found in 315 IAC 1-3-2 and 315 IAC 1-3-2.1.

Pursuant to IC 4-21.5-3-17, OALP will provide all parties with notice of any pre-hearing conferences, preliminary hearings, hearings, stays, or orders disposing of the review of this action. If you are entitled to notice under IC 4-21.5-3-5(b) and would like to obtain notices of any pre-hearing conferences, preliminary hearings, hearings, stays, or orders disposing of the review of this action without intervening in the proceeding you must submit a written request to OALP at the address above.

If you have questions regarding your Petition for Administrative Review by the Indiana Office of Administrative Law Proceedings, please refer to the OALP's website at https://www.in.gov/oalp/.

In order to assist the permit staff in tracking appeals, we request that you submit a copy of your petition to Liz Melvin, Permits Section Chief, OWQ Drinking Water Branch – Mail Code 66-34, 100 N. Senate Ave, Indianapolis, Indiana 46204-2251.

If you do not object to this Permit, you do not need to take any further action. If you have any questions regarding this matter, please contact David Matousek, Permit Review Engineer, Office of Water Quality, at (317) 234-1802.

cc: Warrick County Health Department (electronic copy)
Brian A. Bullock, P.E. (electronic copy)
David Matousek, IDEM (electronic copy)
Anna Readle, IDEM (electronic copy)
Lucio Ternieden, IDEM (electronic copy)
Liz Melvin, IDEM (electronic copy)
Stacy Jones, IDEM (electronic copy)
Kelly Jones, IDEM (electronic copy)
Camille Meiners, IDEM (electronic copy)
Abbi Kuhn, IDEM (electronic copy)
Angie Wickiser, IDEM (electronic copy)

FAA Permit (7460-1)

(to be included upon receipt of permit approval)

INDOT ROW Permit

(to be included upon receipt of permit approval)

Warrick County ROW Permit

APPLICATION TO WORK IN COUNTY ROAD RIGHT OF WAY
PERMIT NO. 2025-188

Warrick County Commissioners
Phone No. 812-897-6120,

P.O. Box 749, Boonville, IN 47601
Fax No. 812-897-6189

- [x] Underground construction, grading, trenching or excavation parallel to the road
- [ ] Bores or pushes under the roadway
- [ ] Placement/removal of poles/overhead lines
- [ ] Tap pit
- [x] Open Cut across a County Road Right-of-Way

NOTE: ROAD CLOSURE LIMITED TO MAXIMUM OF 5 DAYS (MON-FRI.). PERMISSION FOR MORE DAYS MUST BE APPROVED BY COUNTY ENGR. POST SIGNAGE MIN. OF 7 DAYS BEFORE CLOSING TO NOTIFY PUBLIC OF CLOSURE.

Bond Company: N/A Bond Amount: $ N/A Bond # N/A

Applicants Name: Egis BLN USA, Inc,

Mailing Address: 8320 Craig Street P.O. Box No.

City: Indianapolis State IN Zip Code: 46250 Phone No. (317) 849-5832

Fax No. N/A Contact Person: Brian Bullock

Project Owners Name (If different from applicant) Town of Chandler Utilities Phone No. (812) 925-6882

Project Owners Address (If different from applicant) 401 E. Lincoln Avenue

City: Chandler State IN Zip Code: 47610 Phone No. (812) 925-6882

Fax No. N/A

Project Location (Must be described in reference to centerlines of streets in feet) The project is located along portions of Warrick County ROW along Fuquay Road. The exact descriptions have been detailed in the cover letter along with the address of the tower location for reference.

Project Purpose The purpose of this project is to install a new 1.5 million-gallon water tower on the site which will have a new connection to an existing water main on Fuquay Road.

I hereby certify that I have the authority to bind the above-named applicant and the owner of the facilities being installed under this permit to the terms, conditions and requirements of this permit. I certify that the applicant and all persons performing the work authorized by this permit understand all requirements of the Ordinance adopted by the Board of Commissioners and will abide by all of the requirements and conditions. I further certify that the applicant and any persons performing work authorized by this permit will not make any changes in work from the approved plan and permit without receiving written permission from the Warrick County Board of Commissioners. The applicant acknowledges and agrees that, in the event of this permit's approval by Warrick County, such approval does not serve as a certification, warrant, or implication of Warrick County that the public right-of-way exists in any of the locations shown or depicted on the drawings submitted by the applicant. The applicant assumes all risk of determining the existence and location of the public rights-of-way and easements over, across, and adjacent to any private property. The applicant agrees to pay all attorney's fees, court costs and other damages or costs incurred by Warrick County in enforcing the Ordinance or which are a result of litigation incurred by the County as a result of this permit. The applicant and the owner of the facilities being installed under this permit understand that in the event Warrick County determines that any of the facilities installed under this permit need to be repaired, relocated or removed from the right-of-way, that the owner or any subsequent owner of the facilities agrees to maintain, relocate or remove these facilities in a timely manner at no cost to Warrick County or its successors. The applicant agrees that the commencement of work covered by this permit will serve as its acceptance of all terms, conditions and requirements of the approved permit.

B. A. Bullock Date: 11/12/2025
Signature

Brian Bullock, P.E. Senior Water Resources Engineer
Printed Name Title

Application to Work in County Road Rights-of-Way Permit No. 2025-188

APPROVAL OF APPLICATION TO WORK IN COUNTY ROAD RIGHTS OF WAYS

DO NOT WRITE IN THIS SECTION-FOR DEPARTMENT USE ONLY:

ASST. County Highway Engineer _____ Date: 11-18-2025

This Permit is Approved:

- ☐ As submitted.
- ☒ Subject to the attached conditions.
- ☐ Subject to the changes noted on the plans.

NOTE: WHEN PLOWING OF UTILITY IS NOT FEASIBLE, BORING SHALL BE PERFORMED. BE AWARE OF UTILITY CONFLICTS

COMMENTS: AS PER ATTACHED SPECIFICATIONS • FOLLOW DIMENSIONS CITED ON PLANS.

COMMISSIONERS MEETING DATE OF APPROVAL: N/A

N/A
Commissioner Signature

N/A
Commissioner Signature

N/A
Commissioner Signature

NOTE: PLACE UTILITY WITHIN & BESIDE OUTER LIMITS OF RIGHT-OF-WAY, & BACKSIDE OF DRAINAGE IMPROVEMENTS/DITCH. DO NOT PLACE UTILITY IN DITCH OR BETWEEN DITCH & EDGE OF PAVEMENT.

NOTE: The approval of this permit does not warrant or imply that Warrick County is certifying that public right-of-way exists in any of the locations shown on the drawings submitted by the Applicant. The Applicant assumes the risk of determining the existence and location of public rights-of-way and easements over, across and adjacent to private property.

Comments:

NOTE: MINIMUM OF 36-INCHES OF COVER AT ALL TIMES, & BENEATH DRAINAGE STRUCTURES.

1. Approved as trench/bore ONLY. (No Pavement Cut)
2. Bore pits to be 5'+ from edge of pavement (EOP), work at 3' or less from E.O. P. falls under guidelines with in attached specifications.
3. Applicant responsible for all applicable signage/traffic control. One lane of traffic to remain open at all times.
4. Repair all disturbed areas or structures to pre-existing conditions.
5. When working 3ft or less from the roadway flowable backfill is required.
6. Maintain stability of work/cut for six months
7. Warrick County Road Right of Way Permit excludes work in Rail Road Right of Way
8. Notify the proper Departments for the road closure such as Dispatch and the School Corporation. See attached Specifications for additional information.

NOTE: SEE WORK IN R.O.W. REQUIREMENTS. FLOWABLE FILL REQUIRED TO ROAD CUT. ADDITIONAL ASPHALT PAVING BEYOND CUT MAY BE REQUIRED.

Application to Work in County Road Rights-of-Way **Permit No.** Z025-188

1. Application Fee
   $250 — $250

2. $3.00 Convenience Fee — $3

3. Road Excavation/Cuts:
   Gravel: $10.00 per linear foot, except farm subsurface drain.
   Minimum: $200
   Hard Surface: $25.00 per linear foot
   Minimum: $500 — Linear Feet 50 — Total $ 1250

4. Plowing in Cable or Pipe:
   $1.00 per linear foot.
   Minimum: $100 — Linear Feet _____ — Total $ N/A

5. Directional Boring:
   $1.00 per linear foot
   Minimum: $100 — Linear Feet _____ — Total $ N/A

6. Trenching/Excavating (adjacent to Roadway):
   $1.00 per linear foot
   Minimum: $100 — Linear Feet 30 — Total $ 100

7. Boring or Pushing Under Roadway:
   $150 per Bore/Push — Bore/Push Total _____ — Total $ N/A

8. Pole Lines:
   $1000 per mile
   Minimum: $75 per pole — Total Miles _____ — Total $ N/A

9. Setting individual above and below ground structures (other than poles) including pedestals, splicer box, junction box, and transformers:
   $200 per structure — Total Structures _____ — Total $ N/A

10. Roadway/Lane restrictions and closures
    $250/day — Total Days _____ — Total $ N/A

Grand Total $: 1603 ✓

Confirmation Number: 15270851

Indiana

Warrick County

Highway Department

Transaction Details

Name

Carl Frey

Warrick County Highway

Right of Way Permits

Credit Card Payment Address Information

Order Number	15270851
Customer Name	Carl Frey
Email Address	carl.frey@egis-group.com
Phone Number	(317) 558-7516
Address	8320 Craig Street Indianapolis, IN 46250
Credit Card Number	552XXXXXXXXX1739
Credit Card Type	MasterCard
Expiration Date	0327
Operator Name	
Transaction Time	11/13/2025 11:15:00 AM
Authorization Code	04886Q
Transaction ID	080f7b55e1813638989cede10a924d17
Agency Total	1603.00
Convenience Fee	$48.09
Total Amount Charged to Card	1651.09
comment	

For questions about this payment, please call (866) 480-8552.

Disputing a charge with your credit card company may result in an additional $40.00 charge.

egis

IMAGINE. CREATE. ACHIEVE.
a sustainable future

November 12th, 2025

Warrick County Highway Engineer
107 W. Locust St., Rm. 208
Booneville, IN 47601

Re: Chandler 1.5 Million-Gallon Paradise Water Tower
Warrick County ROW Application

Dear Warrick County Highway Engineer:

We respectfully submit our Warrick County ROW Permit Application for the above referenced project. In accordance with Warrick County Highway Engineer ROW Permit Instructions, enclosed you will find the following items:

1. Cover Letter (this document)
2. Application to Work in County Road Right of Way, signed and filled out as directed.
3. Detailed plan set dated 11/10/25 for this project.
4. Permit Fee: N/A
5. Other Work: N/A

The overall project includes a new 1.5 million-gallon water tower on a site located at 2855 IN-261/2854 Fuquay Road. The project will include a tie-in to the existing water main along the west edge of pavement of Fuquay Road, which will require a pavement cut. In addition, the concrete driveway apron along Fuquay Road entering the site will be replaced after completion of the tower construction. Warrick Co. ROW will be worked within at those locations notated by the following:

A. Pavement cut for water main tie-in with new piping to the east, ~400' northwest of the centerline of IN-261 at the intersection with Fuquay Road.

B. Fuquay Road driveway entrance repair/replacement, ~390' northwest of the centerline of IN-261 at the intersection with Fuquay Road.

The tie-in, valving, and water line will be installed via open cut at location **A**. For this work to be completed, Fuquay Road will have to be closed to through traffic from IN-261 to Walden Road with an off site detour for a minimum of 2 days at a date to be picked later. Please see the planset for a proposed maintenance of traffic plan with details.

Location **B** will require open cut work along/within the edge of ROW to replace the driveway entrance. No road closures are expected for this work.

This tower construction project is currently slated to begin in Late Summer 2026 and conclude in Spring/Summer 2028, and the work within the right-of-way will occur at an unspecified time within that range. If you have any questions or need any information from us, please call me at (317) 803-6230 or email me at brian.bullock@egis-group.com.

Respectfully,

Egis BLN USA, Inc.

B. A. Bullock

Brian Bullock, P.E.
Senior Water Resources Engineer

Encl.: As Noted Above
Cc: Tyler Kinder, Chandler Director of Public Services
Carl Frey, Egis BLN USA, Inc.

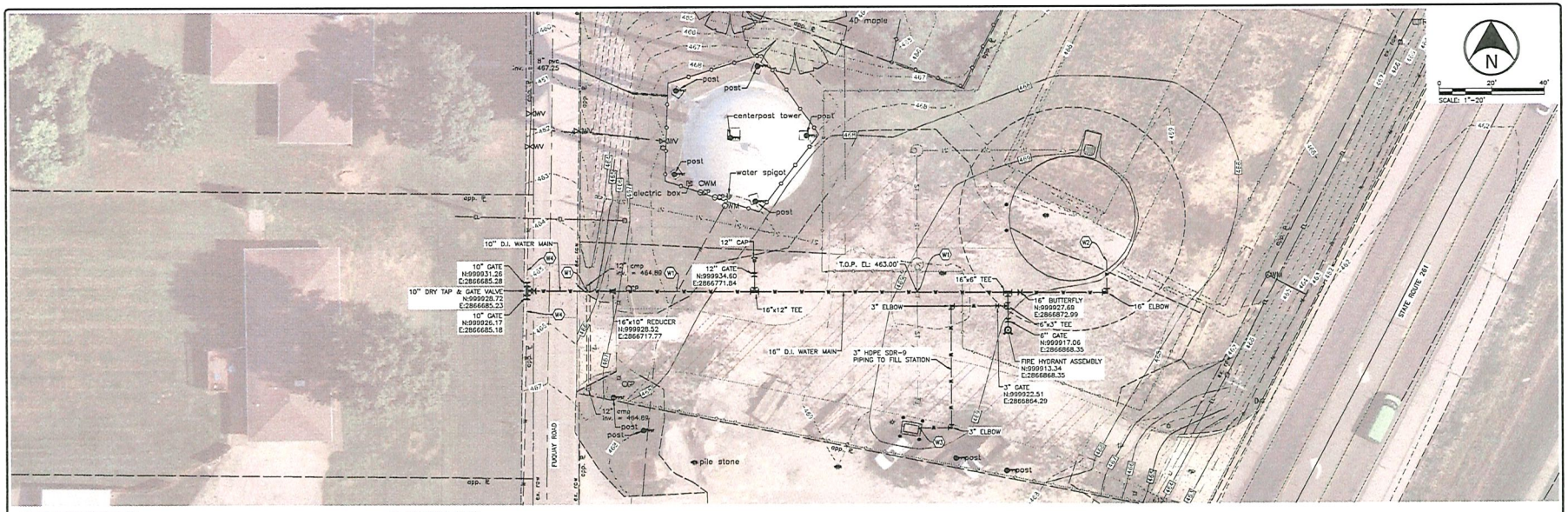

WATER NOTES

1. "T.O.P. EL" REFERS TO TOP OF PIPE ELEVATION OF WATER MAIN AT EACH SEWER CROSSING. ELEVATIONS INDICATE THE MINIMUM DEPTH AT WHICH 18" OF SEPARATION WILL BE MAINTAINED.
2. ALL WATER MAIN SHALL BE DUCTILE IRON PIPE (AWWA C150/C151) UNLESS OTHERWISE NOTED.
3. GRANULAR BACKFILL IS REQUIRED FOR ALL OPEN CUT WATER MAINS AND SERVICES UNDER OR WITHIN 5 FT OF ANY PAVED SURFACES.

KEY NOTES

(W1) UTILITY CROSSING. MAINTAIN REQUIRED SEPARATIONS.

(W2) CONNECT 26" PIPING TO WATER TOWER CONTROL ROOM. REFER TO DETAIL SHEET C103 FOR MORE INFORMATION.

(W3) CONNECT 3" PIPING TO FILL STATION. SEE DETAIL SHEET C505 FOR MORE INFORMATION.

(W4) INSTALL HYDRO-STOP. CONSULT SPECIFICATIONS FOR ALLOWABLE TIMES OF ISOLATION AND NOTIFY THE **TOWN OF CHANDLER** BEFORE ISOLATION BEGINS.

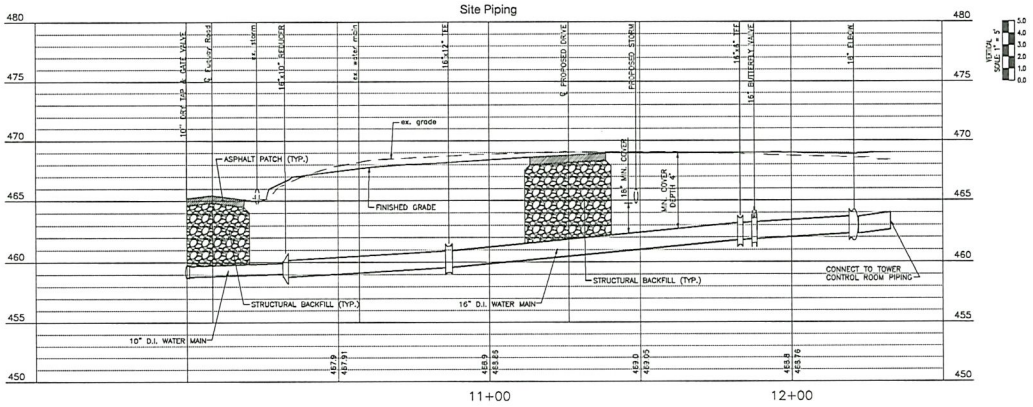

egis

BY	DATE	REVISIONS AND ISSUES

BRIAN A. BULLOCK
REGISTERED
No. 03023668
STATE OF INDIANA
PROFESSIONAL ENGINEER

CONSTRUCTION PLANS FOR:
CHANDLER 1.5 MILLION GALLON WATER TOWER
CHANDLER, WARRICK COUNTY, IN
SEC. 14, TWP. 6S, RNG. 6W
TOWN OF CHANDLER UTILITIES
401 E. LINCOLN AVENUE, CHANDLER, IN 47610

SITE WATER MAIN

PLAN DATE: 11/10/2025

DESIGN:	CHECK:	DRAWN:
CPEF	BAB	CPEF

PROJECT NO. 240050

SHEET NO. **C104**

P:\24050-Chandler Water Tower Design-Gallon Tank-DWRD\4 - Drawings\240503 FIRE PIPING & Plu.dwg Monday, November 10, 2025 10:44:29 AM

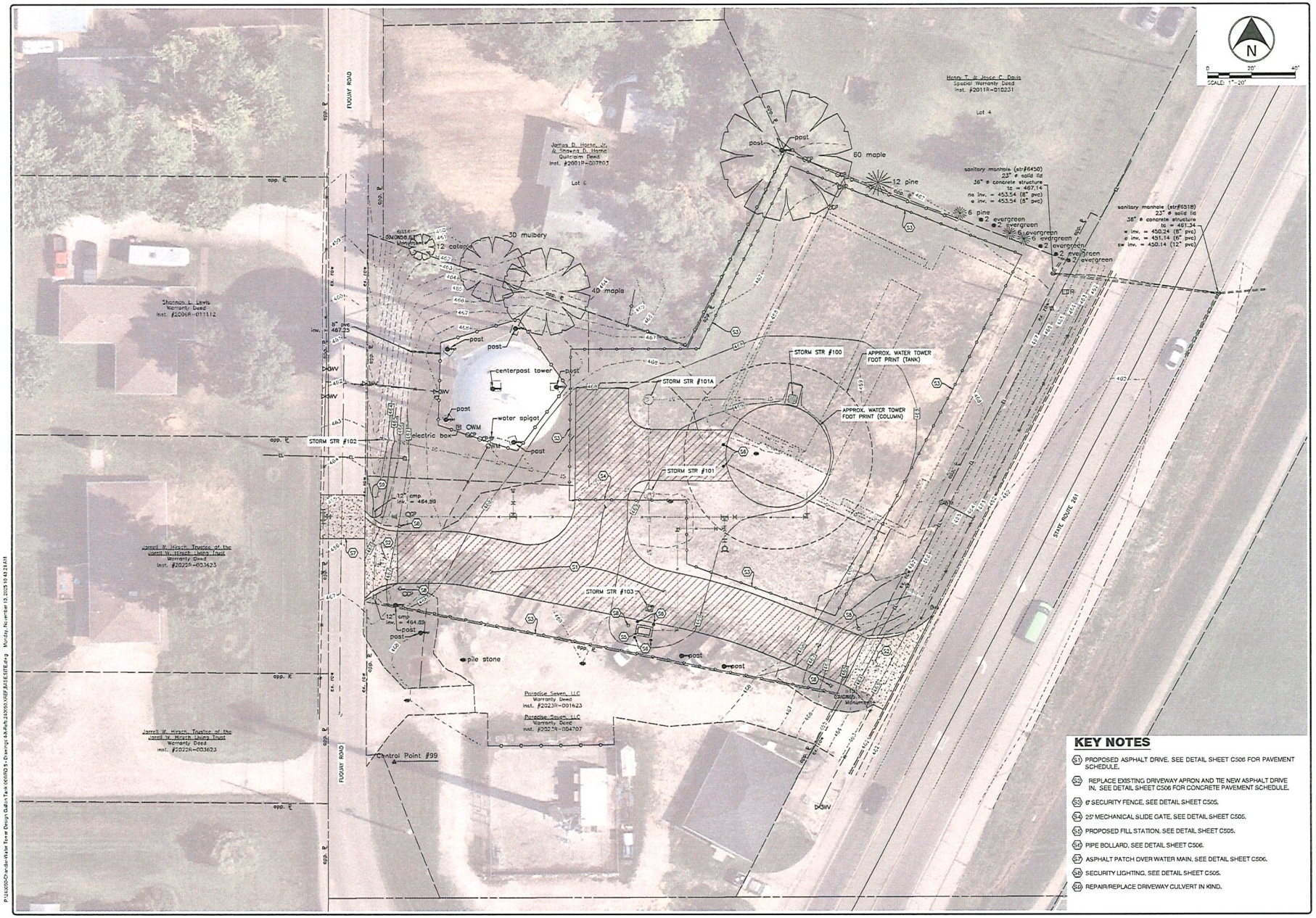

KEY NOTES

- S1 PROPOSED ASPHALT DRIVE. SEE DETAIL SHEET C506 FOR PAVEMENT SCHEDULE.
- S2 REPLACE EXISTING DRIVEWAY APRON AND TIE NEW ASPHALT DRIVE IN. SEE DETAIL SHEET C506 FOR CONCRETE PAVEMENT SCHEDULE.
- S3 6' SECURITY FENCE, SEE DETAIL SHEET C505.
- S4 25' MECHANICAL SLIDE GATE, SEE DETAIL SHEET C505.
- S5 PROPOSED FILL STATION, SEE DETAIL SHEET C505.
- S6 PIPE BOLLARD, SEE DETAIL SHEET C506.
- S7 ASPHALT PATCH OVER WATER MAIN, SEE DETAIL SHEET C506.
- S8 SECURITY LIGHTING, SEE DETAIL SHEET C505.
- S9 REPAIR/REPLACE DRIVEWAY CULVERT IN KIND.

egis

REVISIONS AND ISSUES	DATE	BY

BRIAN A. BULLOCK
REGISTERED
No. 10302366
STATE OF INDIANA
PROFESSIONAL ENGINEER

B. A. Bullock
11/10/25

CONSTRUCTION PLANS FOR:
CHANDLER 1.5 MILLION GALLON WATER TOWER
CHANDLER, WARRICK COUNTY, IN SEC. 14, TWP. 6S, RNG. 9W
TOWN OF CHANDLER UTILITIES
401 E. LINCOLN AVENUE, CHANDLER, IN 47610

TANK SITE PLAN

PLAN DATE: 11/10/2025

DESIGN:	CHECK:	DRAWN:
CPEF	BAB	CPEF

PROJECT NO. 240050

SHEET NO. **C100**

P:\240050-Chandler-Water Tower Design Gallon Tank 00\WRD 5 - Drawings & Refs\240050\REF\BASE\SITE.dwg Monday, November 10, 2025 10:42:21 AM



N

0 200' 400'
SCALE: 1"=200'

M.O.T. NOTES

1. SEE DETAIL MOT-05 ON C507 FOR MORE INFORMATION ON LOCAL DETOUR SIGN PLACEMENT.
2. SEE DETAIL SHEETS C507 & C508 FOR MORE INFORMATION ON ADDITIONAL MAINTENANCE OF TRAFFIC PLAN REQUIREMENTS.
3. FOR FULL INSTRUCTIONS, VISIT THE **IMUTCD** MANUAL.

egis

REVISIONS AND ISSUES	DATE	BY

BRIAN A. BULLOCK
REGISTERED
No. 10302366
STATE OF INDIANA
PROFESSIONAL ENGINEER

1/10/2025

CONSTRUCTION PLANS FOR:
CHANDLER 1.5 MILLION GALLON WATER TOWER
CHANDLER, WARRICK COUNTY, IN SEC. 14, TWP. 6S, RNG. 9W
TOWN OF CHANDLER UTILITIES
401 E. LINCOLN AVENUE, CHANDLER, IN 47610
MAINETNANCE OF TRAFFIC PLAN

PLAN DATE: 11/10/2025

DESIGN:	CHECK:	DRAWN:
CPEF	BAB	CPEF

PROJECT NO. 240050

SHEET NO. **C400**

P:\240050-Chandler-Water Tower Design Gallon Tank 06\WRD 5 - Drawings 240050.MOT PLAN.dwg Monday, November 10, 2025 10:52:39 AM

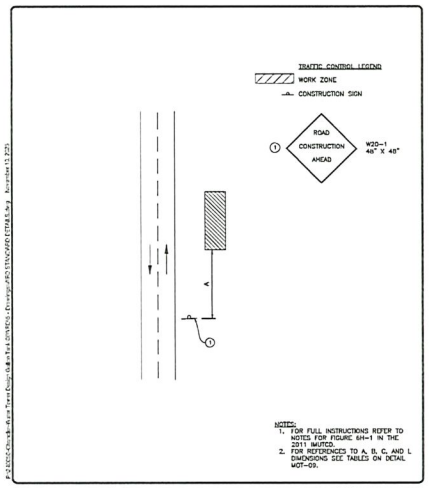

egis | WORK BEYOND THE SHOULDER | EXHIBIT: MOT-01 | SCALE: NTS | DATE: 11/2024

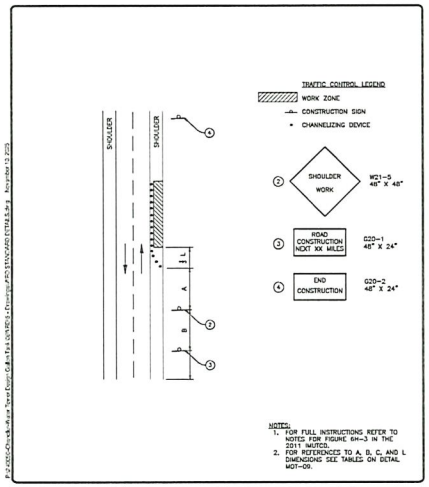

egis | WORK ON THE SHOULDER | EXHIBIT: MOT-02 | SCALE: NTS | DATE: 11/2024

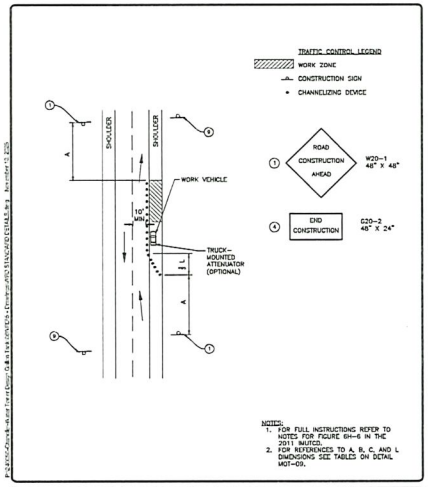

egis | SHOULDER WORK WITH MINOR ENCROACHMENT | EXHIBIT: MOT-03 | SCALE: NTS | DATE: 11/2024

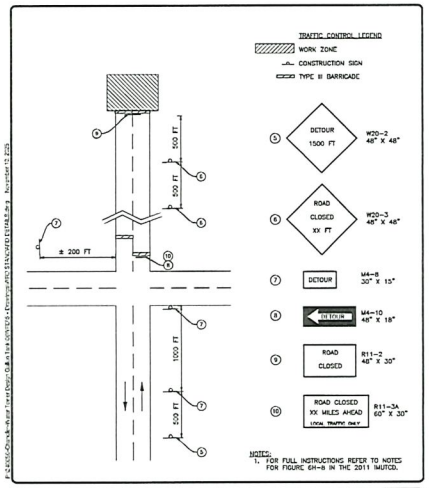

egis | ROAD CLOSURE WITH AN OFF-SITE DETOUR | EXHIBIT: MOT-04 | SCALE: NTS | DATE: 11/2024

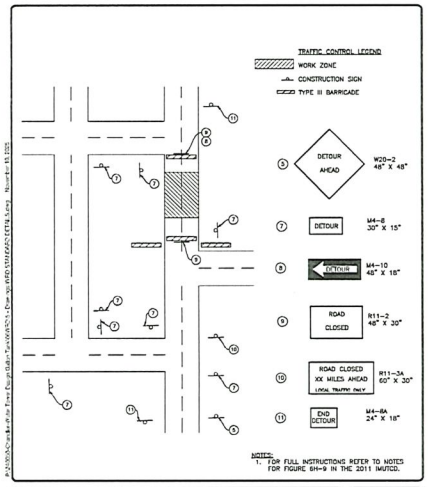

egis | OVERLAPPING ROUTES WITH A DETOUR | EXHIBIT: MOT-05 | SCALE: NTS | DATE: 11/2024

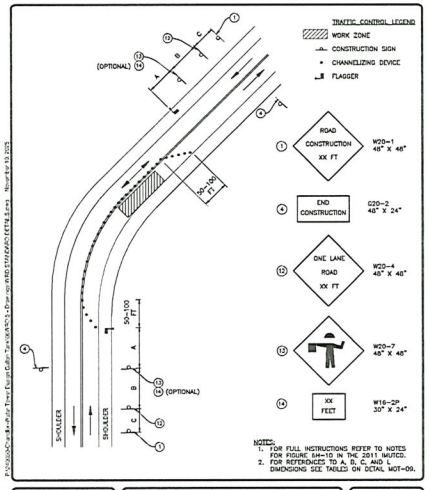

egis | LANE CLOSURE ON A TWO-LANE ROAD USING FLAGGERS | EXHIBIT: MOT-06 | SCALE: NTS | DATE: 11/2024

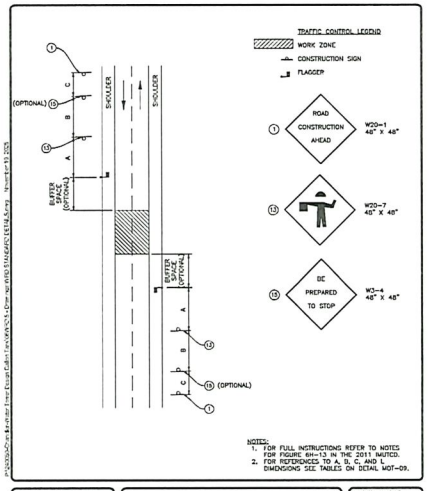

egis | TEMPORARY ROAD CLOSURE | EXHIBIT: MOT-07 | SCALE: NTS | DATE: 11/2024

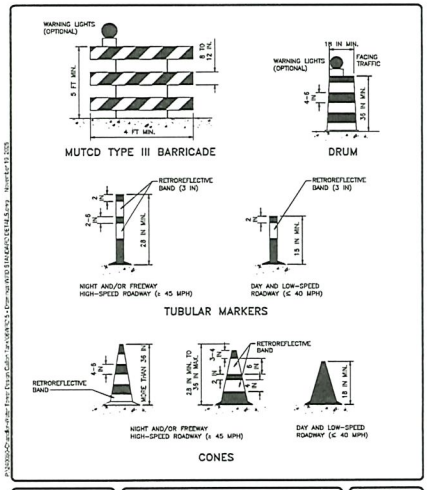

egis | CHANNELIZING DEVICES | EXHIBIT: MOT-08 | SCALE: NTS | DATE: 11/2024

egis

REVISIONS AND ISSUES	DATE	BY

BRIAN A. BULLOCK REGISTERED No. 10302366 STATE OF INDIANA PROFESSIONAL ENGINEER

11/10/2025

CONSTRUCTION PLANS FOR:
CHANDLER 1.5 MILLION GALLON WATER TOWER
CHANDLER, WARRICK COUNTY, IN SEC. 14, TWP. 6S, RNG. 9W
TOWN OF CHANDLER UTILITIES
401 E. LINCOLN AVENUE, CHANDLER, IN 47610

MAINTENANCE OF TRAFFIC DETAILS

PLAN DATE: 11/10/2025

DESIGN:	CHECK:	DRAWN:
CPEF	BAB	CPEF

PROJECT NO. 240050

SHEET NO. **C507**

ROAD RESTRICTION REQUIREMENTS:

1. ROAD CLOSURES ARE ONLY PERMISSIBLE BETWEEN 9AM AND 4PM. ROAD CLOSURES MUST BE LIFTED EACH EVENING TO ALLOW TWO WAY TRAFFIC OF ALL STREETS.
2. INCOMPLETE WORK WILL BE CLOSED EACH EVENING WITH APPROPRIATE BARRICADES AND SIGNAGE. INCOMPLETE EXCAVATIONS SHALL BE COVERED AS NEEDED, USING STEEL PLATES, TEMPORARY BACKFILL, OR OTHER APPROVED MEANS. TRENCHES WILL BE FILLED OR BARRICADED DAILY.

ACCESS TO BUSINESS REQUIREMENTS:

1. CONTRACTOR SHALL CONTACT EACH BUSINESS A MINIMUM OF 1 WEEK PRIOR TO WORK IN FRONT OF THAT BUSINESS TO DISCUSS ACCESS NEEDS.
2. CONTRACTOR SHALL SCHEDULE THEIR WORK TO MINIMIZE IMPACTS TO BUSINESSES. CONTRACTOR SHALL COORDINATE WITH EACH BUSINESS AND WILL CONFIRM THAT THE PROPOSED WORK SCHEDULE IS ACCEPTABLE TO THE BUSINESS OWNER.

ACCESS TO RESIDENTIAL PROPERTIES:

1. CONTRACTOR SHALL NOTIFY EACH RESIDENCE/PROPERTY OWNER TO WORK A MINIMUM OF 2 BUSINESS DAYS IN ADVANCE OF RESTRICTING ACCESS TO THEIR PROPERTY.
2. WORK SHALL BE CONDUCTED IN A MANNER TO MINIMIZE INTERRUPTIONS OF ACCESS. ACCESS TO PRIVATE DRIVES SHALL BE RESTORED DAILY USING TEMPORARY AGGREGATE OR PLATING.

SIGN AND BARRICADE NOTES:

1. ALL TEMPORARY SIGNAGE AND BARRICADES SHALL BE IN ACCORDANCE WITH THE INDIANA MANUAL OF UNIFORM TRAFFIC CONTROL DEVICES.
2. SIGNS LISTED ARE SUGGESTIONS ONLY. CONTRACTOR SHALL ESTABLISH SIGN AND BARRICADE NEEDS BASED ON NUMBER AND LOCATIONS OF WORKZONES.

NOTIFICATION REQUIREMENTS:

1. CONTRACTOR SHALL OBTAIN AND UPDATE RIGHT OF WAY PERMIT(S) ON AN AS-NEEDED BASIS.
2. RIGHT OF WAY PERMIT SHALL BE OBTAINED AT LEAST TWO DAYS PRIOR TO WORK IN PUBLIC STREETS AND RIGHTS-OF-WAY. ALL PERMIT REQUIREMENTS MUST BE SATISFIED BY CONTRACTOR.
3. NOTIFY PROJECT OWNER FIRE DEPARTMENT AND SCHOOLS PRIOR TO ANY LANE RESTORATION/CLOSURES AS APPLICABLE.

SPEED (S)	TAPER LENGTH (L) IN FEET
40 MPH OR LESS	$L=\frac{WS^2}{60}$
45 MPH OR MORE	L=WS

WHERE:
L=TAPER LENGTH IN FEET
W=WIDTH OF OFFSET IN FEET
S= POSTED SPEED LIMIT, OR OFF-PEAK 85TH PERCENTILE SPEED PRIOR TO WORK STARTING, OR THE ANTICIPATED OPERATING SPEED IN MPH

DISTANCE BETWEEN SIGNS (FT)				
ROAD TYPE		A	B	C
URBAN (LOW SPEED)*		100	100	100
URBAN (HIGH SPEED)*		350	350	350
RURAL		500	500	500
EXPRESSWAY/FREEWAY		1000	1500	2640

* SPEED CATEGORY TO BE DETERMINED BY HIGHWAY AGENCY

egis

MOT NOTES AND DISTANCE TABLES

EXHIBIT: MOT-09
SCALE: NTS
DATE: 11/2024

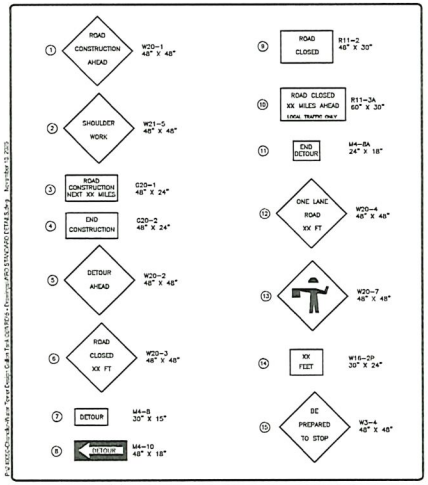

egis

ROAD SIGNS

EXHIBIT: MOT-10
SCALE: NTS
DATE: 11/2024

egis

BY	DATE	REVISIONS AND ISSUES

BRIAN A. BULLOCK
REGISTERED
No. 10302366
STATE OF INDIANA
PROFESSIONAL ENGINEER
11/10/2025

CONSTRUCTION PLANS FOR:
CHANDLER 1.5 MILLION GALLON WATER TOWER
CHANDLER, WARRICK COUNTY, IN SEC. 14, TWP. 6S, RNG. 9W
TOWN OF CHANDLER UTILITIES
401 E. LINCOLN AVENUE, CHANDLER, IN 47610

MAINTENANCE OF TRAFFIC DETAILS

PLAN DATE: 11/10/2025

DESIGN:	CHECK:	DRAWN:
CPEF	BAB	CPEF

PROJECT NO. 240050

SHEET NO. **C508**

P:\240050\Chandler Water Tower Design Gallon Tank 6000\03-Drawings\ARCH STANDARD DETAILS.dwg Monday, November 10, 2025 10:42:41 AM

WARRICK COUNTY HIGHWAY ENGINEER

107 WEST LOCUST STREET, COURTHOUSE, ROOM 208, BOONVILLE, IN 47601
PHONE (812) 897-6094 -- FAX (812) 897-6109

General Specifications for Road Cuts and Work in County Road Right-of-Way:

1. *Saw cut the pavement uniformly.*
2. *All road crossings and work within 3.0 feet of the edge of the road pavement shall use flowable fill backfill to a level as specified on the attached Exhibit "A". For an asphalt pavement, the top 4" shall be asphalt pavement with a smooth transition from the cut to the existing roadway (See attached Exhibit "A"). For a concrete pavement, the top 6" shall be concrete with a minimum patch size that is 2.0 feet wider than the trench on either side (See attached Exhibit "A").*
3. *If required by the Board of County Commissioners, applicant shall be required to pave over the cut in addition to the above criteria a total of 50.0 feet long overlay, (2) two lanes wide, twenty-five (25) feet on either side of the cut, w/ milled ends for smooth pavement transition.*
4. *Within 3.0 feet of the pavement edge, top 6 inches shall be compacted aggregate shoulder.*
5. *The proposed Utility shall not be installed between the roadway edge of pavement and the drainage ditch or within the limits of the drainage ditch .*
6. *A minimum of eight (8) feet distance from the roadway edge of pavement to the face of a power pole shall be maintained.*
7. *The proposed Utility is to be within the limits of the County Road Right-of-way.*
8. *All road ditches are to be kept clean and free of debris/work spoils.*
9. *All disturbed areas outside 3.0 feet of the edge of pavement shall be compacted backfill, ditches to be regraded, seeded, and strawed.*
10. *Road closures (if granted by County Commissioners) shall be notified in advance to the Warrick County Highway Department (897-6126), Warrick County Sheriff Department, and the Warrick County School Transportation Office.*
11. *All work activity shall have proper signage and advanced warning as stated in the Manual of Uniform Traffic Control Devices.*
12. *Any damage to the roadways involved in this construction activity shall be repaired to its original condition prior to the disturbance or as required by the County Commissioners (this includes any pavement markings and signage).*
13. *Efforts to minimize road closures or restricted traffic flow on the affected roadway shall be utilized. Placing excavated material in the roadway shall be minimized as much as practical. Placing material in the roadway increases the potential for pavement repair due to heavy equipment operations on the pavement. All excess excavated material shall be removed from the site and properly disposed of.*
14. *Any changes to the proposed work must be submitted prior to the work taking place. A complete set of "As-Built" drawings shall be submitted to this office if applicable.*
15. *Applicant shall be responsible for maintaining stability of the backfill for a minimum period of six (6) months upon completion of the project.*
16. *An appropriate size & type of encasement of all water and sanitary sewer utility crossings under County Roadways shall be required to a minimum of 5 feet beyond both sides of existing edge of pavement.*
17. *All asphalt pavement (not being overlayed) shall utilize an appropriate bituminous crack sealant around the asphalt patch/cut perimeter.*

Adopted by the Warrick County Board of Commissioners on August 8th, 2001 - Revised: April 5th, 2024.

Exhibit "A"

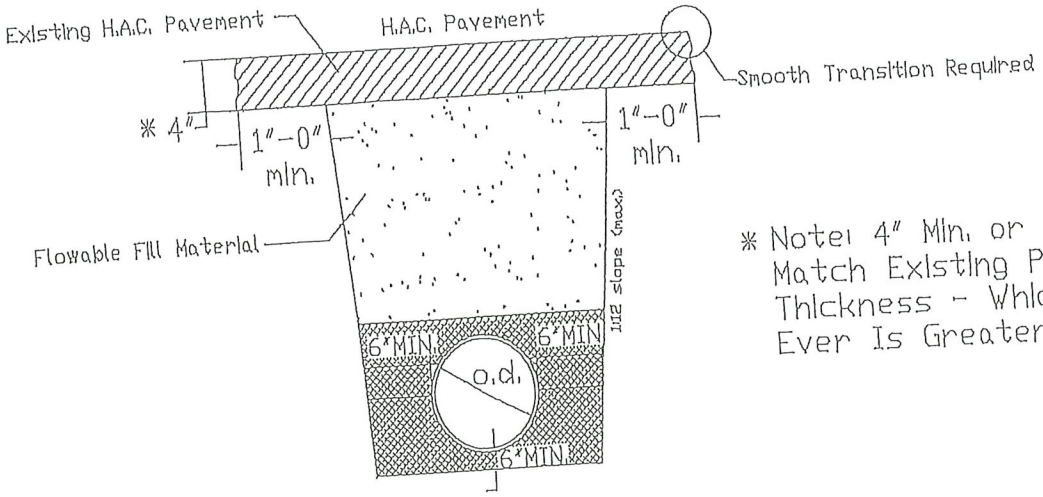

* Note: 4" Min. or Match Existing Pavement Thickness - Which Ever Is Greater.

Trench Backfill Crossing Asphalt or Chipseal Road

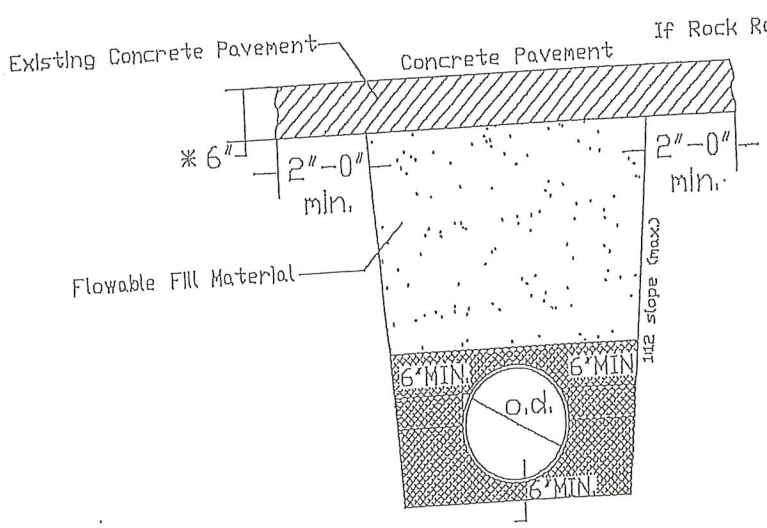

* Note: 6" Min. or Match Existing Pavement Thickness - Which Ever Is Greater.

Trench Backfill Crossing Concrete or Rock Road

work zone to "d" feet from the far end of the work zone (where "d" = length of maximum # of cars in storage + distance required for driver to react + distance required for vehicle to stop), and:

Posted ** Speed	d (feet) *
20	310
25	370
30	430
35	495
40	555
45	615
50	670
55	755

* These shall be increased for wet pavement, gravel or on descending grades.
** Use 55 MPH if not posted.
*** These are guidelines based on the Handbook for Traffic Control - HERPICC, the Indiana Manual on Uniform Traffic Control Devices - 1988 IDOH and the Handbook of Traffic Control Practices for Low-Volume Roads in Indiana - HERPICC 1984. These are only guidelines and as specified in the manuals, good judgment should be used in determining when flaggers should be used but may not be required by these guidelines.

(4) The work activity does not create congestion or backup of more than five vehicles at any time.

(B) The work zone shall include all cones making the taper protecting the actual work area. Traffic control devices, placement of traffic control devices and requirements for flaggers (including clothing, procedures and locations) shall be detailed in the HERPICC - Handbook for Traffic Control in Construction and Maintenance Areas. A lane shall be considered partially obstructed when a ten-foot lane for each direction of traffic can be maintained. (BC Ord. 1998-4, passed 5-11-98) Penalty, see § 92.99

§ 92.49 STANDARD PERMIT CONDITIONS FOR POLE LINES AND UNDERGROUND CABLES AND UTILITY LINES.

Due to widespread inconsistencies in the location and depth of buried cables, buried pipes and pole lines, these provisions will be standard condition of approval of most all utility permits where we have a right-of-way less than the recommended county thoroughfare plan right-of-way. Plans should reflect these requirements when submitted for permit approval. These requirements are necessary due to the limited right-of-way along many of our county roads and the problems associated with multiple utilities in the right-of-way. The location of poles and guy anchors in the flowline of ditches and the insufficient burial depth of cables and pipes has become a major problem for the County Highway Department when maintaining ditches, shoulders, installing signs and other safety related items. Where sufficient right-of-way exists, utility locations shall be as shown on the standard detail sheets elsewhere in this manual.

(A) *Pole lines.* All poles shall be located within one foot of the edge of right-of-way. All new pole installations and guy line locations shall be marked and notification made to the County Engineering Department a minimum of 96 hours before construction begins. Field adjustments shall be made at the Superintendent or County Highway Engineer's request for poles and guy lines presenting drainage and safety problems.

(B) *Buried cable and utility lines.* All buried cables and utility lines shall be located within two feet of the edge of the right-of-way with all pedestals being located a distance of two feet from the edge of right-of-way. All cables and utility lines shall be located a minimum of 48 inches below ground level. Any variances shall be requested in writing and have explicit written approval by the County Highway Engineer. This requirement is needed to allow for the installation of signs, guardrail and the maintenance and reestablishment of roadside ditches. If the permittee does not install his cables or lines at this depth, he or she shall waive all rights to damages incurred to his lines or cables made by the County Highway Department or its contractors during its routine maintenance activities and the installation of guardrail at hazardous locations.

(C) *All permits.* Any permittee or permittee's contractor who cuts an underground drain tile, whether it appears abandoned or not, shall notify the County Engineering Department immediately upon

Steve Sherwood

From: James Morton <jmorton@warrickcounty.gov> on behalf of James Morton
Sent: Wednesday, November 12, 2025 3:44 PM
To: Bobby Howard
Cc: Steve Sherwood
Subject: FW: Message from "RNP5838797BA03F"
Attachments: 20251112160004609.pdf

So I got the fee schedule sheet back from EGIS BLN for Chandler Utilities.
They put N/A on every slot. I'm pretty sure that wouldn't be correct. I didn't know really what to tell them since I have already asked for that sheet to be filled out correctly. I have the permit attached after building it together for them.

Thank you,

James Morton
Warrick County
Technical Assistant

-----Original Message-----
From: engineering@warrickcounty.gov <engineering@warrickcounty.gov>
Sent: Wednesday, November 12, 2025 4:00 PM
To: james <jmorton@warrickcounty.gov>
Subject: Message from "RNP5838797BA03F"

This E-mail was sent from "RNP5838797BA03F" (IM C2500).

Scan Date: 11.12.2025 16:00:04 (-0600)
Queries to: engineering@warrickcounty.gov

--
CONFIDENTIALITY NOTICE: The contents of this email message and any attachments are intended solely for the addressee(s) and may contain confidential and/or privileged information and may be legally protected from disclosure. If you are not the intended recipient of this message or their agent, or if this message has been addressed to you in error, please immediately alert the sender by reply email and then delete this message and any attachments. If you are not the intended recipient, you are hereby notified that any use, dissemination, copying, or storage of this message or its attachments is strictly prohibited.

From: James Morton <jmorton@warrickcounty.gov>
Sent: Tuesday, November 18, 2025 11:59 AM
To: FREY Carl
Cc: BULLOCK Brian; TKinder@townofchandler.org
Subject: FW: Town of Chandler - Water Tower - ROW Permit Application
Attachments: Permit No. 2025-188.pdf

From: Steve Sherwood <ssherwood@warrickcounty.gov>
Sent: Tuesday, November 18, 2025 10:57 AM
To: James Morton <jmorton@warrickcounty.gov>
Cc: Bobby Howard <bhoward@warrickcounty.gov>
Subject: FW: Town of Chandler - Water Tower - ROW Permit Application

James:

Please forward the attached executed permit to the applicant. Please make the applicant aware of the additional requirements for this permit. The Road closure is limited to a maximum of five (5) days (Monday through Friday). Closure beyond that time period must be approved by the County Engineer. Advanced notification and signage is required for the public of the pending road closure for proper notification, for a minimum of seven (7) days prior to the proposed closure. Applicant is to notify all fire, sheriff, emergency and school corporation of the closure. Applicant may be required to perform additional asphalt paving of the roadway beyond the road cut, depending upon potential damage to the roadway that may occur due to the related construction activity. The roadway cut backfill is required to be flowable fill, as specified within the permit. Thanks.

Steve

From: Bobby Howard <bhoward@warrickcounty.gov>
Sent: Tuesday, November 11, 2025 3:52 PM
To: Steve Sherwood <ssherwood@warrickcounty.gov>; James Morton <jmorton@warrickcounty.gov>
Subject: Fwd: Town of Chandler - Water Tower - ROW Permit Application

Respectfully,

Robert Howard Jr., P.E.
Warrick County Highway Engineer
812-897-6094 Engineering
bhoward@warrickcounty.gov
812-897-6126 Highway Garage

---------- Forwarded message ---------
From: **FREY Carl** <Carl.FREY@egis-group.com>

Date: Tue, Nov 11, 2025, 2:41 PM
Subject: Town of Chandler - Water Tower - ROW Permit Application
To: engineer@warrickcounty.gov <engineer@warrickcounty.gov>
Cc: BULLOCK Brian <Brian.BULLOCK@egis-group.com>, Tyler Kinder <tkinder@townofchandler.org>

Good afternoon,

At the following link is a ROW Permit application for water line and driveway apron work that will occur during the upcoming water tower project for the Town of Chandler: *Town of Chandler - Water Tower - ROW Permit Application*. Within this link there is a cover letter, the permit application, and a detailed set of plans dated 11/10/2025. There will be a road cut along Fuquay Road to tie into the existing water main that is detailed in the application and plans. Please let me or Brian Bullock (cc'd) know if you have nay questions or trouble accessing the link to the documents.

Thanks,

Carl Frey, EIT
Water Resources Engineer | Energy and Sustainable Cities | Water and Energy | Americas | North America
8320 Craig Street
46250 IN Indianapolis | United States
Tel. 317-558-7516
carl.frey@egis-group.com | www.egis-group.com

Ce message et ses pièces jointes peuvent contenir des informations confidentielles ou privilégiées et ne doivent donc pas être diffusés, exploités ou copiés sans autorisation. Si vous avez reçu ce message par erreur, merci de le signaler à l'expéditeur et le détruire ainsi que les pièces jointes. Les messages électroniques étant susceptibles d'altération, Egis décline toute responsabilité si ce message a été altéré, déformé ou falsifié. Merci.

This message and its attachments may contain confidential or privileged information that may be protected by law; they should not be distributed, used or copied without authorisation. If you have

received this email in error, please notify the sender and delete this message and its attachments. As emails may be altered, Egis is not liable for messages that have been modified, changed or falsified. Thank you.

Data sensitivity - Internal

CONFIDENTIALITY NOTICE: The contents of this email message and any attachments are intended solely for the addressee(s) and may contain confidential and/or privileged information and may be legally protected from disclosure. If you are not the intended recipient of this message or their agent, or if this message has been addressed to you in error, please immediately alert the sender by reply email and then delete this message and any attachments. If you are not the intended recipient, you are hereby notified that any use, dissemination, copying, or storage of this message or its attachments is strictly prohibited.

CONFIDENTIALITY NOTICE: The contents of this email message and any attachments are intended solely for the addressee(s) and may contain confidential and/or privileged information and may be legally protected from disclosure. If you are not the intended recipient of this message or their agent, or if this message has been addressed to you in error, please immediately alert the sender by reply email and then delete this message and any attachments. If you are not the intended recipient, you are hereby notified that any use, dissemination, copying, or storage of this message or its attachments is strictly prohibited.

CONFIDENTIALITY NOTICE: The contents of this email message and any attachments are intended solely for the addressee(s) and may contain confidential and/or privileged information and may be legally protected from disclosure. If you are not the intended recipient of this message or their agent, or if this message has been addressed to you in error, please immediately alert the sender by reply email and then delete this message and any attachments. If you are not the intended recipient, you are hereby notified that any use, dissemination, copying, or storage of this message or its attachments is strictly prohibited.

CSGP

(to be included upon receipt of permit approval)

Warrick County Building Permit

WARRICK COUNTY BUILDING COMMISSION

COMMERCIAL TANK/TOWER PERMIT APPLICATION

Tank ☐ Tower ☑ Co-Locate ☐

Date Issued 9/11/2025

Improvement Location Permit N/A

Building Permit 01-38663

Zoning Classification

Permit Fee: $0.00

Applicant Name EGIS

Phone Number (317) 558 - 7516

Address 2855 FUQUAY ROAD CHANDLER

Building Contractor EGIS - CARL EGIS - WATER RESOURCE ENGINEER

Description NEW WATER TOWER FOR CHANDLER UTILITIES

Estimated Cost $0.00

I hereby certify that the information contained within is correct and true to the best of my knowledge. I agree to abide by all applicable laws of this jurisdiction and to inform the Building Commission if any changes are made affecting this application.

SIGNATURE OF APPLICANT: [signature]

FOR BUILDING INSPECTIONS: CALL 812-431-4391

Thank you!

WARRICK CO. BUILDING COMMISSION
Courthouse
BOONVILLE, IN 47601
Approved By State Board of Accounts

CRB 111-2

CASH RECEIPT Date 9/9/2025 01- 38663

Received From EGIS - Carl Egis - Water Resource Eng.

Address 2855 Fuquay Rd. NB.

Dollars $ 0.00

For Water Tower - Chandler Utilities

317-558-7516

ACCOUNT			HOW PAID		
AMT. OF ACCOUNT			CASH		
AMT. PAID			CHECK		
BALANCE DUE			MONEY ORDER ☐ CREDIT CARD ☐		

By [signature]

WARRICK COUNTY BUILDING COMMISSION
107 West Locust Street, Suite 208
Boonville, IN 47601

Warrick County INDIANA

Give this instruction sheet to the person who will be responsible for calling in the inspection.

A TWENTY-FOUR (24) HOUR notice must be given to the inspector, with the exception of open footer and posthole inspection. Footer inspections and posthole inspections may be called in or texted in on the cell phone (812-431-4391).

FOOTER INSPECTIONS MUST BE CALLED IN OR TEXTED IN BY 9:00 A.M. IF YOU DO NOT – YOU WILL NOT RECEIVE AN INSPECTION AND YOUR FOOTER WILL BE REJECTED UNLESS POURED THE NEXT DAY.

All inspections should be called or texted into (812)431-4391 and leave a detailed message with the permit number, address and the type of inspection you need.

Required inspections:

1. Open Footer and/or Postholes (before concrete is poured in footer)
2. Foundation (before framing).
3. Basement walls – if applicable.
4. Waterproofing Basement Walls – if applicable.
5. Framing, Electrical, Plumbing and Heating & Air – roughed in (before insulating).
6. Insulation inspection (before drywalling).
7. Firewall Inspection (only for attached units).
8. Gas & Electrical hook up. (Reminder: CenterPoint will not turn on power until the Inspector has tagged the meter.)
9. Final inspection.

When the job is completed, regardless of what it is, it is MANDATORY to call for a FINAL INSPECTION.

**Basements built on strip ground needs to be vented with an exhaust system. See Ordinance #2024-21.

New Construction: The building cannot be occupied until the inspector issues a CERTIFICATE OF OCCUPANCY at the time of final inspection.

When calling for an inspection, you must have the following information:

1. Permit # 01-38663.
2. Project address_____.
3. Type of inspection requesting (as noted above).
4. Leave your name and phone number.

The above follows the Warrick County Commissioners Ordinance No. 2003-14, 2006-11 & 2024-21.

Jeff Daily - Building Inspector
(812) 431- 4391

This operation is licensed by the Warrick County Building Commission.

Number 01-38663 Date 9-9-2025 Class WATER TOWER

Location 2855 FUQUAY ROAD Owner EGIS WATER RES.

Building Permit

COUNTY OF WARRICK

All building materials, sand and gravel shall be stored on the building lot, and all work of fabrication shall be done upon the premises, as the county streets and sidewalks are public property and must be regarded as such at all times.

Confine building operations strictly within property lines. Encroachment upon public property will be condemned and removed at builders expense.

Contractors and workmen are warned against allowing rubbish to accumulate in the streets, sidewalks or alleys adjacent to the property upon which they may be engaged in building operations. All straw and litter, shavings and like material must be confined in sacks or boxes to prevent it from being scattered. Dirt must not be allowed to accumulate, gutters and drains must not be stopped, and all scraps, dirt and litter must be removed within twenty-four hours. All hauling must be done in tight beds and shall not be loaded in such manner as to scatter sand, gravel or other material.

Warning cards and warning lights must be displayed at all times.

The Building Code covers everything relative to the construction of all classes of buildings. If you are in doubt consult the Indiana State Building Code, which is the law on this subject, and which will be strictly interpreted.

This license is issued with the understanding that all State Laws, City and County Ordinances relative to the construction, design or arrangement of buildings will be complied with. The right is reserved to revoke this license and stop work on operation for the purpose of further investigation or where work contrary to Ordinance is being pursued.

IMPORTANT NOTICE TO PERMIT HOLDER

The Permit Holder is responsible for the compliance with and adherence Building Code (Warrick County Commissioners Ordinance 2003-14 and Ordinance 2006-11, as amended) and proper construction of the construction covered by this permit. The issuance of this permit and inspections by Warrick County or its agents does not shift this responsibility from the Permit Holder to Warrick County or its agents.

Neither this permit nor any inspections performed pursuant to the Building Code in any way warrants Code compliance or workmanlike construction.

THIS IS IMPORTANT!

This notice must be tacked up in a conspicuous place on the premises as soon as the permit is obtained, and shall not be removed until the completion of the work. If this Notice is lost or destroyed, another will be issued upon request and giving number and date. During early stages, you may paint number and job address on a board and post it. Your work may be stopped unless you keep a set of approved plans at the job site and available to inspector.

KEEP PERMIT POSTED.

00410

Bid Form

BID FORM FOR CONSTRUCTION CONTRACT

The terms used in this Bid with initial capital letters have the meanings stated in the Instructions to Bidders, the General Conditions, and the Supplementary Conditions.

ARTICLE 1—OWNER AND BIDDER

1.01 This Bid is submitted to: **Town of Chandler, 401 E. Lincoln Ave., Chandler, IN 47610**

1.02 The undersigned Bidder proposes and agrees, if this Bid is accepted, to enter into an Agreement with Owner in the form included in the Bidding Documents to perform all Work as specified or indicated in the Bidding Documents for the prices and within the times indicated in this Bid and in accordance with the other terms and conditions of the Bidding Documents.

ARTICLE 2—ATTACHMENTS TO THIS BID

2.01 The following documents are submitted with and made a condition of this Bid:

A. Required Bid security;

B. Evidence of authority to do business in the state of the Project; or a written covenant to obtain such authority within the time for acceptance of Bids;

C. Required Bidder Qualification Statement with supporting data; and

D. **Contractors Bid for Public Work - Form 96**

E. Bid Form Attachment A- Bid Prices

F. Other Items

2.02 The following documents are required to be submitted within 5 days of request by Owner after bid opening, and are made a condition of this bid:

A. List of Proposed Subcontractors;

B. List of Proposed Suppliers;

ARTICLE 3—BASIS OF BID—LUMP SUM BID AND UNIT PRICES

3.01 *Unit Price Bids*

A. Bidder will perform Work in accordance with the Contract Documents at the unit prices indicated in Bid Form Attachment A – Bid Prices, attached to, and submitted with, this Bid Form.

B. Bidder acknowledges that:

1. each Bid Unit Price includes an amount considered by Bidder to be adequate to cover Contractor's overhead and profit for each separately identified item, and

2. estimated quantities are not guaranteed, and are solely for the purpose of comparison of Bids, and final payment for all Unit Price Work will be based on actual quantities, determined as provided in the Contract Documents.

Copyright© 2018 National Society of Professional Engineers, American Council of Engineering Companies, and American Society of Civil Engineers. All rights reserved.

ARTICLE 4—TIME OF COMPLETION

4.01 Bidder agrees that the Work will be substantially complete and will be completed and ready for final payment in accordance with Paragraph 15.06 of the General Conditions on or before the dates or within the number of calendar days indicated in the Agreement.

4.02 Bidder accepts the provisions of the Agreement as to liquidated damages.

ARTICLE 5—BIDDER'S ACKNOWLEDGEMENTS: ACCEPTANCE PERIOD, INSTRUCTIONS, AND RECEIPT OF ADDENDA

5.01 *Bid Acceptance Period*

A. This Bid will remain subject to acceptance for **90 days** after the Bid opening, or for such longer period of time that Bidder may agree to in writing upon request of Owner.

5.02 *Instructions to Bidders*

A. Bidder accepts all of the terms and conditions of the Instructions to Bidders, including without limitation those dealing with the disposition of Bid security.

5.03 *Receipt of Addenda*

A. Bidder hereby acknowledges receipt of the following Addenda **(Bidder to Complete this table)**:

Addendum Number	Addendum Date

ARTICLE 6—BIDDER'S REPRESENTATIONS AND CERTIFICATIONS

6.01 *Bidder's Representations*

A. In submitting this Bid, Bidder represents the following:

1. Bidder has examined and carefully studied the Bidding Documents, including Addenda.
2. Bidder has visited the Site, conducted a thorough visual examination of the Site and adjacent areas, and become familiar with the general, local, and Site conditions that may affect cost, progress, and performance of the Work.
3. Bidder is familiar with all Laws and Regulations that may affect cost, progress, and performance of the Work.
4. Bidder has carefully studied the reports of explorations and tests of subsurface conditions at or adjacent to the Site and the drawings of physical conditions relating to existing surface or subsurface structures at the Site that have been identified in the Supplementary Conditions, with respect to the Technical Data in such reports and drawings.

Copyright© 2018 National Society of Professional Engineers, American Council of Engineering Companies, and American Society of Civil Engineers. All rights reserved.

5. Bidder has carefully studied the reports and drawings relating to Hazardous Environmental Conditions, if any, at or adjacent to the Site that have been identified in the Supplementary Conditions, with respect to Technical Data in such reports and drawings.

6. Bidder has considered the information known to Bidder itself; information commonly known to contractors doing business in the locality of the Site; information and observations obtained from visits to the Site; the Bidding Documents; and the Technical Data identified in the Supplementary Conditions or by definition, with respect to the effect of such information, observations, and Technical Data on (a) the cost, progress, and performance of the Work; (b) the means, methods, techniques, sequences, and procedures of construction to be employed by Bidder, if selected as Contractor; and (c) Bidder's (Contractor's) safety precautions and programs.

7. Based on the information and observations referred to in the preceding paragraph, Bidder agrees that no further examinations, investigations, explorations, tests, studies, or data are necessary for the performance of the Work at the Contract Price, within the Contract Times, and in accordance with the other terms and conditions of the Contract.

8. Bidder is aware of the general nature of work to be performed by Owner and others at the Site that relates to the Work as indicated in the Bidding Documents.

9. Bidder has given Engineer written notice of all conflicts, errors, ambiguities, or discrepancies that Bidder has discovered in the Bidding Documents, and of discrepancies between Site conditions and the Contract Documents, and the written resolution thereof by Engineer is acceptable to Contractor.

10. The Bidding Documents are generally sufficient to indicate and convey understanding of all terms and conditions for performance and furnishing of the Work.

11. The submission of this Bid constitutes an incontrovertible representation by Bidder that without exception the Bid and all prices in the Bid are premised upon performing and furnishing the Work required by the Bidding Documents.

6.02 *Bidder's Certifications*

A. The Bidder certifies the following:

1. This Bid is genuine and not made in the interest of or on behalf of any undisclosed individual or entity and is not submitted in conformity with any collusive agreement or rules of any group, association, organization, or corporation.

2. Bidder has not directly or indirectly induced or solicited any other Bidder to submit a false or sham Bid.

3. Bidder has not solicited or induced any individual or entity to refrain from bidding.

Copyright© 2018 National Society of Professional Engineers, American Council of Engineering Companies, and American Society of Civil Engineers. All rights reserved.

4. Bidder has not engaged in corrupt, fraudulent, collusive, or coercive practices in competing for the Contract. For the purposes of this Paragraph 8.02.A:

    a. Corrupt practice means the offering, giving, receiving, or soliciting of anything of value likely to influence the action of a public official in the bidding process.

    b. Fraudulent practice means an intentional misrepresentation of facts made (a) to influence the bidding process to the detriment of Owner, (b) to establish bid prices at artificial non-competitive levels, or (c) to deprive Owner of the benefits of free and open competition.

    c. Collusive practice means a scheme or arrangement between two or more Bidders, with or without the knowledge of Owner, a purpose of which is to establish bid prices at artificial, non-competitive levels.

    d. Coercive practice means harming or threatening to harm, directly or indirectly, persons or their property to influence their participation in the bidding process or affect the execution of the Contract.

Copyright© 2018 National Society of Professional Engineers, American Council of Engineering Companies, and American Society of Civil Engineers. All rights reserved.

BIDDER hereby submits this Bid as set forth above:

Bidder:

_____

(typed or printed name of organization)

By: _____

(individual's signature)

Name: _____

(typed or printed)

Title: _____

(typed or printed)

Date: _____

(typed or printed)

If Bidder is a corporation, a partnership, or a joint venture, attach evidence of authority to sign.

Attest: _____

(individual's signature)

Name: _____

(typed or printed)

Title: _____

(typed or printed)

Date: _____

(typed or printed)

Address for giving notices:

_____

_____

Bidder's Contact:

Name: _____

(typed or printed)

Title: _____

(typed or printed)

Phone: _____

Email: _____

Address:

_____

_____

_____

Bidder's Contractor License No.: (if applicable) _____

Copyright© 2018 National Society of Professional Engineers, American Council of Engineering Companies, and American Society of Civil Engineers. All rights reserved.

Bid Form Attachment A (00410A)

Chandler Utilities: 1.5 Million Gallon Water Tower

Alternative: New Paradise Tank, Plank Control Valve & Existing Paradise & Frame Demolitions

Bidder will complete the Work for the following Unit price(s):

CONSTRUCTION COSTS					
ITEM NO.	**DESCRIPTION**	**QTY.**	**UNIT**	**UNIT PRICE**	**TOTAL COST**
1	**ADMINISTRATIVE**				
1.001	Mobilization & Demobilization	1	LS		
1.002	Erosion Control	1	LS		
1.003	Maintenance of Traffic	1	LS		
1.006	Dewatering	1	LS		
1.007	Field Offices	24	Mo		
2	**BACKFILL AND PIPE INSTALLATION**				
2.001	Structure Backfill over Utilities	110	LF		
2.002	Flowable Backfill over Utilities	50	LF		
3	**WATER SYSTEMS**				
3.000	1.5 Million Gallon Composite Elevated Water Tower	1	LS		
3.001	3" Water Main	85	LF		
3.002	6" Water Main	15	LF		
3.004	10" Water Main	35	LF		
3.005	12" Water Main	12	LF		
3.007	16" Water Main	200	LF		
3.082	3" Gate Valve	1	EA		
3.083	6" Gate Valve	1	EA		
3.085	10" Gate Valve	2	EA		
3.086	12" Gate Valve	1	EA		
3.089	16" Butterfly Valve	1	EA		
3.100	Fire Hydrant	1	EA		
3.101	Fire Hydrant, Remove	1	EA		
3.121	Dry Water Main Connection, 10"	1	EA		
3.130	Line Cap, 6" and larger	1	EA		
3.181	Plank Tank Contol Valve	1	LS		
3.182	Water Fill Station	1	LS		
3.183	Existing Tank Demolition (2 Tanks)	1	LS		
3.184	Obstruction Light	1	LS		
7	**STORMWATER SYSTEMS**				
7.001	Gravity Storm Sewer, 12" diameter (10' depth and shallower)	50	LF		
7.003	Gravity Storm Sewer, 15" diameter (10' depth and shallower)	233	LF		
7.042	End Section, 15"	1	EA		
7.048	INDOT Type A Inlet	1	EA		
7.054	INDOT Type E Inlet	1	EA		

Data sensitivity - Internal

7.071	INDOT Type C Manhole	2	EA		
9	**BASES AND PAVEMENTS**				
9.017	Pavement Removal	175	SY		
9.032	Pavement Repair (Over Utility)	46	SY		
9.033	Heavy Duty HMA Pavement	935	SY		
9.034	Heavy Duty Concrete Pavement	130	SY		
10	**SITE WORK AND LANDSCAPING**				
10.002	Yard Seeding (INDOT Type U)	3500	SY		
10.020	Chain Link Fencing	650	LF		
10.021	Rolling Gate with Operator	1	EA		

Total Unit Price Base Bid Amount, inclusive of all Pay Items:

_____ $ _____

(words) *(numerals)*

Bidder: _____

By: _____ **Date:** _____

(Signature of Bid Form Signatory)

Name: _____

Data sensitivity - Internal

00411

Bid Proposal Form 96

CONTRACTOR'S BID FOR PUBLIC WORK - FORM 96

State Form 52414 (R2 / 2-13) / Form 96 (Revised 2013)
Prescribed by State Board of Accounts

PART I
(To be completed for all bids. Please type or print)

Date *(month, day, year)*:_____

1. Governmental Unit (Owner):_____
2. County :_____
3. Bidder (Firm):_____

   Address:_____

   City/State/ZIPcode:_____
4. Telephone Number:_____
5. Agent of Bidder *(if applicable)*:_____

Pursuant to notices given, the undersigned offers to furnish labor and/or material necessary to complete the public works project of _____

(Governmental Unit) in accordance with plans and specifications prepared by _____

_____ and dated _____ for the sum of

_____ $_____

The undersigned further agrees to furnish a bond or certified check with this bid for an amount specified in the notice of the letting. If alternative bids apply, the undersigned submits a proposal for each in accordance with the notice. Any addendums attached will be specifically referenced at the applicable page.

If additional units of material included in the contract are needed, the cost of units must be the same as that shown in the original contract if accepted by the governmental unit. If the bid is to be awarded on a unit basis, the itemization of the units shall be shown on a separate attachment.

The contractor and his subcontractors, if any, shall not discriminate against or intimidate any employee, or applicant for employment, to be employed in the performance of this contract, with respect to any matter directly or indirectly related to employment because of race, religion, color, sex, national origin or ancestry. Breach of this covenant may be regarded as a material breach of the contract.

CERTIFICATION OF USE OF UNITED STATES STEEL PRODUCTS
(If applicable)

I, the undersigned bidder or agent as a contractor on a public works project, understand my statutory obligation to use steel products made in the United States (I.C. 5-16-8-2). I hereby certify that I and all subcontractors employed by me for this project will use U.S. steel products on this project if awarded. I understand that violations hereunder may result in forfeiture of contractual payments.

ACCEPTANCE

The above bid is accepted this _____ day of _____, _____, subject to the following conditions: _____

_____

Contracting Authority Members:

_____ _____

_____ _____

_____ _____

PART II

(For projects of $150,000 or more – IC 36-1-12-4)

Governmental Unit: _____

Bidder (Firm) _____

Date *(month, day, year):* _____

These statements to be submitted under oath by each bidder with and as a part of his bid. Attach additional pages for each section as needed.

SECTION I EXPERIENCE QUESTIONNAIRE

1. What public works projects has your organization completed for the period of one (1) year prior to the date of the current bid?

Contract Amount	Class of Work	Completion Date	Name and Address of Owner

2. What public works projects are now in process of construction by your organization?

Contract Amount	Class of Work	Expected Completion Date	Name and Address of Owner

3. Have you ever failed to complete any work awarded to you? _____ If so, where and why?

_____

_____

_____

4. List references from private firms for which you have performed work.

_____

_____

_____

_____

_____

SECTION II PLAN AND EQUIPMENT QUESTIONNAIRE

1. Explain your plan or layout for performing proposed work. *(Examples could include a narrative of when you could begin work, complete the project, number of workers, etc. and any other information which you believe would enable the governmental unit to consider your bid.)*

_____

_____

_____

_____

_____

2. Please list the names and addresses of all subcontractors *(i.e. persons or firms outside your own firm who have performed part of the work)* that you have used on public works projects during the past five (5) years along with a brief description of the work done by each subcontractor.

_____

_____

_____

_____

_____

3. If you intend to sublet any portion of the work, state the name and address of each subcontractor, equipment to be used by the subcontractor, and whether you will require a bond. However, if you are unable to currently provide a listing, please understand a listing must be provided prior to contract approval. Until the completion of the proposed project, you are under a continuing obligation to immediately notify the governmental unit in the event that you subsequently determine that you will use a subcontractor on the proposed project.

4. What equipment do you have available to use for the proposed project? Any equipment to be used by subcontractors may also be required to be listed by the governmental unit.

5. Have you entered into contracts or received offers for all materials which substantiate the prices used in preparing your proposal? If not, please explain the rationale used which would corroborate the prices listed.

SECTION III CONTRACTOR'S FINANCIAL STATEMENT

Attachment of bidder's financial statement is mandatory. Any bid submitted without said financial statement as required by statute shall thereby be rendered invalid. The financial statement provided hereunder to the governing body awarding the contract must be specific enough in detail so that said governing body can make a proper determination of the bidder's capability for completing the project if awarded.

SECTION IV CONTRACTOR'S NON – COLLUSION AFFIDAVIT

The undersigned bidder or agent, being duly sworn on oath, says that he has not, nor has any other member, representative, or agent of the firm, company, corporation or partnership represented by him, entered into any combination, collusion or agreement with any person relative to the price to be bid by anyone at such letting nor to prevent any person from bidding nor to include anyone to refrain from bidding, and that this bid is made without reference to any other bid and without any agreement, understanding or combination with any other person in reference to such bidding.

He further says that no person or persons, firms, or corporation has, have or will receive directly or indirectly, any rebate, fee, gift, commission or thing of value on account of such sale.

SECTION V OATH AND AFFIRMATION

I HEREBY AFFIRM UNDER THE PENALTIES FOR PERJURY THAT THE FACTS AND INFORMATION CONTAINED IN THE FOREGOING BID FOR PUBLIC WORKS ARE TRUE AND CORRECT.

Dated at _____ this _____ day of _____, _____

_____
(Name of Organization)

By_____

_____
(Title of Person Signing)

ACKNOWLEDGEMENT

STATE OF _____)
) ss
COUNTY OF_____)

Before me, a Notary Public, personally appeared the above-named _____ and swore that the statements contained in the foregoing document are true and correct.

Subscribed and sworn to before me this _____ day of _____, _____.

_____
Notary Public

My Commission Expires:_____

County of Residence:_____

Part of State Form 52414 (R2 / 2-13) / Form 96 (Revised 2013)

BID OF

_____
(Contractor)

_____
(Address)

_____

FOR

PUBLIC WORKS PROJECTS

OF

_____

_____

_____

Filed _____, _____

Action taken _____

_____

00431

Bid Bond

BID BOND (PENAL SUM FORM)

Bidder Name: Address *(principal place of business)*:	**Surety** Name: Address *(principal place of business)*:
Owner Name: **Chandler Utilities** Address *(principal place of business)*: **Town of Chandler** **401 E. Lincoln Ave.** **Chandler, IN 47610**	**Bid** Project *(name and location)*: **Chandler 1.5 Million Gallon Water Tower** **2855 IN-261** **Newburgh, IN 47630** Bid Due Date: **December 15th, 2025**
Bond Penal Sum: Date of Bond:	

Surety and Bidder, intending to be legally bound hereby, subject to the terms set forth in this Bid Bond, do each cause this Bid Bond to be duly executed by an authorized officer, agent, or representative.

Bidder	Surety
_____ *(Full formal name of Bidder)*	_____ *(Full formal name of Surety) (corporate seal)*
By: _____ *(Signature)*	By: _____ *(Signature) (Attach Power of Attorney)*
Name: _____ *(Printed or typed)*	Name: _____ *(Printed or typed)*
Title: _____	Title: _____
Attest: _____ *(Signature)*	Attest: _____ *(Signature)*
Name: _____ *(Printed or typed)*	Name: _____ *(Printed or typed)*
Title:	Title:

Notes: (1) Note: Addresses are to be used for giving any required notice. (2) Provide execution by any additional parties, such as joint venturers, if necessary.

Copyright© 2018 National Society of Professional Engineers, American Council of Engineering Companies, and American Society of Civil Engineers. All rights reserved.

1. Bidder and Surety, jointly and severally, bind themselves, their heirs, executors, administrators, successors, and assigns to pay to Owner upon default of Bidder the penal sum set forth on the face of this Bond. Payment of the penal sum is the extent of Bidder's and Surety's liability. Recovery of such penal sum under the terms of this Bond will be Owner's sole and exclusive remedy upon default of Bidder.

2. Default of Bidder occurs upon the failure of Bidder to deliver within the time required by the Bidding Documents (or any extension thereof agreed to in writing by Owner) the executed Agreement required by the Bidding Documents and any performance and payment bonds required by the Bidding Documents.

3. This obligation will be null and void if:

   3.1. Owner accepts Bidder's Bid and Bidder delivers within the time required by the Bidding Documents (or any extension thereof agreed to in writing by Owner) the executed Agreement required by the Bidding Documents and any performance and payment bonds required by the Bidding Documents, or

   3.2. All Bids are rejected by Owner, or

   3.3. Owner fails to issue a Notice of Award to Bidder within the time specified in the Bidding Documents (or any extension thereof agreed to in writing by Bidder and, if applicable, consented to by Surety when required by Paragraph 5 hereof).

4. Payment under this Bond will be due and payable upon default of Bidder and within 30 calendar days after receipt by Bidder and Surety of written notice of default from Owner, which notice will be given with reasonable promptness, identifying this Bond and the Project and including a statement of the amount due.

5. Surety waives notice of any and all defenses based on or arising out of any time extension to issue Notice of Award agreed to in writing by Owner and Bidder, provided that the total time for issuing Notice of Award including extensions does not in the aggregate exceed 120 days from the Bid due date without Surety's written consent.

6. No suit or action will be commenced under this Bond prior to 30 calendar days after the notice of default required in Paragraph 4 above is received by Bidder and Surety, and in no case later than one year after the Bid due date.

7. Any suit or action under this Bond will be commenced only in a court of competent jurisdiction located in the state in which the Project is located.

8. Notices required hereunder must be in writing and sent to Bidder and Surety at their respective addresses shown on the face of this Bond. Such notices may be sent by personal delivery, commercial courier, or by United States Postal Service registered or certified mail, return receipt requested, postage pre-paid, and will be deemed to be effective upon receipt by the party concerned.

9. Surety shall cause to be attached to this Bond a current and effective Power of Attorney evidencing the authority of the officer, agent, or representative who executed this Bond on behalf of Surety to execute, seal, and deliver such Bond and bind the Surety thereby.

10. This Bond is intended to conform to all applicable statutory requirements. Any applicable requirement of any applicable statute that has been omitted from this Bond will be deemed to be included herein as if set forth at length. If any provision of this Bond conflicts with any

Copyright© 2018 National Society of Professional Engineers, American Council of Engineering Companies, and American Society of Civil Engineers. All rights reserved.

applicable statute, then the provision of said statute governs and the remainder of this Bond that is not in conflict therewith continues in full force and effect.

11. The term “Bid” as used herein includes a Bid, offer, or proposal as applicable.

Copyright© 2018 National Society of Professional Engineers, American Council of Engineering Companies, and American Society of Civil Engineers. All rights reserved.

00434

Products List

PRODUCTS LIST

Project: _____

_____

To Engineer: Egis BLN USA, Inc.

8320 Craig Street, Indianapolis, IN 46250

From (Contractor): _____

Date: _____

Eng Project Number: _____

List products proposed for use on this Project as required by Section 01001 – Product Requirements. Attach supplemental sheets if necessary.

Section No./ Title	Generic Product Name	Proprietary Name/ Model No	Manufacturer	Classification		Supplier	Installer	Delivery Date(s)	Early Submittal Rq'd
				As Spec'd	Comparable				

Attachments

Signed by: Date:

Copies: Owner Consultants _____ _____ _____ _____ _____ _____ _____ File

00435

Subcontractors List

Advancement of Construction Technology

SUBCONTRACTORS LIST

Project: _____

_____

To: Egis BLN USA, Inc.

8320 Craig Street, Indianapolis, IN 46250

From (Contractor): _____

Date: _____

Engineer's Project Number: _____

Contract For: _____

List Subcontractors proposed for use on this Project as required by the Construction Documents. Attach supplemental sheets if necessary.

Section Number	Section Title	Firm	Address	Phone Number (Fax Number)	Contact	License

☐ Attachments

Signed by: Date:

Copies: ☐ Owner ☐ Consultants ☐ _____ ☐ _____ ☐ _____ ☐ _____ ☐ _____ ☐ _____ ☐ _____ ☐ File

© Copyright 1994, Construction Specifications Institute,
99 Canal Center Plaza, Suite 300 Alexandria, VA 22314

00451

Qualifications Statement

ARTICLE 1—GENERAL INFORMATION

1.01 Provide contact information for the Business:

Legal Name of Business:			
Corporate Office			
Name:		Phone number:	
Title:		Email address:	
Business address of corporate office:			
Local Office			
Name:		Phone number:	
Title:		Email address:	
Business address of local office:			

1.02 Provide information on the Business's organizational structure:

Form of Business:	☐ Sole Proprietorship ☐ Partnership ☐ Corporation
☐ Limited Liability Company ☐ Joint Venture comprised of the following companies:	
	1.
	2.
	3.
Provide a separate Qualification Statement for each Joint Venturer.	
Date Business was formed:	State in which Business was formed:
Is this Business authorized to operate in the Project location?	☐ Yes ☐ No ☐ Pending

1.03 Identify all businesses that own Business in whole or in part (25% or greater), or that are wholly or partly (25% or greater) owned by Business:

Name of business:		Affiliation:	
Address:			
Name of business:		Affiliation:	
Address:			
Name of business:		Affiliation:	
Address:			

Copyright© 2018 National Society of Professional Engineers, American Council of Engineering Companies, and American Society of Civil Engineers. All rights reserved.

1.04 Provide information regarding the Business's officers, partners, and limits of authority.

Name:		Title:	
Authorized to sign contracts: ☐ Yes ☐ No		Limit of Authority:	$
Name:		Title:	
Authorized to sign contracts: ☐ Yes ☐ No		Limit of Authority:	$
Name:		Title:	
Authorized to sign contracts: ☐ Yes ☐ No		Limit of Authority:	$
Name:		Title:	

ARTICLE 2—LICENSING

2.01 Provide information regarding licensure for Business:

Name of License:			
Licensing Agency:			
License No:		Expiration Date:	
Name of License:			
Licensing Agency:			
License No:		Expiration Date:	

ARTICLE 3—DIVERSE BUSINESS CERTIFICATIONS

3.01 Provide information regarding Business's Diverse Business Certification, if any. Provide evidence of current certification.

Certification	Certifying Agency	Certification Date
☐ Disadvantaged Business Enterprise		
☐ Minority Business Enterprise		
☐ Woman-Owned Business Enterprise		
☐ Small Business Enterprise		
☐ Disabled Business Enterprise		
☐ Veteran-Owned Business Enterprise		
☐ Service-Disabled Veteran-Owned Business		
☐ HUBZone Business (Historically Underutilized) Business		
☐ Other		
☐ None		

Copyright© 2018 National Society of Professional Engineers, American Council of Engineering Companies, and American Society of Civil Engineers. All rights reserved.

ARTICLE 4—SAFETY

4.01 Provide information regarding Business's safety organization and safety performance.

Name of Business's Safety Officer:		
Safety Certifications		
Certification Name	Issuing Agency	Expiration

4.02 Provide Worker's Compensation Insurance Experience Modification Rate (EMR), Total Recordable Frequency Rate (TRFR) for incidents, and Total Number of Recorded Manhours (MH) for the last 3 years and the EMR, TRFR, and MH history for the last 3 years of any proposed Subcontractor(s) that will provide Work valued at 10% or more of the Contract Price. Provide documentation of the EMR history for Business and Subcontractor(s).

Year									
Company	EMR	TRFR	MH	EMR	TRFR	MH	EMR	TRFR	MH

ARTICLE 5—FINANCIAL

5.01 Provide information regarding the Business's financial stability. Provide the most recent audited financial statement, and if such audited financial statement is not current, also provide the most current financial statement.

Financial Institution:		
Business address:		
Date of Business's most recent financial statement:		☐ Attached
Date of Business's most recent audited financial statement:		☐ Attached
Financial indicators from the most recent financial statement		
Contractor's Current Ratio (Current Assets ÷ Current Liabilities)		
Contractor's Quick Ratio ((Cash and Cash Equivalents + Accounts Receivable + Short Term Investments) ÷ Current Liabilities)		

Copyright© 2018 National Society of Professional Engineers, American Council of Engineering Companies, and American Society of Civil Engineers. All rights reserved.

ARTICLE 6—SURETY INFORMATION

6.01 Provide information regarding the surety company that will issue required bonds on behalf of the Business, including but not limited to performance and payment bonds.

Surety Name:			
Surety is a corporation organized and existing under the laws of the state of:			
Is surety authorized to provide surety bonds in the Project location?	☐ Yes ☐ No		
Is surety listed in "Companies Holding Certificates of Authority as Acceptable Sureties on Federal Bonds and as Acceptable Reinsuring Companies" published in Department Circular 570 (as amended) by the Bureau of the Fiscal Service, U.S. Department of the Treasury? ☐ Yes ☐ No			
Mailing Address (principal place of business):			
Physical Address (principal place of business):			
Phone (main):		Phone (claims):	

ARTICLE 7—INSURANCE

7.01 Provide information regarding Business's insurance company(s), including but not limited to its Commercial General Liability carrier. Provide information for each provider.

Name of insurance provider, and type of policy (CLE, auto, etc.):		
Insurance Provider	Type of Policy (Coverage Provided)	
Are providers licensed or authorized to issue policies in the Project location?		☐ Yes ☐ No
Does provider have an A.M. Best Rating of A-VII or better?		☐ Yes ☐ No
Mailing Address (principal place of business):		

Copyright© 2018 National Society of Professional Engineers, American Council of Engineering Companies, and American Society of Civil Engineers. All rights reserved.

Physical Address (principal place of business):			
Phone (main):		Phone (claims):	

ARTICLE 8—CONSTRUCTION EXPERIENCE

8.01 Provide information that will identify the overall size and capacity of the Business.

Average number of current full-time employees:	
Estimate of revenue for the current year:	
Estimate of revenue for the previous year:	

8.02 Provide information regarding the Business's previous contracting experience.

Years of experience with projects like the proposed project:			
As a general contractor:		As a joint venturer:	
Has Business, or a predecessor in interest, or an affiliate identified in Paragraph 1.03:			
Been disqualified as a bidder by any local, state, or federal agency within the last 5 years? ☐ Yes ☐ No			
Been barred from contracting by any local, state, or federal agency within the last 5 years? ☐ Yes ☐ No			
Been released from a bid in the past 5 years? ☐ Yes ☐ No			
Defaulted on a project or failed to complete any contract awarded to it? ☐ Yes ☐ No			
Refused to construct or refused to provide materials defined in the contract documents or in a change order? ☐ Yes ☐ No			
Been a party to any currently pending litigation or arbitration? ☐ Yes ☐ No			
Provide full details in a separate attachment if the response to any of these questions is Yes.			

8.03 List all projects currently under contract in Schedule A and provide indicated information.

8.04 List a minimum of three and a maximum of six projects completed in the last 5 years in Schedule B and provide indicated information to demonstrate the Business's experience with projects similar in type and cost of construction.

8.05 In Schedule C, provide information on key individuals whom Business intends to assign to the Project. Provide resumes for those individuals included in

Copyright© 2018 National Society of Professional Engineers, American Council of Engineering Companies, and American Society of Civil Engineers. All rights reserved.

Schedule C. Key individuals include the Project Manager, Project Superintendent, Quality Manager, and Safety Manager. Resumes may be provided for Business's key leaders as well.

ARTICLE 9—REQUIRED ATTACHMENTS

9.01 Provide the following information with the Statement of Qualifications:

A. If Business is a Joint Venture, separate Qualifications Statements for each Joint Venturer, as required in Paragraph 1.02.

B. Diverse Business Certifications if required by Paragraph 3.01.

C. Certification of Business's safety performance if required by Paragraph 4.02.

D. Financial statements as required by Paragraph 5.01.

E. Attachments providing additional information as required by Paragraph 8.02.

F. Schedule A (Current Projects) as required by Paragraph 8.03.

G. Schedule B (Previous Experience with Similar Projects) as required by Paragraph 8.04.

H. Schedule C (Key Individuals) and resumes for the key individuals listed, as required by Paragraph 8.05.

I. Additional items as pertinent.

Copyright© 2018 National Society of Professional Engineers, American Council of Engineering Companies, and American Society of Civil Engineers. All rights reserved.

This Statement of Qualifications is offered by:

Business: _____
(typed or printed name of organization)

By: _____
(individual's signature)

Name: _____
(typed or printed)

Title: _____
(typed or printed)

Date: _____
(date signed)

(If Business is a corporation, a partnership, or a joint venture, attach evidence of authority to sign.)

Attest: _____
(individual's signature)

Name: _____
(typed or printed)

Title: _____
(typed or printed)

Address for giving notices:

_____

_____

_____

Designated Representative:

Name: _____
(typed or printed)

Title: _____
(typed or printed)

Address:

_____

_____

_____

Phone: _____

Email: _____

Copyright© 2018 National Society of Professional Engineers, American Council of Engineering Companies, and American Society of Civil Engineers. All rights reserved.

Schedule A—Current Projects

Name of Organization					
Project Owner			Project Name		
General Description of Project					
Project Cost			Date Project Completed		
Key Project Personnel	Project Manager	Project Superintendent	Safety Manager	Quality Control Manager	
Name					
Reference Contact Information (listing names indicates approval to contacting the names individuals as a reference)					
	Name	Title/Position	Organization	Telephone	Email
Owner					
Designer					
Construction Manager					

Project Owner			Project Name		
General Description of Project					
Project Cost			Date Project Completed		
Key Project Personnel	Project Manager	Project Superintendent	Safety Manager	Quality Control Manager	
Name					
Reference Contact Information (listing names indicates approval to contacting the names individuals as a reference)					
	Name	Title/Position	Organization	Telephone	Email
Owner					
Designer					
Construction Manager					

Project Owner			Project Name		
General Description of Project					
Project Cost			Date Project Completed		
Key Project Personnel	Project Manager	Project Superintendent	Safety Manager	Quality Control Manager	
Name					
Reference Contact Information (listing names indicates approval to contacting the names individuals as a reference)					
	Name	Title/Position	Organization	Telephone	Email
Owner					
Designer					
Construction Manager					

Copyright© 2018 National Society of Professional Engineers, American Council of Engineering Companies, and American Society of Civil Engineers. All rights reserved.

Schedule B—Previous Experience with Similar Projects

Name of Organization					
Project Owner			Project Name		
General Description of Project					
Project Cost			Date Project Completed		
Key Project Personnel	Project Manager	Project Superintendent	Safety Manager	Quality Control Manager	
Name					
Reference Contact Information (listing names indicates approval to contacting the names individuals as a reference)					
	Name	Title/Position	Organization	Telephone	Email
Owner					
Designer					
Construction Manager					

Project Owner			Project Name		
General Description of Project					
Project Cost			Date Project Completed		
Key Project Personnel	Project Manager	Project Superintendent	Safety Manager	Quality Control Manager	
Name					
Reference Contact Information (listing names indicates approval to contacting the names individuals as a reference)					
	Name	Title/Position	Organization	Telephone	Email
Owner					
Designer					
Construction Manager					

Project Owner			Project Name		
General Description of Project					
Project Cost			Date Project Completed		
Key Project Personnel	Project Manager	Project Superintendent	Safety Manager	Quality Control Manager	
Name					
Reference Contact Information (listing names indicates approval to contacting the names individuals as a reference)					
	Name	Title/Position	Organization	Telephone	Email
Owner					
Designer					
Construction Manager					

Copyright© 2018 National Society of Professional Engineers, American Council of Engineering Companies, and American Society of Civil Engineers. All rights reserved.

Schedule B—Previous Experience with Similar Projects

Name of Organization				
Project Owner		Project Name		
General Description of Project				
Project Cost		Date Project Completed		
Key Project Personnel	Project Manager	Project Superintendent	Safety Manager	Quality Control Manager
Name				

Reference Contact Information (listing names indicates approval to contacting the names individuals as a reference)

	Name	Title/Position	Organization	Telephone	Email
Owner					
Designer					
Construction Manager					

Project Owner		Project Name		
General Description of Project				
Project Cost		Date Project Completed		
Key Project Personnel	Project Manager	Project Superintendent	Safety Manager	Quality Control Manager
Name				

Reference Contact Information (listing names indicates approval to contacting the names individuals as a reference)

	Name	Title/Position	Organization	Telephone	Email
Owner					
Designer					
Construction Manager					

Project Owner		Project Name		
General Description of Project				
Project Cost		Date Project Completed		
Key Project Personnel	Project Manager	Project Superintendent	Safety Manager	Quality Control Manager
Name				

Reference Contact Information (listing names indicates approval to contacting the names individuals as a reference)

	Name	Title/Position	Organization	Telephone	Email
Owner					
Designer					
Construction Manager					

Copyright© 2018 National Society of Professional Engineers, American Council of Engineering Companies, and American Society of Civil Engineers. All rights reserved.

Schedule C—Key Individuals

Project Manager			
Name of individual			
Years of experience as project manager			
Years of experience with this organization			
Number of similar projects as project manager			
Number of similar projects in other positions			
Current Project Assignments			
Name of assignment		Percent of time used for this project	Estimated project completion date
Reference Contact Information (listing names indicates approval to contact named individuals as a reference)			
Name		Name	
Title/Position		Title/Position	
Organization		Organization	
Telephone		Telephone	
Email		Email	
Project		Project	
Candidate's role on project		Candidate's role on project	

Project Superintendent			
Name of individual			
Years of experience as project superintendent			
Years of experience with this organization			
Number of similar projects as project superintendent			
Number of similar projects in other positions			
Current Project Assignments			
Name of assignment		Percent of time used for this project	Estimated project completion date
Reference Contact Information (listing names indicates approval to contact named individuals as a reference)			
Name		Name	
Title/Position		Title/Position	
Organization		Organization	
Telephone		Telephone	
Email		Email	
Project		Project	
Candidate's role on project		Candidate's role on project	

Copyright© 2018 National Society of Professional Engineers, American Council of Engineering Companies, and American Society of Civil Engineers. All rights reserved.

Safety Manager			
Name of individual			
Years of experience as project manager			
Years of experience with this organization			
Number of similar projects as project manager			
Number of similar projects in other positions			
Current Project Assignments			
Name of assignment		Percent of time used for this project	Estimated project completion date
Reference Contact Information (listing names indicates approval to contact named individuals as a reference)			
Name		Name	
Title/Position		Title/Position	
Organization		Organization	
Telephone		Telephone	
Email		Email	
Project		Project	
Candidate's role on project		Candidate's role on project	
Quality Control Manager			
Name of individual			
Years of experience as project superintendent			
Years of experience with this organization			
Number of similar projects as project superintendent			
Number of similar projects in other positions			
Current Project Assignments			
Name of assignment		Percent of time used for this project	Estimated project completion date
Reference Contact Information (listing names indicates approval to contact named individuals as a reference)			
Name		Name	
Title/Position		Title/Position	
Organization		Organization	
Telephone		Telephone	
Email		Email	
Project		Project	
Candidate's role on project		Candidate's role on project	

Copyright© 2018 National Society of Professional Engineers, American Council of Engineering Companies, and American Society of Civil Engineers. All rights reserved.

00510

Notice of Award

NOTICE OF AWARD

Date of Issuance:

Owner:	Town of Chandler	Owner's Project No.:	N/A
Engineer:	Egis BLN USA, Inc.	Engineer's Project No.:	240050

Project: Chandler 1.5 Million Gallon Water Tower

Contract Name: All Work

Bidder:

Bidder's Address:

You are notified that Owner has accepted your Bid dated **[date]** for the above Contract, and that you are the Successful Bidder and are awarded a Contract for:

Chandler 1.5 Million Gallon Water Tower

The Contract Price of the awarded Contract is $**[Contract Price]**. Contract Price is subject to adjustment based on the provisions of the Contract, including but not limited to those governing changes, Unit Price Work, and Work performed on a cost-plus-fee basis, as applicable.

Two (2) unexecuted counterparts of the Agreement accompany this Notice of Award, and one (1) copy of the Contract Documents accompanies this Notice of Award, or has been transmitted or made available to Bidder electronically.

You must comply with the following conditions precedent within 15 days of the date of receipt of this Notice of Award:

1. Deliver to Owner two (2) counterparts of the Agreement, signed by Bidder (as Contractor).
2. Deliver with the signed Agreement(s) the Contract security (such as required performance and payment bonds) and insurance documentation, as specified in the Instructions to Bidders and in the General Conditions, Articles 2 and 6.
3. Other conditions precedent (if any): **None**

Failure to comply with these conditions within the time specified will entitle Owner to consider you in default, annul this Notice of Award, and declare your Bid security forfeited.

Within 10 days after you comply with the above conditions, Owner will return to you one fully signed counterpart of the Agreement, together with any additional copies of the Contract Documents as indicated in Paragraph 2.02 of the General Conditions.

Owner: **Town of Chandler**

By *(signature)*: _____

Name *(printed)*: Tonya Wester

Title: Town Council President

Copy: Engineer

Copyright© 2018 National Society of Professional Engineers, American Council of Engineering Companies, and American Society of Civil Engineers. All rights reserved.

00520

Agreement Between Owner and Contractor

AGREEMENT BETWEEN OWNER AND CONTRACTOR FOR CONSTRUCTION CONTRACT (STIPULATED PRICE)

This Agreement is by and between **Town of Chandler** ("Owner") and **[name of contracting entity]** ("Contractor").

Terms used in this Agreement have the meanings stated in the General Conditions and the Supplementary Conditions.

Owner and Contractor hereby agree as follows:

ARTICLE 1—WORK

1.01 Contractor shall complete all Work as specified or indicated in the Contract Documents. The Work is generally described as follows:

This project includes the construction of a new 1.5 million gallon composite elevated water tower at a site located near the intersection of Fuquay Road and State Route 261. This project also includes the water main, valves and other appurtenances, controls, tank control valve, electrical connections, water fill station, drainage, pavement, and site fencing as specified. Supplemental to this New Paradise tower, a tank control valve will need to be installed offsite to control flows for the existing Plank tower. Lastly, this project will include the demolition and removal of the existing Paradise water tower adjacent to the new tower site as well as the demolition and removal of the offsite Frame standpipe. The demolition will include the disconnection of any and all utility services as necessary.

ARTICLE 2—THE PROJECT

2.01 The Project, of which the Work under the Contract Documents is a part, is generally described as follows: **Chandler 1.5 Million Gallon Water Tower**

ARTICLE 3—ENGINEER

3.01 The Owner has retained Egis BLN USA, Inc. ("Engineer") to act as Owner's representative, assume all duties and responsibilities of Engineer, and have the rights and authority assigned to Engineer in the Contract.

3.02 The part of the Project that pertains to the Work has been designed by Egis BLN USA, Inc.

ARTICLE 4—CONTRACT TIMES

4.01 *Time is of the Essence*

A. All time limits for Milestones, if any, Substantial Completion, and completion and readiness for final payment as stated in the Contract Documents are of the essence of the Contract.

**EJCDC® C-520, Agreement between Owner and Contractor for Construction Contract (Stipulated Price).
Copyright© 2018 National Society of Professional Engineers, American Council of Engineering Companies, and American Society of Civil Engineers. All rights reserved.**

4.02 *Contract Times: Dates*

A. The Work will be substantially complete on or before **June 1st, 2028**, and completed and ready for final payment in accordance with Paragraph 15.06 of the General Conditions on or before **August 1st, 2028.**

4.03 ~~*Contract Times: Days*~~

~~A. The Work will be substantially complete within **[number]** days after the date when the Contract Times commence to run as provided in Paragraph 4.01 of the General Conditions, and completed and ready for final payment in accordance with Paragraph 15.06 of the General Conditions within **[number]** days after the date when the Contract Times commence to run.~~

4.05 *Liquidated Damages*

A. Contractor and Owner recognize that time is of the essence as stated in Paragraph 4.01 above and that Owner will suffer financial and other losses if the Work is not completed and Milestones not achieved within the Contract Times, as duly modified. The parties also recognize the delays, expense, and difficulties involved in proving, in a legal or arbitration proceeding, the actual loss suffered by Owner if the Work is not completed on time. Accordingly, instead of requiring any such proof, Owner and Contractor agree that as liquidated damages for delay (but not as a penalty):

1. *Substantial Completion:* Contractor shall pay Owner $1,200 for each day that expires after the time (as duly adjusted pursuant to the Contract) specified above for Substantial Completion, until the Work is substantially complete.

2. *Completion of Remaining Work:* After Substantial Completion, if Contractor shall neglect, refuse, or fail to complete the remaining Work within the Contract Times (as duly adjusted pursuant to the Contract) for completion and readiness for final payment, Contractor shall pay Owner $600 for each day that expires after such time until the Work is completed and ready for final payment.

4. Liquidated damages for failing to timely attain Substantial Completion and final completion are not additive, and will not be imposed concurrently.

B. If Owner recovers liquidated damages for a delay in completion by Contractor, then such liquidated damages are Owner's sole and exclusive remedy for such delay, and Owner is precluded from recovering any other damages, whether actual, direct, excess, or consequential, for such delay, except for special damages (if any) specified in this Agreement.

ARTICLE 5—CONTRACT PRICE

5.01 Owner shall pay Contractor for completion of the Work in accordance with the Contract Documents, the amounts that follow, subject to adjustment under the Contract:

A. For all Work, at the prices stated in Contractor's Bid, attached hereto as an exhibit.

Copyright© 2018 National Society of Professional Engineers, American Council of Engineering Companies, and American Society of Civil Engineers. All rights reserved.

ARTICLE 6—PAYMENT PROCEDURES

6.01 *Submittal and Processing of Payments*

A. Contractor shall submit Applications for Payment in accordance with Article 15 of the General Conditions. Applications for Payment will be processed by Engineer as provided in the General Conditions.

6.02 *Progress Payments; Retainage*

A. Owner shall make progress payments on the basis of Contractor's Applications for Payment during performance of the Work as provided in Paragraph 6.02.A.1 below, provided that such Applications for Payment have been submitted in a timely manner and otherwise meet the requirements of the Contract. All such payments will be measured by the Schedule of Values established as provided in the General Conditions (and in the case of Unit Price Work based on the number of units completed) or, in the event there is no Schedule of Values, as provided elsewhere in the Contract.

1. Prior to Substantial Completion, progress payments will be made in an amount equal to the percentage indicated below but, in each case, less the aggregate of payments previously made and less such amounts as Owner may withhold, including but not limited to liquidated damages, in accordance with the Contract.

a. 90 percent of the value of the Work completed (with the balance being retainage).

1) If 50 percent or more of the Work has been completed, as determined by Engineer, and if the character and progress of the Work have been satisfactory to Owner and Engineer, then as long as the character and progress of the Work remain satisfactory to Owner and Engineer, there will be no additional retainage; and

b. 90 percent of cost of materials and equipment not incorporated in the Work (with the balance being retainage).

B. Upon Substantial Completion, Owner shall pay an amount sufficient to increase total payments to Contractor to 100 percent of the Work completed, less such amounts set off by Owner pursuant to Paragraph 15.01.E of the General Conditions, and less 200 percent of Engineer's estimate of the value of Work to be completed or corrected as shown on the punch list of items to be completed or corrected prior to final payment.

6.03 *Final Payment*

A. Upon final completion and acceptance of the Work, Owner shall pay the remainder of the Contract Price in accordance with Paragraph 15.06 of the General Conditions.

6.04 *Consent of Surety*

A. Owner will not make final payment, or return or release retainage at Substantial Completion or any other time, unless Contractor submits written consent of the surety to such payment, return, or release.

Copyright© 2018 National Society of Professional Engineers, American Council of Engineering Companies, and American Society of Civil Engineers. All rights reserved.

6.05 *Interest*

A. All amounts not paid when due will bear interest at the rate of 0 percent per annum.

ARTICLE 7—CONTRACT DOCUMENTS

7.01 *Contents*

A. The Contract Documents consist of all of the following:

1. This Agreement.
2. Bonds:
    a. Performance bond (together with power of attorney).
    b. Payment bond (together with power of attorney).
3. General Conditions.
4. Supplementary Conditions.
5. Specifications as listed in the table of contents of the project manual (copy of list attached).
6. Drawings (not attached but incorporated by reference) consisting of **[number]** sheets with each sheet bearing the following general title: **Chandler 1.5 Million Gallon Water Tower**.
8. Addenda (numbers **[number]** to **[number]**, inclusive).
9. Exhibits to this Agreement (enumerated as follows):
    a. **[list exhibits]**
10. The following which may be delivered or issued on or after the Effective Date of the Contract and are not attached hereto:
    a. Notice to Proceed.
    b. Work Change Directives.
    c. Change Orders.
    d. Field Orders.
    e. Warranty Bond, if any.

B. The Contract Documents listed in Paragraph 7.01.A are attached to this Agreement (except as expressly noted otherwise above).

C. There are no Contract Documents other than those listed above in this Article 7.

D. The Contract Documents may only be amended, modified, or supplemented as provided in the Contract.

Copyright© 2018 National Society of Professional Engineers, American Council of Engineering Companies, and American Society of Civil Engineers. All rights reserved.

ARTICLE 8—REPRESENTATIONS, CERTIFICATIONS, AND STIPULATIONS

8.01 *Contractor's Representations*

A. In order to induce Owner to enter into this Contract, Contractor makes the following representations:

1. Contractor has examined and carefully studied the Contract Documents, including Addenda.

2. Contractor has visited the Site, conducted a thorough visual examination of the Site and adjacent areas, and become familiar with the general, local, and Site conditions that may affect cost, progress, and performance of the Work.

3. Contractor is familiar with all Laws and Regulations that may affect cost, progress, and performance of the Work.

4. Contractor has carefully studied the reports of explorations and tests of subsurface conditions at or adjacent to the Site and the drawings of physical conditions relating to existing surface or subsurface structures at the Site that have been identified in the Supplementary Conditions, with respect to the Technical Data in such reports and drawings.

5. Contractor has carefully studied the reports and drawings relating to Hazardous Environmental Conditions, if any, at or adjacent to the Site that have been identified in the Supplementary Conditions, with respect to Technical Data in such reports and drawings.

6. Contractor has considered the information known to Contractor itself; information commonly known to contractors doing business in the locality of the Site; information and observations obtained from visits to the Site; the Contract Documents; and the Technical Data identified in the Supplementary Conditions or by definition, with respect to the effect of such information, observations, and Technical Data on (a) the cost, progress, and performance of the Work; (b) the means, methods, techniques, sequences, and procedures of construction to be employed by Contractor; and (c) Contractor's safety precautions and programs.

7. Based on the information and observations referred to in the preceding paragraph, Contractor agrees that no further examinations, investigations, explorations, tests, studies, or data are necessary for the performance of the Work at the Contract Price, within the Contract Times, and in accordance with the other terms and conditions of the Contract.

8. Contractor is aware of the general nature of work to be performed by Owner and others at the Site that relates to the Work as indicated in the Contract Documents.

9. Contractor has given Engineer written notice of all conflicts, errors, ambiguities, or discrepancies that Contractor has discovered in the Contract Documents, and of discrepancies between Site conditions and the Contract Documents, and the written resolution thereof by Engineer is acceptable to Contractor.

Copyright© 2018 National Society of Professional Engineers, American Council of Engineering Companies, and American Society of Civil Engineers. All rights reserved.

10. The Contract Documents are generally sufficient to indicate and convey understanding of all terms and conditions for performance and furnishing of the Work.

11. Contractor's entry into this Contract constitutes an incontrovertible representation by Contractor that without exception all prices in the Agreement are premised upon performing and furnishing the Work required by the Contract Documents.

8.02 *Contractor's Certifications*

A. Contractor certifies that it has not engaged in corrupt, fraudulent, collusive, or coercive practices in competing for or in executing the Contract. For the purposes of this Paragraph 8.02:

1. "corrupt practice" means the offering, giving, receiving, or soliciting of anything of value likely to influence the action of a public official in the bidding process or in the Contract execution;

2. "fraudulent practice" means an intentional misrepresentation of facts made (a) to influence the bidding process or the execution of the Contract to the detriment of Owner, (b) to establish Bid or Contract prices at artificial non-competitive levels, or (c) to deprive Owner of the benefits of free and open competition;

3. "collusive practice" means a scheme or arrangement between two or more Bidders, with or without the knowledge of Owner, a purpose of which is to establish Bid prices at artificial, non-competitive levels; and

4. "coercive practice" means harming or threatening to harm, directly or indirectly, persons or their property to influence their participation in the bidding process or affect the execution of the Contract.

8.03 *Standard General Conditions*

A. Owner stipulates that if the General Conditions that are made a part of this Contract are EJCDC® C-700, Standard General Conditions for the Construction Contract (2018), published by the Engineers Joint Contract Documents Committee, and if Owner is the party that has furnished said General Conditions, then Owner has plainly shown all modifications to the standard wording of such published document to the Contractor, through a process such as highlighting or "track changes" (redline/strikeout), or in the Supplementary Conditions.

Copyright© 2018 National Society of Professional Engineers, American Council of Engineering Companies, and American Society of Civil Engineers. All rights reserved.

IN WITNESS WHEREOF, Owner and Contractor have signed this Agreement.

This Agreement will be effective on _____ (which is the Effective Date of the Contract).

Owner:	Contractor:
_____ *(typed or printed name of organization)*	_____ *(typed or printed name of organization)*
By: _____ *(individual's signature)*	By: _____ *(individual's signature)*
Date: _____ *(date signed)*	Date: _____ *(date signed)*
Name: _____ *(typed or printed)*	Name: _____ *(typed or printed)*
Title: _____ *(typed or printed)*	Title: _____ *(typed or printed)*
	*(If **[Type of Entity]** is a corporation, a partnership, or a joint venture, attach evidence of authority to sign.)*
Attest: _____ *(individual's signature)*	Attest: _____ *(individual's signature)*
Title: _____ *(typed or printed)*	Title: _____ *(typed or printed)*
Address for giving notices:	Address for giving notices:
_____	_____
_____	_____
_____	_____
Designated Representative:	Designated Representative:
Name: _____ *(typed or printed)*	Name: _____ *(typed or printed)*
Title: _____ *(typed or printed)*	Title: _____ *(typed or printed)*
Address:	Address:
_____	_____
_____	_____
_____	_____
Phone: _____	Phone: _____
Email: _____	Email: _____
*(If **[Type of Entity]** is a corporation, attach evidence of authority to sign. If **[Type of Entity]** is a public body, attach evidence of authority to sign and resolution or other documents authorizing execution of this Agreement.)*	License No.: _____ *(where applicable)*
	State: _____

EJCDC® C-520, Agreement between Owner and Contractor for Construction Contract (Stipulated Price).
Copyright© 2018 National Society of Professional Engineers, American Council of Engineering Companies, and American Society of Civil Engineers. All rights reserved.

00550

Notice to Proceed

NOTICE TO PROCEED

Owner:	Town of Chandler	Owner's Project No.:	N/A
Engineer:	Egis BLN USA, Inc.	Engineer's Project No.:	240050
Contractor:		Contractor's Project No.:	
Project:	Chandler 1.5 Million Gallon Water Tower		
Contract Name:	All Work		
Effective Date of Contract:			

Owner hereby notifies Contractor that the Contract Times under the above Contract will commence to run on **_____** pursuant to Paragraph 4.01 of the General Conditions.

On that date, Contractor shall start performing its obligations under the Contract Documents. No Work will be done at the Site prior to such date.

In accordance with the Agreement:

The date by which Substantial Completion must be achieved is **June 1st, 2028**, and the date by which readiness for final payment must be achieved is **August 1st, 2028.**

Before starting any Work at the Site, Contractor must comply with the following:

There are no known access limitations, security procedures, or other restrictions.

Owner:	**Town of Chandler**
By *(signature)*:	
Name *(printed)*:	Tonya Wester
Title:	Town Council President
Date Issued:	

Copy: Engineer

Copyright© 2018 National Society of Professional Engineers, American Council of Engineering Companies, and American Society of Civil Engineers. All rights reserved.

00570

Escrow Agreement

ESCROW AGREEMENT

THIS ESCROW AGREEMENT made and entered into this ___ day of _____, 20 by and between _____ hereinafter called the Escrow Agent, _____hereinafter called the Owner, and hereinafter called the Contractor.

WHEREAS, the Owner and the Contractor entered into a contract dated _____, providing for the construction by the Contractor of the _____ _____for the Owner, subject to the provisions of IC 36-1-12-14, and

WHEREAS, said construction contract provides that portions of payments by the Owner to the Contractor shall be retained by the Owner (herein called Retainage), and

WHEREAS, all funded retainage shall be deposited in an Escrow Account.

NOW, THEREFORE, it is agreed as follows:

1. The Owner will hereafter deliver or cause to be delivered to the Escrow Agent that portion of the Retainage to be placed in escrow, to be held in escrow in accordance with the terms of this Agreement.

2. The Escrow Agent will promptly invest this Retainage in such obligations as selected by the Escrow Agent at its discretion. All income earned on such funds shall be added to and become a part of the escrowed principal.

3. The Escrow Agent shall pay over the net sum held by it hereunder as follows:

    a. In the manner directed by the joint written authorization of the Owner and Contractor.

    b. In the absence of such a joint written authorization, upon receipt from the Owner of a written notice pursuant to Article 18 of the General Conditions showing that the Owner has terminated the employment of the Contractor, then the Escrow Agent shall pay over to the Owner the net sum held by it hereunder.

    c. In the absence of such a joint written authorization and in the absence of the termination of the employment of the Contractor as provided in b., above, in the manner directed by a certified copy

of a judgment of a court of record establishing the rights of the parties to said funds.

4. This Escrow Agreement shall constitute the direction from the Owner and Contractor to the Escrow Agent of the manner in which the Retainage is to be paid by the Escrow Agent, pursuant to IC 36-1-12-14.

5. The Escrow Agent shall deduct, before any payment from the amounts received hereunder, its fee as Escrow Agent, which fee shall be payable from the income earned by the retainage and which escrow fee shall in no event exceed fifty percent (50%) of said income earned.

6. This Agreement and anything done or performed hereunder by either the Contractor or Owner shall not be constructed to prejudice or limit the claims which either party may have against the other arising out of the aforementioned construction agreement.

7. This instrument constitutes the entire Agreement between the parties regarding duties of the Escrow Agent with respect to the investment and payment of escrow funds; the Escrow Agent is not liable to the Owner and Contractor for any loss or damages other than by its own negligence or willful misconduct.

_____

(Owner)

By:_____

_____

(Contractor)

By:_____

_____

(Escrow Agent)

By:_____

00610

Performance Bond

PERFORMANCE BOND

Contractor	**Surety**
Name:	Name:
Address *(principal place of business)*:	Address *(principal place of business)*:
Owner	**Contract**
Name: **Chandler Utilities**	Description *(name and location)*:
Mailing address *(principal place of business)*:	**Chandler 1.5 Million Gallon Water Tower** **2855 IN-261** **Newburgh, IN 47630**
Town of Chandler **401 E. Lincoln Ave.** **Chandler, IN 47610**	Contract Price:
	Effective Date of Contract:

Bond

Bond Amount:

Date of Bond:

(Date of Bond cannot be earlier than Effective Date of Contract)

Modifications to this Bond form:

☐ None ☐ See Paragraph 16

Surety and Contractor, intending to be legally bound hereby, subject to the terms set forth in this Performance Bond, do each cause this Performance Bond to be duly executed by an authorized officer, agent, or representative.

Contractor as Principal	Surety
_____	_____
(Full formal name of Contractor)	*(Full formal name of Surety) (corporate seal)*
By: _____	By: _____
(Signature)	*(Signature)(Attach Power of Attorney)*
Name: _____	Name: _____
(Printed or typed)	*(Printed or typed)*
Title: _____	Title: _____
Attest: _____	Attest: _____
(Signature)	*(Signature)*
Name: _____	Name: _____
(Printed or typed)	*(Printed or typed)*
Title: _____	Title: _____

Notes: (1) Provide supplemental execution by any additional parties, such as joint venturers. (2) Any singular reference to Contractor, Surety, Owner, or other party is considered plural where applicable.

Copyright© 2018 National Society of Professional Engineers, American Council of Engineering Companies, and American Society of Civil Engineers. All rights reserved.

1. The Contractor and Surety, jointly and severally, bind themselves, their heirs, executors, administrators, successors, and assigns to the Owner for the performance of the Construction Contract, which is incorporated herein by reference.

2. If the Contractor performs the Construction Contract, the Surety and the Contractor shall have no obligation under this Bond, except when applicable to participate in a conference as provided in Paragraph 3.

3. If there is no Owner Default under the Construction Contract, the Surety's obligation under this Bond will arise after:

   3.1. The Owner first provides notice to the Contractor and the Surety that the Owner is considering declaring a Contractor Default. Such notice may indicate whether the Owner is requesting a conference among the Owner, Contractor, and Surety to discuss the Contractor's performance. If the Owner does not request a conference, the Surety may, within five (5) business days after receipt of the Owner's notice, request such a conference. If the Surety timely requests a conference, the Owner shall attend. Unless the Owner agrees otherwise, any conference requested under this Paragraph 3.1 will be held within ten (10) business days of the Surety's receipt of the Owner's notice. If the Owner, the Contractor, and the Surety agree, the Contractor shall be allowed a reasonable time to perform the Construction Contract, but such an agreement does not waive the Owner's right, if any, subsequently to declare a Contractor Default;

   3.2. The Owner declares a Contractor Default, terminates the Construction Contract and notifies the Surety; and

   3.3. The Owner has agreed to pay the Balance of the Contract Price in accordance with the terms of the Construction Contract to the Surety or to a contractor selected to perform the Construction Contract.

4. Failure on the part of the Owner to comply with the notice requirement in Paragraph 3.1 does not constitute a failure to comply with a condition precedent to the Surety's obligations, or release the Surety from its obligations, except to the extent the Surety demonstrates actual prejudice.

5. When the Owner has satisfied the conditions of Paragraph 3, the Surety shall promptly and at the Surety's expense take one of the following actions:

   5.1. Arrange for the Contractor, with the consent of the Owner, to perform and complete the Construction Contract;

   5.2. Undertake to perform and complete the Construction Contract itself, through its agents or independent contractors;

   5.3. Obtain bids or negotiated proposals from qualified contractors acceptable to the Owner for a contract for performance and completion of the Construction Contract, arrange for a contract to be prepared for execution by the Owner and a contractor selected with the Owners concurrence, to be secured with performance and payment bonds executed by a qualified surety equivalent to the bonds issued on the Construction Contract, and pay to the Owner the amount of damages as described in Paragraph 7 in

Copyright© 2018 National Society of Professional Engineers, American Council of Engineering Companies, and American Society of Civil Engineers. All rights reserved.

excess of the Balance of the Contract Price incurred by the Owner as a result of the Contractor Default; or

5.4. Waive its right to perform and complete, arrange for completion, or obtain a new contractor, and with reasonable promptness under the circumstances:

5.4.1 After investigation, determine the amount for which it may be liable to the Owner and, as soon as practicable after the amount is determined, make payment to the Owner; or

5.4.2 Deny liability in whole or in part and notify the Owner, citing the reasons for denial.

6. If the Surety does not proceed as provided in Paragraph 5 with reasonable promptness, the Surety shall be deemed to be in default on this Bond seven days after receipt of an additional written notice from the Owner to the Surety demanding that the Surety perform its obligations under this Bond, and the Owner shall be entitled to enforce any remedy available to the Owner. If the Surety proceeds as provided in Paragraph 5.4, and the Owner refuses the payment, or the Surety has denied liability, in whole or in part, without further notice, the Owner shall be entitled to enforce any remedy available to the Owner.

7. If the Surety elects to act under Paragraph 5.1, 5.2, or 5.3, then the responsibilities of the Surety to the Owner will not be greater than those of the Contractor under the Construction Contract, and the responsibilities of the Owner to the Surety will not be greater than those of the Owner under the Construction Contract. Subject to the commitment by the Owner to pay the Balance of the Contract Price, the Surety is obligated, without duplication for:

7.1. the responsibilities of the Contractor for correction of defective work and completion of the Construction Contract;

7.2. additional legal, design professional, and delay costs resulting from the Contractor's Default, and resulting from the actions or failure to act of the Surety under Paragraph 5; and

7.3. liquidated damages, or if no liquidated damages are specified in the Construction Contract, actual damages caused by delayed performance or non-performance of the Contractor.

8. If the Surety elects to act under Paragraph 5.1, 5.3, or 5.4, the Surety's liability is limited to the amount of this Bond.

9. The Surety shall not be liable to the Owner or others for obligations of the Contractor that are unrelated to the Construction Contract, and the Balance of the Contract Price will not be reduced or set off on account of any such unrelated obligations. No right of action will accrue on this Bond to any person or entity other than the Owner or its heirs, executors, administrators, successors, and assigns.

10. The Surety hereby waives notice of any change, including changes of time, to the Construction Contract or to related subcontracts, purchase orders, and other obligations.

11. Any proceeding, legal or equitable, under this Bond must be instituted in any court of competent jurisdiction in the location in which the work or part of the work is located and must be instituted within two years after a declaration of Contractor Default or within two years after the Contractor ceased working or within two years after the Surety refuses or

Copyright© 2018 National Society of Professional Engineers, American Council of Engineering Companies, and American Society of Civil Engineers. All rights reserved.

fails to perform its obligations under this Bond, whichever occurs first. If the provisions of this paragraph are void or prohibited by law, the minimum periods of limitations available to sureties as a defense in the jurisdiction of the suit will be applicable.

12. Notice to the Surety, the Owner, or the Contractor must be mailed or delivered to the address shown on the page on which their signature appears.

13. When this Bond has been furnished to comply with a statutory or other legal requirement in the location where the construction was to be performed, any provision in this Bond conflicting with said statutory or legal requirement will be deemed deleted therefrom and provisions conforming to such statutory or other legal requirement will be deemed incorporated herein. When so furnished, the intent is that this Bond will be construed as a statutory bond and not as a common law bond.

14. Definitions

    14.1. *Balance of the Contract Price*—The total amount payable by the Owner to the Contractor under the Construction Contract after all proper adjustments have been made including allowance for the Contractor for any amounts received or to be received by the Owner in settlement of insurance or other claims for damages to which the Contractor is entitled, reduced by all valid and proper payments made to or on behalf of the Contractor under the Construction Contract.

    14.2. *Construction Contract*—The agreement between the Owner and Contractor identified on the cover page, including all Contract Documents and changes made to the agreement and the Contract Documents.

    14.3. *Contractor Default*—Failure of the Contractor, which has not been remedied or waived, to perform or otherwise to comply with a material term of the Construction Contract.

    14.4. *Owner Default*—Failure of the Owner, which has not been remedied or waived, to pay the Contractor as required under the Construction Contract or to perform and complete or comply with the other material terms of the Construction Contract.

    14.5. *Contract Documents*—All the documents that comprise the agreement between the Owner and Contractor.

15. If this Bond is issued for an agreement between a contractor and subcontractor, the term Contractor in this Bond will be deemed to be Subcontractor and the term Owner will be deemed to be Contractor.

16. Modifications to this Bond are as follows: **None.**

Copyright© 2018 National Society of Professional Engineers, American Council of Engineering Companies, and American Society of Civil Engineers. All rights reserved.

00615

Payment Bond

PAYMENT BOND

Contractor	**Surety**
Name:	Name:
Address *(principal place of business)*:	Address *(principal place of business)*:
Owner	**Contract**
Name: **Chandler Utilities**	Description *(name and location)*: **Chandler 1.5 Million Gallon Water Tower 2855 IN-261 Newburgh, IN 47630**
Mailing address *(principal place of business)*: **Town of Chandler 401 E. Lincoln Ave. Chandler, IN 47610**	Contract Price:
	Effective Date of Contract:

Bond

Bond Amount:

Date of Bond:

(Date of Bond cannot be earlier than Effective Date of Contract)

Modifications to this Bond form:

☐ None ☐ See Paragraph 18

Surety and Contractor, intending to be legally bound hereby, subject to the terms set forth in this Payment Bond, do each cause this Payment Bond to be duly executed by an authorized officer, agent, or representative.

Contractor as Principal	Surety
_____	_____
(Full formal name of Contractor)	*(Full formal name of Surety) (corporate seal)*
By: _____	By: _____
(Signature)	*(Signature)(Attach Power of Attorney)*
Name: _____	Name: _____
(Printed or typed)	*(Printed or typed)*
Title: _____	Title: _____
Attest: _____	Attest: _____
(Signature)	*(Signature)*
Name: _____	Name: _____
(Printed or typed)	*(Printed or typed)*
Title: _____	Title: _____

Notes: (1) Provide supplemental execution by any additional parties, such as joint venturers. (2) Any singular reference to Contractor, Surety, Owner, or other party is considered plural where applicable.

Copyright© 2018 National Society of Professional Engineers, American Council of Engineering Companies, and American Society of Civil Engineers. All rights reserved.

1. The Contractor and Surety, jointly and severally, bind themselves, their heirs, executors, administrators, successors, and assigns to the Owner to pay for labor, materials, and equipment furnished for use in the performance of the Construction Contract, which is incorporated herein by reference, subject to the following terms.

2. If the Contractor promptly makes payment of all sums due to Claimants, and defends, indemnifies, and holds harmless the Owner from claims, demands, liens, or suits by any person or entity seeking payment for labor, materials, or equipment furnished for use in the performance of the Construction Contract, then the Surety and the Contractor shall have no obligation under this Bond.

3. If there is no Owner Default under the Construction Contract, the Surety's obligation to the Owner under this Bond will arise after the Owner has promptly notified the Contractor and the Surety (at the address described in Paragraph 13) of claims, demands, liens, or suits against the Owner or the Owner's property by any person or entity seeking payment for labor, materials, or equipment furnished for use in the performance of the Construction Contract, and tendered defense of such claims, demands, liens, or suits to the Contractor and the Surety.

4. When the Owner has satisfied the conditions in Paragraph 3, the Surety shall promptly and at the Surety's expense defend, indemnify, and hold harmless the Owner against a duly tendered claim, demand, lien, or suit.

5. The Surety's obligations to a Claimant under this Bond will arise after the following:

    5.1. Claimants who do not have a direct contract with the Contractor

        5.1.1. have furnished a written notice of non-payment to the Contractor, stating with substantial accuracy the amount claimed and the name of the party to whom the materials were, or equipment was, furnished or supplied or for whom the labor was done or performed, within ninety (90) days after having last performed labor or last furnished materials or equipment included in the Claim; and

        5.1.2. have sent a Claim to the Surety (at the address described in Paragraph 13).

    5.2. Claimants who are employed by or have a direct contract with the Contractor have sent a Claim to the Surety (at the address described in Paragraph 13).

6. If a notice of non-payment required by Paragraph 5.1.1 is given by the Owner to the Contractor, that is sufficient to satisfy a Claimant's obligation to furnish a written notice of non-payment under Paragraph 5.1.1.

7. When a Claimant has satisfied the conditions of Paragraph 5.1 or 5.2, whichever is applicable, the Surety shall promptly and at the Surety's expense take the following actions:

    7.1. Send an answer to the Claimant, with a copy to the Owner, within sixty (60) days after receipt of the Claim, stating the amounts that are undisputed and the basis for challenging any amounts that are disputed; and

    7.2. Pay or arrange for payment of any undisputed amounts.

Copyright© 2018 National Society of Professional Engineers, American Council of Engineering Companies, and American Society of Civil Engineers. All rights reserved.

7.3. The Surety's failure to discharge its obligations under Paragraph 7.1 or 7.2 will not be deemed to constitute a waiver of defenses the Surety or Contractor may have or acquire as to a Claim, except as to undisputed amounts for which the Surety and Claimant have reached agreement. If, however, the Surety fails to discharge its obligations under Paragraph 7.1 or 7.2, the Surety shall indemnify the Claimant for the reasonable attorney's fees the Claimant incurs thereafter to recover any sums found to be due and owing to the Claimant.

8. The Surety's total obligation will not exceed the amount of this Bond, plus the amount of reasonable attorney's fees provided under Paragraph 7.3, and the amount of this Bond will be credited for any payments made in good faith by the Surety.

9. Amounts owed by the Owner to the Contractor under the Construction Contract will be used for the performance of the Construction Contract and to satisfy claims, if any, under any construction performance bond. By the Contractor furnishing and the Owner accepting this Bond, they agree that all funds earned by the Contractor in the performance of the Construction Contract are dedicated to satisfying obligations of the Contractor and Surety under this Bond, subject to the Owner's priority to use the funds for the completion of the work.

10. The Surety shall not be liable to the Owner, Claimants, or others for obligations of the Contractor that are unrelated to the Construction Contract. The Owner shall not be liable for the payment of any costs or expenses of any Claimant under this Bond, and shall have under this Bond no obligation to make payments to or give notice on behalf of Claimants, or otherwise have any obligations to Claimants under this Bond.

11. The Surety hereby waives notice of any change, including changes of time, to the Construction Contract or to related subcontracts, purchase orders, and other obligations.

12. No suit or action will be commenced by a Claimant under this Bond other than in a court of competent jurisdiction in the state in which the project that is the subject of the Construction Contract is located or after the expiration of one year from the date (1) on which the Claimant sent a Claim to the Surety pursuant to Paragraph 5.1.2 or 5.2, or (2) on which the last labor or service was performed by anyone or the last materials or equipment were furnished by anyone under the Construction Contract, whichever of (1) or (2) first occurs. If the provisions of this paragraph are void or prohibited by law, the minimum period of limitation available to sureties as a defense in the jurisdiction of the suit will be applicable.

13. Notice and Claims to the Surety, the Owner, or the Contractor must be mailed or delivered to the address shown on the page on which their signature appears. Actual receipt of notice or Claims, however accomplished, will be sufficient compliance as of the date received.

14. When this Bond has been furnished to comply with a statutory or other legal requirement in the location where the construction was to be performed, any provision in this Bond conflicting with said statutory or legal requirement will be deemed deleted here from and provisions conforming to such statutory or other legal requirement will be deemed incorporated herein. When so furnished, the intent is that this Bond will be construed as a statutory bond and not as a common law bond.

Copyright© 2018 National Society of Professional Engineers, American Council of Engineering Companies, and American Society of Civil Engineers. All rights reserved.

15. Upon requests by any person or entity appearing to be a potential beneficiary of this Bond, the Contractor and Owner shall promptly furnish a copy of this Bond or shall permit a copy to be made.

16. Definitions

    16.1. *Claim*—A written statement by the Claimant including at a minimum:

        16.1.1. The name of the Claimant;

        16.1.2. The name of the person for whom the labor was done, or materials or equipment furnished;

        16.1.3. A copy of the agreement or purchase order pursuant to which labor, materials, or equipment was furnished for use in the performance of the Construction Contract;

        16.1.4. A brief description of the labor, materials, or equipment furnished;

        16.1.5. The date on which the Claimant last performed labor or last furnished materials or equipment for use in the performance of the Construction Contract;

        16.1.6. The total amount earned by the Claimant for labor, materials, or equipment furnished as of the date of the Claim;

        16.1.7. The total amount of previous payments received by the Claimant; and

        16.1.8. The total amount due and unpaid to the Claimant for labor, materials, or equipment furnished as of the date of the Claim.

    16.2. *Claimant*—An individual or entity having a direct contract with the Contractor or with a subcontractor of the Contractor to furnish labor, materials, or equipment for use in the performance of the Construction Contract. The term Claimant also includes any individual or entity that has rightfully asserted a claim under an applicable mechanic's lien or similar statute against the real property upon which the Project is located. The intent of this Bond is to include without limitation in the terms of "labor, materials, or equipment" that part of the water, gas, power, light, heat, oil, gasoline, telephone service, or rental equipment used in the Construction Contract, architectural and engineering services required for performance of the work of the Contractor and the Contractor's subcontractors, and all other items for which a mechanic's lien may be asserted in the jurisdiction where the labor, materials, or equipment were furnished.

    16.3. *Construction Contract*—The agreement between the Owner and Contractor identified on the cover page, including all Contract Documents and all changes made to the agreement and the Contract Documents.

    16.4. *Owner Default*—Failure of the Owner, which has not been remedied or waived, to pay the Contractor as required under the Construction Contract or to perform and complete or comply with the other material terms of the Construction Contract.

    16.5. *Contract Documents*—All the documents that comprise the agreement between the Owner and Contractor.

Copyright© 2018 National Society of Professional Engineers, American Council of Engineering Companies, and American Society of Civil Engineers. All rights reserved.

17. If this Bond is issued for an agreement between a contractor and subcontractor, the term Contractor in this Bond will be deemed to be Subcontractor and the term Owner will be deemed to be Contractor.

18. Modifications to this Bond are as follows: **None.**

Copyright© 2018 National Society of Professional Engineers, American Council of Engineering Companies, and American Society of Civil Engineers. All rights reserved.

00620

Certificates of Insurance
(To be inserted upon receipt)

00622

Application for Payment

Contractor's Application for Payment

Owner:		**Owner's Project No.:**	
Engineer:		**Engineer's Project No.:**	
Contractor:		**Contractor's Project No.:**	
Project:			
Contract:			
Application No.:		**Application Date:**	
Application Period:	**From**	**to**	

1. Original Contract Price				$ -
2. Net change by Change Orders				$ -
3. Current Contract Price (Line 1 + Line 2)				$ -
4. Total Work completed and materials stored to date (Sum of Column G Lump Sum Total and Column J Unit Price Total)				$ -
5. Retainage				
a.	X	$ -	Work Completed	$ -
b.	X	$ -	Stored Materials	$ -
c. Total Retainage (Line 5.a + Line 5.b)				$ -
6. Amount eligible to date (Line 4 - Line 5.c)				$ -
7. Less previous payments (Line 6 from prior application)				
8. Amount due this application				$ -
9. Balance to finish, including retainage (Line 3 - Line 4)				$ -

Contractor's Certification

The undersigned Contractor certifies, to the best of its knowledge, the following:

(1) All previous progress payments received from Owner on account of Work done under the Contract have been applied on account to discharge Contractor's legitimate obligations incurred in connection with the Work covered by prior Applications for Payment;

(2) Title to all Work, materials and equipment incorporated in said Work, or otherwise listed in or covered by this Application for Payment, will pass to Owner at time of payment free and clear of all liens, security interests, and encumbrances (except such as are covered by a bond acceptable to Owner indemnifying Owner against any such liens, security interest, or encumbrances); and

(3) All the Work covered by this Application for Payment is in accordance with the Contract Documents and is not defective.

Contractor:

Signature: **Date:**

Recommended by Engineer		**Approved by Owner**	
By:		**By:**	
Title:		**Title:**	
Date:		**Date:**	
Approved by Funding Agency			
By:		**By:**	
Title:		**Title:**	
Date:		**Date:**	

(c) 2018 National Society of Professional Engineers for EJCDC. All rights reserved.

Progress Estimate - Lump Sum Work

Contractor's Application for Payment

Owner:		**Owner's Project No.:**	
Engineer:		**Engineer's Project No.:**	
Contractor:		**Contractor's Project No.:**	
Project:			
Contract:			

Application No.: _____ **Application Period:** From _____ to _____ **Application Date:** _____

A	B	C	D	E	F	G	H	I
			Work Completed					
Item No.	Description	Scheduled Value ($)	(D + E) From Previous Application ($)	This Period ($)	Materials Currently Stored (not in D or E) ($)	Work Completed and Materials Stored to Date (D + E + F) ($)	% of Scheduled Value (G / C) (%)	Balance to Finish (C - G) ($)
Original Contract								
			-			-		-
						-		-
						-		-
						-		-
						-		-
						-		-
						-		-
						-		-
						-		-
						-		-
						-		-
						-		-
						-		-
						-		-
						-		-
						-		-
						-		-
						-		-
						-		-
						-		-
	Original Contract Totals	$ -	$ -	$ -	$ -	$ -		$ -

(c) 2018 National Society of Professional Engineers for EJCDC. All rights reserved.

Progress Estimate - Lump Sum Work

Contractor's Application for Payment

Owner:		**Owner's Project No.:**	
Engineer:		**Engineer's Project No.:**	
Contractor:		**Contractor's Project No.:**	
Project:			
Contract:			

Application No.: _____ **Application Period:** **From** _____ **to** _____ **Application Date:** _____

A	B	C	D	E	F	G	H	I
			Work Completed					
Item No.	Description	Scheduled Value ($)	(D + E) From Previous Application ($)	This Period ($)	Materials Currently Stored (not in D or E) ($)	Work Completed and Materials Stored to Date (D + E + F) ($)	% of Scheduled Value (G / C) (%)	Balance to Finish (C - G) ($)
Change Orders								
						-		-
						-		-
						-		-
						-		-
						-		-
						-		-
						-		-
						-		-
						-		-
						-		-
						-		-
						-		-
						-		-
						-		-
						-		-
						-		-
						-		-
						-		-
						-		-
	Change Order Totals	$ -	$ -	$ -	$ -	$ -		$ -
Original Contract and Change Orders								
	Project Totals	$ -	$ -	$ -	$ -	$ -		$ -

(c) 2018 National Society of Professional Engineers for EJCDC. All rights reserved.

Progress Estimate - Unit Price Work

Contractor's Application for Payment

Owner: _____ **Owner's Project No.:** _____
Engineer: _____ **Engineer's Project No.:** _____
Contractor: _____ **Contractor's Project No.:** _____
Project: _____
Contract: _____

Application No.: _____ **Application Period:** **From** _____ **to** _____ **Application Date:** _____

A	B	C	D	E	F	G	H	I	J	K	L
		Contract Information				Work Completed					
Bid Item No.	Description	Item Quantity	Units	Unit Price ($)	Value of Bid Item (C X E) ($)	Estimated Quantity Incorporated in the Work	Value of Work Completed to Date (E X G) ($)	Materials Currently Stored (not in G) ($)	Work Completed and Materials Stored to Date (H + I) ($)	% of Value of Item (J / F) (%)	Balance to Finish (F - J) ($)
Original Contract											
					-		-		-		-
					-		-		-		-
					-		-		-		-
					-		-		-		-
					-		-		-		-
					-		-		-		-
					-		-		-		-
					-		-		-		-
					-		-		-		-
					-		-		-		-
					-		-		-		-
					-		-		-		-
					-		-		-		-
					-		-		-		-
					-		-		-		-
					-		-		-		-
					-		-		-		-
					-		-		-		-
					-		-		-		-
					-		-		-		-
					-		-		-		-
				Original Contract Totals	$ -		$ -	$ -	$ -		$ -

EJCDC C-620 Contractor's Application for Payment
(c) 2018 National Society of Professional Engineers for EJCDC. All rights reserved.

Progress Estimate - Unit Price Work

Contractor's Application for Payment

Owner: _____ **Owner's Project No.:** _____
Engineer: _____ **Engineer's Project No.:** _____
Contractor: _____ **Contractor's Project No.:** _____
Project: _____
Contract: _____

Application No.: _____ **Application Period:** **From** _____ **to** _____ **Application Date:** _____

A	B	C	D	E	F	G	H	I	J	K	L
		Contract Information				Work Completed					
Bid Item No.	Description	Item Quantity	Units	Unit Price ($)	Value of Bid Item (C X E) ($)	Estimated Quantity Incorporated in the Work	Value of Work Completed to Date (E X G) ($)	Materials Currently Stored (not in G) ($)	Work Completed and Materials Stored to Date (H + I) ($)	% of Value of Item (J / F) (%)	Balance to Finish (F - J) ($)
Change Orders											
					-		-		-		-
					-		-		-		-
					-		-		-		-
					-		-		-		-
					-		-		-		-
					-		-		-		-
					-		-		-		-
					-		-		-		-
					-		-		-		-
					-		-		-		-
					-		-		-		-
					-		-		-		-
					-		-		-		-
					-		-		-		-
					-		-		-		-
					-		-		-		-
					-		-		-		-
					-		-		-		-
					-		-		-		-
					-		-		-		-
					-		-		-		-
				Change Order Totals	$ -		$ -	$ -	$ -		$ -
Original Contract and Change Orders											
				Project Totals	$ -		$ -	$ -	$ -		$ -

EJCDC C-620 Contractor's Application for Payment
(c) 2018 National Society of Professional Engineers for EJCDC. All rights reserved.

Stored Materials Summary

Contractor's Application for Payment

Owner:		**Owner's Project No.:**	
Engineer:		**Engineer's Project No.:**	
Contractor:		**Contractor's Project No.:**	
Project:			
Contract:			

Application No.: _____ **Application Period:** **From** _____ **to** _____ **Application Date:** _____

A	B	C	D	E	F	G	H	I	J	K	L	M
						Materials Stored			Incorporated in Work			
Item No. (Lump Sum Tab) or Bid Item No. (Unit Price Tab)	Supplier Invoice No.	Submittal No. (with Specification Section No.)	Description of Materials or Equipment Stored	Storage Location	Application No. When Materials Placed in Storage	Previous Amount Stored ($)	Amount Stored this Period ($)	Amount Stored to Date (G+H) ($)	Amount Previously Incorporated in the Work ($)	Amount Incorporated in the Work this Period ($)	Total Amount Incorporated in the Work (J+K) ($)	Materials Remaining in Storage (I-L) ($)
								-			-	-
								-			-	-
								-			-	-
								-			-	-
								-			-	-
								-			-	-
								-			-	-
								-			-	-
								-			-	-
								-			-	-
								-			-	-
								-			-	-
								-			-	-
								-			-	-
								-			-	-
								-			-	-
								-			-	-
								-			-	-
								-			-	-
								-			-	-
								-			-	-
					Totals	$ -	$ -	$ -	$ -	$ -	$ -	$ -

EJCDC C-620 Contractor's Application for Payment
(c) 2018 National Society of Professional Engineers for EJCDC. All rights reserved.

00631

Change Order

CHANGE ORDER NO.:

Owner:	**Chandler Utilities**	Owner's Project No.:	**N/A**
Engineer:	**Egis BLN USA, Inc.**	Engineer's Project No.:	**240050**
Contractor:		Contractor's Project No.:	
Project:	**Chandler 1.5 Million Gallon Water Tower**		
Contract Name:	**All Work**		
Date Issued:		Effective Date of Change Order:	

The Contract is modified as follows upon execution of this Change Order:

Description:

Attachments:

Change in Contract Price	**Change in Contract Times**
Original Contract Price: $ _____	Original Contract Times: Substantial Completion: _____ Ready for final payment: _____
[Increase] [Decrease] from previously approved Change Orders No. 1 to No. **[Number of previous Change Order]**: $ _____	**[Increase] [Decrease]** from previously approved Change Orders No.1 to No. **[Number of previous Change Order]**: Substantial Completion: _____ Ready for final payment: _____
Contract Price prior to this Change Order: $ _____	Contract Times prior to this Change Order: Substantial Completion: _____ Ready for final payment: _____
[Increase] [Decrease] this Change Order: $ _____	**[Increase] [Decrease]** this Change Order: Substantial Completion: _____ Ready for final payment: _____
Contract Price incorporating this Change Order: $ _____	Contract Times with all approved Change Orders: Substantial Completion: _____ Ready for final payment: _____

	Recommended by Engineer (if required)	Authorized by Owner
By:	_____	_____
Title:	_____	_____
Date:	_____	_____

	Authorized by Owner	Approved by Funding Agency (if applicable)
By:	_____	_____
Title:	_____	_____
Date:	_____	_____

EJCDC® C-941, Change Order.
Copyright© 2018 National Society of Professional Engineers, American Council of Engineering Companies and American Society of Civil Engineers. All rights reserved.

00632

Work Change Directive

WORK CHANGE DIRECTIVE NO.:

Owner:	**Chandler Utilities**	Owner's Project No.:	**N/A**
Engineer:	**Egis BLN USA, Inc.**	Engineer's Project No.:	**240050**
Contractor:		Contractor's Project No.:	
Project:	**Chandler 1.5 Million Gallon Water Tower**		
Contract Name:	**All Work**		
Date Issued:		Effective Date of Work Change Directive:	

Contractor is directed to proceed promptly with the following change(s):

Description:

Attachments:

Purpose for the Work Change Directive:

Directive to proceed promptly with the Work described herein, prior to agreeing to change in Contract Price and Contract Time, is issued due to:

Notes to User—Check one or both of the following

☐ Non-agreement on pricing of proposed change. ☐ Necessity to proceed for schedule or other reasons.

Estimated Change in Contract Price and Contract Times (non-binding, preliminary):

Contract Price: $ _____ **[increase] [decrease] [not yet estimated]**.

Contract Time: _____ days **[increase] [decrease] [not yet estimated]**.

Basis of estimated change in Contract Price:

☐ Lump Sum ☐ Unit Price ☐ Cost of the Work ☐ Other

	Recommended by Engineer	Authorized by Owner
By:		
Title:		
Date:		

Copyright© 2018 National Society of Professional Engineers, American Council of Engineering Companies, and American Society of Civil Engineers. All rights reserved.

00633

Change Order Request Form

Advancement of Construction Technology

CHANGE ORDER REQUEST PROPOSAL

Project: _____

_____

To: _____

_____

Re: _____

Change Order Request Number: _____

From (Contractor): _____

Date: _____

A/E Project Number: _____

Contract For: _____

This Change Order Request (C.O.R.) contains an itemized quotation for changes in the Contract Sum or Contract Time in response to proposed modifications to the Contract Documents based on Proposal Request No. _____ .

Description of Proposed Change:

Attached supporting information from: ☐ Subcontractor ☐ Supplier ☐ _____ ☐ _____

Reason For Change:

Does Proposed Change involve a change in Contract Sum? ☐ No ☐ Yes [Increase] [Decrease] $ _____

Does Proposed Change involve a change in Contract Time? ☐ No ☐ Yes [Increase] [Decrease] _____ days.

Attached pages: ☐ Proposal Worksheet Summary: _____

☐ Proposal Worksheet Detail(s): _____

Signed by: Date:

Copies: ☐ Owner ☐ Consultants ☐ _____ ☐ _____ ☐ _____ ☐ _____ ☐ File

© Copyright 1994, Construction Specifications Institute,
99 Canal Center Plaza, Suite 300 Alexandria, VA 22314

00641

RFI

Advancement of Construction Technology

REQUEST FOR INTERPRETATION

Project: _____ R.F.I. Number: _____

_____ From: _____

To: _____ Date: _____

_____ A/E Project Number: _____

Re: _____ Contract For: _____

Specification Section: Paragraph: Drawing Reference: Detail:

Request:

Signed by: Date:

Response:

☐ Attachments

Response From: To: Date Rec'd: Date Ret'd:

Signed by: Date:

Copies: ☐ Owner ☐ Consultants ☐ _____ ☐ _____ ☐ _____ ☐ _____ ☐ File

© Copyright 1994, Construction Specifications Institute,
99 Canal Center Plaza, Suite 300 Alexandria, VA 22314

00642

Nonconforming Work Notice

Advancement of Construction Technology

NONCONFORMING WORK NOTICE

Project: _____ Report Number: _____

_____ From: _____

To: _____ Date Observed: _____ Date Reported: _____

_____ A/E Project Number: _____

Re: _____ Contract For: _____

Specification Section: Paragraph: Drawing Reference: Detail:

Nature of Nonconformance:

Signed by: Date: Date Response Needed:

Proposed Correction (Response):

Amount of Time for Correction:

☐ Attachments

Response From: To: Date Rec'd: Date Ret'd:

Signed by: Date:

Copies: ☐ Owner ☐ A/E ☐ Consultants ☐ _____ ☐ _____ ☐ _____ ☐ File

©Copyright 1994, Construction Specifications Institute,
99 Canal Center Plaza, Suite 300 Alexandria, VA 22314

July 1994
CSI Form 9.8A

00643

Substitution Request

SUBSTITUTION REQUEST
(After the Bidding Phase)

Project: _____ Substitution Request Number: _____

_____ From: _____

To: _____ Date: _____

_____ Engineer's Project Number: _____

Re: _____ Contract For: _____

Specification Title: _____ Description: _____

Section: _____ Page: _____ Article/Paragraph: _____

Proposed Substitution: _____

Manufacturer: _____ Address: _____ Phone: _____

Trade Name: _____ Model No.: _____

Installer: _____ Address: _____ Phone: _____

History: ☐ New product ☐ 2-5 years old ☐ 5-10 years old ☐ More than 10 years old

Differences between proposed substitution and specified product: _____

_____

_____

☐ Point-by-point comparative data attached - REQUIRED BY ENGINEER

Reason for not providing specified item: _____

_____

Similar Installation:

Project: _____ Engineer: _____

Address: _____ Owner: _____

_____ Date Installed: _____

Proposed substitution affects other parts of Work: ☐ No ☐ Yes; explain _____

_____

Savings to Owner for accepting substitution: _____ ($ _____).

Proposed substitution changes Contract Time: ☐ No ☐ Yes [Add] [Deduct] _____ days.

Supporting Data Attached: ☐ Drawings ☐ Product Data ☐ Samples ☐ Tests ☐ Reports ☐ _____

SUBSTITUTION REQUEST
(Continued)

The Undersigned certifies:

- Proposed substitution has been fully investigated and determined to be equal or superior in all respects to specified product.
- Same warranty will be furnished for proposed substitution as for specified product.
- Same maintenance service and source of replacement parts, as applicable, is available.
- Proposed substitution will have no adverse effect on other trades and will not affect or delay progress schedule.
- Cost data as stated above is complete. Claims for additional costs related to accepted substitution which may subsequently become apparent are to be waived.
- Proposed substitution does not affect dimensions and functional clearances.
- Payment will be made for changes to building design, including A/E design, detailing, and construction costs caused by the substitution.
- Coordination, installation, and changes in the Work as necessary for accepted substitution will be complete in all respects.

Submitted by: _____

Signed by: _____

Firm: _____

Address: _____

_____

Telephone: _____

Attachments: _____

_____

_____

_____

ENGINEER'S REVIEW AND ACTION

☐ Substitution accepted - Make submittals in accordance with Section 01330 – Submittal Procedures.
☐ Substitution accepted as noted - Make submittals in accordance with Section 01330 – Submittal Procedures.
☐ Provide additional information as indicated below.
☐ Substitution rejected - Use specified materials.
☐ Substitution Request received too late - Use specified materials.

Signed by: Date:

Additional Comments: ☐ Contractor ☐ Subcontractor ☐ Supplier ☐ Manufacturer ☐ Engineer ☐ _____

_____

_____

_____

_____

_____

_____

_____

00644

Submittal Transmittal

SUBMITTAL No. ___

SUBMITTAL TRANSMITTAL

Project: _____ Date: _____

Engineer: _____ Engineer's Project Number: _____

TRANSMITTAL A

To (Engineer): Beam, Longest & Neff, LLC Attn: _____

From (Contractor): _____ By: _____ Date Trnsmt'd by Contractor: _____

Qty.	Installation Location	Title / Description / Manufacturer	Spec. Section Title and Paragraph / Drawing Detail Reference

Check One:

☐ Submitted for review

☐ Resubmitted for review

Check One:

☐ Complies with contract requirements

☐ Test or inspection does not comply with contract requirements

☐ Substitution involved - Substitution request attached, including point-by-point comparative data or preliminary details

Check One:

☐ Products will be available to meet Progress Schedule

☐ Product availability will require schedule modification

Check One:

☐ Approved without exception

☐ Approved as noted

Approval indicates CONTRACTOR has determined and verified (a) all field measurements, quantities, dimensions, specified performance and design criteria, installation requirements, materials, catalog numbers, and similar information with respect thereto; (b) the suitability of all materials with respect to intended use, fabrication, shipping, handling, storage, assembly, and installation pertaining to the performance of the Work; (c) all information relative to Contractor's responsibilities for means, methods, techniques, sequences, and procedures of construction, and safety precautions and programs incident thereto; and (d) shall also have reviewed and coordinated each Submittal with other Submittals and with the requirements of the Work and the Contract Documents.

Other remarks on above submission:

☐ One copy retained by sender

_____

Contractor

TRANSMITTAL B

To (Contractor): _____ Attn: _____ Date Rec'd by Engineer: _____

From (Engineer): _____ ☐ Other, By: _____ Date Trnsmt'd by Engineer: _____

☐ Approved

☐ Approved as noted

☐ Revise as noted/ Resubmit

☐ Rejected/Resubmit as Specified

☐ Submission Incomplete / Resubmit

☐ Not subject to review

☐ No action required

☐ Provide file copy with corrections identified

☐ Copies only returned

☐ Point-by-point comparative data required to complete approval process

Other remarks on above submission:

☐ One copy retained by sender

_____

Engineer

Actions, corrections, or comments made on the Submittals during this review do not relieve the Contractor from compliance with requirements of the plans and specifications.

SUPPLEMENTAL SUBMITTAL INFORMATION

SUBMITTAL No. ___

Project: _____ Date: _____

Engineer: _____ Engineer's Project Number: _____

CONTRACTOR

Name: _____ Reviewer: _____
Address: _____ Review Date: _____
_____ Field Verification By: _____
_____ Field Verification Date: _____
Superintendent Initials: _____

SUBCONTRACTOR

Name: _____ Trade: _____
Address: _____
_____
_____

SUPPLIER

Name: _____
Address: _____
_____
_____

SUBMITTAL PREPARED BY:

Contractor: ☐
Subcontractor: ☐
Supplier: ☐
Manufacturer ☐

CONTRACTOR'S COMMENTS:

_____
_____
_____
_____
_____
_____
_____
_____
_____
_____
_____
_____
_____
_____
_____

Additional Comments Attached ☐

00646

Schedule of Submittals

SCHEDULE OF SUBMITTALS

Project: _____ Engineer's Project Number: _____

Owner: _____ Contractor: _____

	SCHEDULED SUBMITTAL DATE														
	PRE-CONSTRUCTION										POST-CONSTRUCTION				
SPECIFICATION SECTION (Number and Title)	ACTION SUBMITTALS			INFORMATIONAL SUBMITTALS							MANUF. FIELD REPORT	RECORD DOC.	O&M DATA	WAR-RANTY	OTHER (DESC)
	PROD. DATA	SHOP DWG.	SAMPLE	CALCS.	DESIGN DATA	TEST REPORT	CERTIFI-CATION	QUALIF-ICATION	MANUF. INSTR.	OTHER (DESC)					

Page of

00651

Certificate of Substantial Completion

CERTIFICATE OF SUBSTANTIAL COMPLETION

Owner:	**Chandler Utilities**	Owner's Project No.:	**N/A**
Engineer:	**Egis BLN USA, Inc.**	Engineer's Project No.:	**240050**
Contractor:		Contractor's Project No.:	
Project:	**Chandler 1.5 Million Gallon Water Tower**		
Contract Name:	**All Work**		

This ☐ Preliminary ☐ Final Certificate of Substantial Completion applies to:

☐ All Work ☐ The following specified portions of the Work:

[Describe the portion of the work for which Certificate of Substantial Completion is issued]

Date of Substantial Completion:

The Work to which this Certificate applies has been inspected by authorized representatives of Owner, Contractor, and Engineer, and found to be substantially complete. The Date of Substantial Completion of the Work or portion thereof designated above is hereby established, subject to the provisions of the Contract pertaining to Substantial Completion. The date of Substantial Completion in the final Certificate of Substantial Completion marks the commencement of the contractual correction period and applicable warranties required by the Contract.

A punch list of items to be completed or corrected is attached to this Certificate. This list may not be all-inclusive, and the failure to include any items on such list does not alter the responsibility of the Contractor to complete all Work in accordance with the Contract Documents.

Amendments of contractual responsibilities recorded in this Certificate should be the product of mutual agreement of Owner and Contractor; see Paragraph 15.03.D of the General Conditions.

The responsibilities between Owner and Contractor for security, operation, safety, maintenance, heat, utilities, insurance, and warranties upon Owner's use or occupancy of the Work must be as provided in the Contract, except as amended as follows:

Amendments to Owner's Responsibilities: ☐ None ☐ As follows:

Amendments to Contractor's Responsibilities: ☐ None ☐ As follows:

The following documents are attached to and made a part of this Certificate:

This Certificate does not constitute an acceptance of Work not in accordance with the Contract Documents, nor is it a release of Contractor's obligation to complete the Work in accordance with the Contract Documents.

Engineer

By *(signature)*: _____

Name *(printed)*: _____

Title: _____

Copyright© 2018 National Society of Professional Engineers, American Council of Engineering Companies, and American Society of Civil Engineers. All rights reserved.

00652

Punch List

PUNCH LIST

Project: _____

_____

To (Contractor): _____

_____

From (Engineer): _____

Site Visit Date: _____

Engineer's Project Number: _____

Contract For: _____

The following items require the attention of the Contractor for completion or correction. This list may not be all-inclusive, and the failure to include any items on this list does not alter the responsibility of the Contractor to complete all Work in accordance with the Contract Documents.

Item Number	Location (Area)	Correction/Completion Description	Verification Date	Eng Check

☐ Attachments

Signed by: Date:

Copies: ☐ Owner ☐ Consultants ☐ _____ ☐ _____ ☐ _____ ☐ _____ ☐ _____ ☐ _____ ☐ _____ ☐ File

00653

Certificate of Compliance

CERTIFICATE OF COMPLIANCE BY CONTRACTOR

Date:

PROJECT TITLE:
PROJECT NO:
OWNER:
ADDRESS:

I, the undersigned Contractor, do hereby certify that:

1. The construction provided pursuant to above project, including all approved amendments, has been completed as of _____ , 20____ , and is in compliance with the provisions of the Contract Documents, including all plans, specifications, maps, and drawings and all modifications thereof.

2. Acceptance of the project by the Owner shall not be deemed to relieve the Contractor of its obligations contained in the Construction Contract with respect to defective workmanship or materials discovered within one year after the date of completion.

3. Payment in full has been made to all persons who have furnished labor for the project.

4. The Contractor has obtained valid releases of lien from all manufacturers, material suppliers, and subcontractors furnishing services or materials which were employed by the Contractor in the performance of the Contract Documents, and that such releases have been delivered by the Contractor to the Owner.

5. All defects in workmanship and materials reported during the period of construction of the project have been corrected.

6. All applicable tests, certificates and regulatory inspections required by agencies having jurisdiction and required by the Contract Documents have been performed with respect to the completed project and Owner has been provided with a copy of each report.

7. As-built marked up prints of the completed project have been provided to the Engineer as required by the Contract Documents.

8. The Owner has been provided with a copy of all warranties and guarantees, including the starting date(s) of all warranties and guarantees, written and unwritten, required by the Contract Documents.

9. All training, operating instructions and maintenance manuals required by the Contract Documents have been provided to the Owner.

_____
(Typed Contractor Name)

By:_____

_____
(Typed Name &Title of Person Signing)

cc: Engineer

00700

General Conditions

STANDARD GENERAL CONDITIONS OF THE CONSTRUCTION CONTRACT

TABLE OF CONTENTS

Page

Article 1—Definitions and Terminology 1
1.01 Defined Terms 1
1.02 Terminology 6
Article 2—Preliminary Matters 7
2.01 Delivery of Performance and Payment Bonds; Evidence of Insurance 7
2.02 Copies of Documents 7
2.03 Before Starting Construction 8
2.04 Preconstruction Conference; Designation of Authorized Representatives 8
2.05 Acceptance of Schedules 8
2.06 Electronic Transmittals 9
Article 3—Contract Documents: Intent, Requirements, Reuse 9
3.01 Intent 9
3.02 Reference Standards 10
3.03 Reporting and Resolving Discrepancies 10
3.04 Requirements of the Contract Documents 11
3.05 Reuse of Documents 11
Article 4—Commencement and Progress of the Work 12
4.01 Commencement of Contract Times; Notice to Proceed 12
4.02 Starting the Work 12
4.03 Reference Points 12
4.04 Progress Schedule 12
4.05 Delays in Contractor's Progress 12
Article 5—Site; Subsurface and Physical Conditions; Hazardous Environmental Conditions 14
5.01 Availability of Lands 14
5.02 Use of Site and Other Areas 14
5.03 Subsurface and Physical Conditions 15
5.04 Differing Subsurface or Physical Conditions 16

Copyright© 2018 National Society of Professional Engineers, American Council of Engineering Companies, and American Society of Civil Engineers. All rights reserved.

5.05 Underground Facilities 18
5.06 Hazardous Environmental Conditions at Site 19
Article 6—Bonds and Insurance 22
6.01 Performance, Payment, and Other Bonds 22
6.02 Insurance—General Provisions 22
6.03 Contractor's Insurance 24
6.04 Builder's Risk and Other Property Insurance 25
6.05 Property Losses; Subrogation 26
6.06 Receipt and Application of Property Insurance Proceeds 27
Article 7—Contractor's Responsibilities 27
7.01 Contractor's Means and Methods of Construction 27
7.02 Supervision and Superintendence 28
7.03 Labor; Working Hours 28
7.04 Services, Materials, and Equipment 28
7.05 "Or Equals" 29
7.06 Substitutes 30
7.07 Concerning Subcontractors and Suppliers 31
7.08 Patent Fees and Royalties 32
7.09 Permits 33
7.10 Taxes 33
7.11 Laws and Regulations 33
7.12 Record Documents 34
7.13 Safety and Protection 34
7.14 Hazard Communication Programs 35
7.15 Emergencies 35
7.16 Submittals 36
7.17 Contractor's General Warranty and Guarantee 38
7.18 Indemnification 39
7.19 Delegation of Professional Design Services 40
Article 8—Other Work at the Site 41
8.01 Other Work 41
8.02 Coordination 41
8.03 Legal Relationships 42

Copyright© 2018 National Society of Professional Engineers, American Council of Engineering Companies, and American Society of Civil Engineers. All rights reserved.

Article 9—Owner's Responsibilities 43
9.01 Communications to Contractor 43
9.02 Replacement of Engineer 43
9.03 Furnish Data 43
9.04 Pay When Due 43
9.05 Lands and Easements; Reports, Tests, and Drawings 43
9.06 Insurance 43
9.07 Change Orders 43
9.08 Inspections, Tests, and Approvals 44
9.09 Limitations on Owner's Responsibilities 44
9.10 Undisclosed Hazardous Environmental Condition 44
9.11 Evidence of Financial Arrangements 44
9.12 Safety Programs 44
Article 10—Engineer's Status During Construction 44
10.01 Owner's Representative 44
10.02 Visits to Site 44
10.03 Resident Project Representative 45
10.04 Engineer's Authority 45
10.05 Determinations for Unit Price Work 45
10.06 Decisions on Requirements of Contract Documents and Acceptability of Work 45
10.07 Limitations on Engineer's Authority and Responsibilities 45
10.08 Compliance with Safety Program 46
Article 11—Changes to the Contract 46
11.01 Amending and Supplementing the Contract 46
11.02 Change Orders 46
11.03 Work Change Directives 47
11.04 Field Orders 47
11.05 Owner-Authorized Changes in the Work 47
11.06 Unauthorized Changes in the Work 48
11.07 Change of Contract Price 48
11.08 Change of Contract Times 49
11.09 Change Proposals 49
11.10 Notification to Surety 51

Copyright© 2018 National Society of Professional Engineers, American Council of Engineering Companies, and American Society of Civil Engineers. All rights reserved.

Article 12—Claims 51
12.01 Claims 51
Article 13—Cost of the Work; Allowances; Unit Price Work 52
13.01 Cost of the Work 52
13.02 Allowances 56
13.03 Unit Price Work 56
Article 14—Tests and Inspections; Correction, Removal, or Acceptance of Defective Work 57
14.01 Access to Work 57
14.02 Tests, Inspections, and Approvals 57
14.03 Defective Work 58
14.04 Acceptance of Defective Work 58
14.05 Uncovering Work 59
14.06 Owner May Stop the Work 59
14.07 Owner May Correct Defective Work 59
Article 15—Payments to Contractor; Set-Offs; Completion; Correction Period 60
15.01 Progress Payments 60
15.02 Contractor's Warranty of Title 63
15.03 Substantial Completion 63
15.04 Partial Use or Occupancy 64
15.05 Final Inspection 65
15.06 Final Payment 65
15.07 Waiver of Claims 66
15.08 Correction Period 67
Article 16—Suspension of Work and Termination 68
16.01 Owner May Suspend Work 68
16.02 Owner May Terminate for Cause 68
16.03 Owner May Terminate for Convenience 69
16.04 Contractor May Stop Work or Terminate 69
Article 17—Final Resolution of Disputes 70
17.01 Methods and Procedures 70
Article 18—Miscellaneous 70
18.01 Giving Notice 70
18.02 Computation of Times 70

Copyright© 2018 National Society of Professional Engineers, American Council of Engineering Companies, and American Society of Civil Engineers. All rights reserved.

18.03 Cumulative Remedies 70
18.04 Limitation of Damages 71
18.05 No Waiver 71
18.06 Survival of Obligations 71
18.07 Controlling Law 71
18.08 Assignment of Contract 71
18.09 Successors and Assigns 71
18.10 Headings 71

Copyright© 2018 National Society of Professional Engineers, American Council of Engineering Companies, and American Society of Civil Engineers. All rights reserved.

STANDARD GENERAL CONDITIONS OF THE CONSTRUCTION CONTRACT

ARTICLE 1—DEFINITIONS AND TERMINOLOGY

1.01 *Defined Terms*

A. Wherever used in the Bidding Requirements or Contract Documents, a term printed with initial capital letters, including the term's singular and plural forms, will have the meaning indicated in the definitions below. In addition to terms specifically defined, terms with initial capital letters in the Contract Documents include references to identified articles and paragraphs, and the titles of other documents or forms.

1. *Addenda*—Written or graphic instruments issued prior to the opening of Bids which clarify, correct, or change the Bidding Requirements or the proposed Contract Documents.

2. *Agreement*—The written instrument, executed by Owner and Contractor, that sets forth the Contract Price and Contract Times, identifies the parties and the Engineer, and designates the specific items that are Contract Documents.

3. *Application for Payment*—The document prepared by Contractor, in a form acceptable to Engineer, to request progress or final payments, and which is to be accompanied by such supporting documentation as is required by the Contract Documents.

4. *Bid*—The offer of a Bidder submitted on the prescribed form setting forth the prices for the Work to be performed.

5. *Bidder*—An individual or entity that submits a Bid to Owner.

6. *Bidding Documents*—The Bidding Requirements, the proposed Contract Documents, and all Addenda.

7. *Bidding Requirements*—The Advertisement or invitation to bid, Instructions to Bidders, Bid Bond or other Bid security, if any, the Bid Form, and the Bid with any attachments.

8. *Change Order*—A document which is signed by Contractor and Owner and authorizes an addition, deletion, or revision in the Work or an adjustment in the Contract Price or the Contract Times, or other revision to the Contract, issued on or after the Effective Date of the Contract.

9. *Change Proposal*—A written request by Contractor, duly submitted in compliance with the procedural requirements set forth herein, seeking an adjustment in Contract Price or Contract Times; contesting an initial decision by Engineer concerning the requirements of the Contract Documents or the acceptability of Work under the Contract Documents; challenging a set-off against payments due; or seeking other relief with respect to the terms of the Contract.

10. *Claim*

a. A demand or assertion by Owner directly to Contractor, duly submitted in compliance with the procedural requirements set forth herein, seeking an adjustment of Contract Price or Contract Times; contesting an initial decision by

Copyright© 2018 National Society of Professional Engineers, American Council of Engineering Companies, and American Society of Civil Engineers. All rights reserved.

Engineer concerning the requirements of the Contract Documents or the acceptability of Work under the Contract Documents; contesting Engineer's decision regarding a Change Proposal; seeking resolution of a contractual issue that Engineer has declined to address; or seeking other relief with respect to the terms of the Contract.

b. A demand or assertion by Contractor directly to Owner, duly submitted in compliance with the procedural requirements set forth herein, contesting Engineer's decision regarding a Change Proposal, or seeking resolution of a contractual issue that Engineer has declined to address.

c. A demand or assertion by Owner or Contractor, duly submitted in compliance with the procedural requirements set forth herein, made pursuant to Paragraph 12.01.A.4, concerning disputes arising after Engineer has issued a recommendation of final payment.

d. A demand for money or services by a third party is not a Claim.

11. *Constituent of Concern*—Asbestos, petroleum, radioactive materials, polychlorinated biphenyls (PCBs), lead-based paint (as defined by the HUD/EPA standard), hazardous waste, and any substance, product, waste, or other material of any nature whatsoever that is or becomes listed, regulated, or addressed pursuant to Laws and Regulations regulating, relating to, or imposing liability or standards of conduct concerning, any hazardous, toxic, or dangerous waste, substance, or material.

12. *Contract*—The entire and integrated written contract between Owner and Contractor concerning the Work.

13. *Contract Documents*—Those items so designated in the Agreement, and which together comprise the Contract.

14. *Contract Price*—The money that Owner has agreed to pay Contractor for completion of the Work in accordance with the Contract Documents.

15. *Contract Times*—The number of days or the dates by which Contractor shall: (a) achieve Milestones, if any; (b) achieve Substantial Completion; and (c) complete the Work.

16. *Contractor*—The individual or entity with which Owner has contracted for performance of the Work.

17. *Cost of the Work*—See Paragraph 13.01 for definition.

18. *Drawings*—The part of the Contract that graphically shows the scope, extent, and character of the Work to be performed by Contractor.

19. *Effective Date of the Contract*—The date, indicated in the Agreement, on which the Contract becomes effective.

20. *Electronic Document*—Any Project-related correspondence, attachments to correspondence, data, documents, drawings, information, or graphics, including but not limited to Shop Drawings and other Submittals, that are in an electronic or digital format.

21. *Electronic Means*—Electronic mail (email), upload/download from a secure Project website, or other communications methods that allow: (a) the transmission or

Copyright© 2018 National Society of Professional Engineers, American Council of Engineering Companies, and American Society of Civil Engineers. All rights reserved.

communication of Electronic Documents; (b) the documentation of transmissions, including sending and receipt; (c) printing of the transmitted Electronic Document by the recipient; (d) the storage and archiving of the Electronic Document by sender and recipient; and (e) the use by recipient of the Electronic Document for purposes permitted by this Contract. Electronic Means does not include the use of text messaging, or of Facebook, Twitter, Instagram, or similar social media services for transmission of Electronic Documents.

22. *Engineer*—The individual or entity named as such in the Agreement.

23. *Field Order*—A written order issued by Engineer which requires minor changes in the Work but does not change the Contract Price or the Contract Times.

24. *Hazardous Environmental Condition*—The presence at the Site of Constituents of Concern in such quantities or circumstances that may present a danger to persons or property exposed thereto.

    a. The presence at the Site of materials that are necessary for the execution of the Work, or that are to be incorporated into the Work, and that are controlled and contained pursuant to industry practices, Laws and Regulations, and the requirements of the Contract, is not a Hazardous Environmental Condition.

    b. The presence of Constituents of Concern that are to be removed or remediated as part of the Work is not a Hazardous Environmental Condition.

    c. The presence of Constituents of Concern as part of the routine, anticipated, and obvious working conditions at the Site, is not a Hazardous Environmental Condition.

25. *Laws and Regulations; Laws or Regulations*—Any and all applicable laws, statutes, rules, regulations, ordinances, codes, and binding decrees, resolutions, and orders of any and all governmental bodies, agencies, authorities, and courts having jurisdiction.

26. *Liens*—Charges, security interests, or encumbrances upon Contract-related funds, real property, or personal property.

27. *Milestone*—A principal event in the performance of the Work that the Contract requires Contractor to achieve by an intermediate completion date, or by a time prior to Substantial Completion of all the Work.

28. *Notice of Award*—The written notice by Owner to a Bidder of Owner's acceptance of the Bid.

29. *Notice to Proceed*—A written notice by Owner to Contractor fixing the date on which the Contract Times will commence to run and on which Contractor shall start to perform the Work.

30. *Owner*—The individual or entity with which Contractor has contracted regarding the Work, and which has agreed to pay Contractor for the performance of the Work, pursuant to the terms of the Contract.

31. *Progress Schedule*—A schedule, prepared and maintained by Contractor, describing the sequence and duration of the activities comprising Contractor's plan to accomplish the Work within the Contract Times.

Copyright© 2018 National Society of Professional Engineers, American Council of Engineering Companies, and American Society of Civil Engineers. All rights reserved.

32. *Project*—The total undertaking to be accomplished for Owner by engineers, contractors, and others, including planning, study, design, construction, testing, commissioning, and start-up, and of which the Work to be performed under the Contract Documents is a part.

33. *Resident Project Representative*—The authorized representative of Engineer assigned to assist Engineer at the Site. As used herein, the term Resident Project Representative (RPR) includes any assistants or field staff of Resident Project Representative.

34. *Samples*—Physical examples of materials, equipment, or workmanship that are representative of some portion of the Work and that establish the standards by which such portion of the Work will be judged.

35. *Schedule of Submittals*—A schedule, prepared and maintained by Contractor, of required submittals and the time requirements for Engineer's review of the submittals.

36. *Schedule of Values*—A schedule, prepared and maintained by Contractor, allocating portions of the Contract Price to various portions of the Work and used as the basis for reviewing Contractor's Applications for Payment.

37. *Shop Drawings*—All drawings, diagrams, illustrations, schedules, and other data or information that are specifically prepared or assembled by or for Contractor and submitted by Contractor to illustrate some portion of the Work. Shop Drawings, whether approved or not, are not Drawings and are not Contract Documents.

38. *Site*—Lands or areas indicated in the Contract Documents as being furnished by Owner upon which the Work is to be performed, including rights-of-way and easements, and such other lands or areas furnished by Owner which are designated for the use of Contractor.

39. *Specifications*—The part of the Contract that consists of written requirements for materials, equipment, systems, standards, and workmanship as applied to the Work, and certain administrative requirements and procedural matters applicable to the Work.

40. *Subcontractor*—An individual or entity having a direct contract with Contractor or with any other Subcontractor for the performance of a part of the Work.

41. *Submittal*—A written or graphic document, prepared by or for Contractor, which the Contract Documents require Contractor to submit to Engineer, or that is indicated as a Submittal in the Schedule of Submittals accepted by Engineer. Submittals may include Shop Drawings and Samples; schedules; product data; Owner-delegated designs; sustainable design information; information on special procedures; testing plans; results of tests and evaluations, source quality-control testing and inspections, and field or Site quality-control testing and inspections; warranties and certifications; Suppliers' instructions and reports; records of delivery of spare parts and tools; operations and maintenance data; Project photographic documentation; record documents; and other such documents required by the Contract Documents. Submittals, whether or not approved or accepted by Engineer, are not Contract Documents. Change Proposals, Change Orders, Claims, notices, Applications for Payment, and requests for interpretation or clarification are not Submittals.

42. *Substantial Completion*—The time at which the Work (or a specified part thereof) has progressed to the point where, in the opinion of Engineer, the Work (or a specified part

Copyright© 2018 National Society of Professional Engineers, American Council of Engineering Companies, and American Society of Civil Engineers. All rights reserved.

thereof) is sufficiently complete, in accordance with the Contract Documents, so that the Work (or a specified part thereof) can be utilized for the purposes for which it is intended. The terms "substantially complete" and "substantially completed" as applied to all or part of the Work refer to Substantial Completion of such Work.

43. *Successful Bidder*—The Bidder to which the Owner makes an award of contract.

44. *Supplementary Conditions*—The part of the Contract that amends or supplements these General Conditions.

45. *Supplier*—A manufacturer, fabricator, supplier, distributor, or vendor having a direct contract with Contractor or with any Subcontractor to furnish materials or equipment to be incorporated in the Work by Contractor or a Subcontractor.

46. *Technical Data*

    a. Those items expressly identified as Technical Data in the Supplementary Conditions, with respect to either (1) existing subsurface conditions at or adjacent to the Site, or existing physical conditions at or adjacent to the Site including existing surface or subsurface structures (except Underground Facilities) or (2) Hazardous Environmental Conditions at the Site.

    b. If no such express identifications of Technical Data have been made with respect to conditions at the Site, then Technical Data is defined, with respect to conditions at the Site under Paragraphs 5.03, 5.04, and 5.06, as the data contained in boring logs, recorded measurements of subsurface water levels, assessments of the condition of subsurface facilities, laboratory test results, and other factual, objective information regarding conditions at the Site that are set forth in any geotechnical, environmental, or other Site or facilities conditions report prepared for the Project and made available to Contractor.

    c. Information and data regarding the presence or location of Underground Facilities are not intended to be categorized, identified, or defined as Technical Data, and instead Underground Facilities are shown or indicated on the Drawings.

47. *Underground Facilities*—All active or not-in-service underground lines, pipelines, conduits, ducts, encasements, cables, wires, manholes, vaults, tanks, tunnels, or other such facilities or systems at the Site, including but not limited to those facilities or systems that produce, transmit, distribute, or convey telephone or other communications, cable television, fiber optic transmissions, power, electricity, light, heat, gases, oil, crude oil products, liquid petroleum products, water, steam, waste, wastewater, storm water, other liquids or chemicals, or traffic or other control systems. An abandoned facility or system is not an Underground Facility.

48. *Unit Price Work*—Work to be paid for on the basis of unit prices.

49. *Work*—The entire construction or the various separately identifiable parts thereof required to be provided under the Contract Documents. Work includes and is the result of performing or providing all labor, services, and documentation necessary to produce such construction; furnishing, installing, and incorporating all materials and equipment into such construction; and may include related services such as testing, start-up, and commissioning, all as required by the Contract Documents.

Copyright© 2018 National Society of Professional Engineers, American Council of Engineering Companies, and American Society of Civil Engineers. All rights reserved.

50. *Work Change Directive*—A written directive to Contractor issued on or after the Effective Date of the Contract, signed by Owner and recommended by Engineer, ordering an addition, deletion, or revision in the Work.

1.02 *Terminology*

A. The words and terms discussed in Paragraphs 1.02.B, C, D, and E are not defined terms that require initial capital letters, but, when used in the Bidding Requirements or Contract Documents, have the indicated meaning.

B. *Intent of Certain Terms or Adjectives*: The Contract Documents include the terms "as allowed," "as approved," "as ordered," "as directed" or terms of like effect or import to authorize an exercise of professional judgment by Engineer. In addition, the adjectives "reasonable," "suitable," "acceptable," "proper," "satisfactory," or adjectives of like effect or import are used to describe an action or determination of Engineer as to the Work. It is intended that such exercise of professional judgment, action, or determination will be solely to evaluate, in general, the Work for compliance with the information in the Contract Documents and with the design concept of the Project as a functioning whole as shown or indicated in the Contract Documents (unless there is a specific statement indicating otherwise). The use of any such term or adjective is not intended to and shall not be effective to assign to Engineer any duty or authority to supervise or direct the performance of the Work, or any duty or authority to undertake responsibility contrary to the provisions of Article 10 or any other provision of the Contract Documents.

C. *Day*: The word "day" means a calendar day of 24 hours measured from midnight to the next midnight.

D. *Defective*: The word "defective," when modifying the word "Work," refers to Work that is unsatisfactory, faulty, or deficient in that it:

1. does not conform to the Contract Documents;

2. does not meet the requirements of any applicable inspection, reference standard, test, or approval referred to in the Contract Documents; or

3. has been damaged prior to Engineer's recommendation of final payment (unless responsibility for the protection thereof has been assumed by Owner at Substantial Completion in accordance with Paragraph 15.03 or Paragraph 15.04).

E. *Furnish, Install, Perform, Provide*

1. The word "furnish," when used in connection with services, materials, or equipment, means to supply and deliver said services, materials, or equipment to the Site (or some other specified location) ready for use or installation and in usable or operable condition.

2. The word "install," when used in connection with services, materials, or equipment, means to put into use or place in final position said services, materials, or equipment complete and ready for intended use.

3. The words "perform" or "provide," when used in connection with services, materials, or equipment, means to furnish and install said services, materials, or equipment complete and ready for intended use.

Copyright© 2018 National Society of Professional Engineers, American Council of Engineering Companies, and American Society of Civil Engineers. All rights reserved.

4. If the Contract Documents establish an obligation of Contractor with respect to specific services, materials, or equipment, but do not expressly use any of the four words "furnish," "install," "perform," or "provide," then Contractor shall furnish and install said services, materials, or equipment complete and ready for intended use.

F. *Contract Price or Contract Times*: References to a change in "Contract Price or Contract Times" or "Contract Times or Contract Price" or similar, indicate that such change applies to (1) Contract Price, (2) Contract Times, or (3) both Contract Price and Contract Times, as warranted, even if the term "or both" is not expressed.

G. Unless stated otherwise in the Contract Documents, words or phrases that have a well-known technical or construction industry or trade meaning are used in the Contract Documents in accordance with such recognized meaning.

ARTICLE 2—PRELIMINARY MATTERS

2.01 *Delivery of Performance and Payment Bonds; Evidence of Insurance*

A. *Performance and Payment Bonds*: When Contractor delivers the signed counterparts of the Agreement to Owner, Contractor shall also deliver to Owner the performance bond and payment bond (if the Contract requires Contractor to furnish such bonds).

B. *Evidence of Contractor's Insurance*: When Contractor delivers the signed counterparts of the Agreement to Owner, Contractor shall also deliver to Owner, with copies to each additional insured (as identified in the Contract), the certificates, endorsements, and other evidence of insurance required to be provided by Contractor in accordance with Article 6, except to the extent the Supplementary Conditions expressly establish other dates for delivery of specific insurance policies.

C. *Evidence of Owner's Insurance*: After receipt of the signed counterparts of the Agreement and all required bonds and insurance documentation, Owner shall promptly deliver to Contractor, with copies to each additional insured (as identified in the Contract), the certificates and other evidence of insurance required to be provided by Owner under Article 6.

2.02 *Copies of Documents*

A. Owner shall furnish to Contractor four printed copies of the Contract (including one fully signed counterpart of the Agreement), and one copy in electronic portable document format (PDF). Additional printed copies will be furnished upon request at the cost of reproduction.

B. Owner shall maintain and safeguard at least one original printed record version of the Contract, including Drawings and Specifications signed and sealed by Engineer and other design professionals. Owner shall make such original printed record version of the Contract available to Contractor for review. Owner may delegate the responsibilities under this provision to Engineer.

Copyright© 2018 National Society of Professional Engineers, American Council of Engineering Companies, and American Society of Civil Engineers. All rights reserved.

2.03 *Before Starting Construction*

A. *Preliminary Schedules*: Within 10 days after the Effective Date of the Contract (or as otherwise required by the Contract Documents), Contractor shall submit to Engineer for timely review:

1. a preliminary Progress Schedule indicating the times (numbers of days or dates) for starting and completing the various stages of the Work, including any Milestones specified in the Contract;

2. a preliminary Schedule of Submittals; and

3. a preliminary Schedule of Values for all of the Work which includes quantities and prices of items which when added together equal the Contract Price and subdivides the Work into component parts in sufficient detail to serve as the basis for progress payments during performance of the Work. Such prices will include an appropriate amount of overhead and profit applicable to each item of Work.

2.04 *Preconstruction Conference; Designation of Authorized Representatives*

A. Before any Work at the Site is started, a conference attended by Owner, Contractor, Engineer, and others as appropriate will be held to establish a working understanding among the parties as to the Work, and to discuss the schedules referred to in Paragraph 2.03.A, procedures for handling Shop Drawings, Samples, and other Submittals, processing Applications for Payment, electronic or digital transmittals, and maintaining required records.

B. At this conference Owner and Contractor each shall designate, in writing, a specific individual to act as its authorized representative with respect to the services and responsibilities under the Contract. Such individuals shall have the authority to transmit and receive information, render decisions relative to the Contract, and otherwise act on behalf of each respective party.

2.05 *Acceptance of Schedules*

A. At least 10 days before submission of the first Application for Payment a conference, attended by Contractor, Engineer, and others as appropriate, will be held to review the schedules submitted in accordance with Paragraph 2.03.A. No progress payment will be made to Contractor until acceptable schedules are submitted to Engineer.

1. The Progress Schedule will be acceptable to Engineer if it provides an orderly progression of the Work to completion within the Contract Times. Such acceptance will not impose on Engineer responsibility for the Progress Schedule, for sequencing, scheduling, or progress of the Work, nor interfere with or relieve Contractor from Contractor's full responsibility therefor.

2. Contractor's Schedule of Submittals will be acceptable to Engineer if it provides a workable arrangement for reviewing and processing the required submittals.

3. Contractor's Schedule of Values will be acceptable to Engineer as to form and substance if it provides a reasonable allocation of the Contract Price to the component parts of the Work.

4. If a schedule is not acceptable, Contractor will have an additional 10 days to revise and resubmit the schedule.

Copyright© 2018 National Society of Professional Engineers, American Council of Engineering Companies, and American Society of Civil Engineers. All rights reserved.

2.06 *Electronic Transmittals*

A. Except as otherwise stated elsewhere in the Contract, the Owner, Engineer, and Contractor may send, and shall accept, Electronic Documents transmitted by Electronic Means.

B. If the Contract does not establish protocols for Electronic Means, then Owner, Engineer, and Contractor shall jointly develop such protocols.

C. Subject to any governing protocols for Electronic Means, when transmitting Electronic Documents by Electronic Means, the transmitting party makes no representations as to long-term compatibility, usability, or readability of the Electronic Documents resulting from the recipient's use of software application packages, operating systems, or computer hardware differing from those used in the drafting or transmittal of the Electronic Documents.

ARTICLE 3—CONTRACT DOCUMENTS: INTENT, REQUIREMENTS, REUSE

3.01 *Intent*

A. The Contract Documents are complementary; what is required by one Contract Document is as binding as if required by all.

B. It is the intent of the Contract Documents to describe a functionally complete Project (or part thereof) to be constructed in accordance with the Contract Documents.

C. Unless otherwise stated in the Contract Documents, if there is a discrepancy between the electronic versions of the Contract Documents (including any printed copies derived from such electronic versions) and the printed record version, the printed record version will govern.

D. The Contract supersedes prior negotiations, representations, and agreements, whether written or oral.

E. Engineer will issue clarifications and interpretations of the Contract Documents as provided herein.

F. Any provision or part of the Contract Documents held to be void or unenforceable under any Law or Regulation will be deemed stricken, and all remaining provisions will continue to be valid and binding upon Owner and Contractor, which agree that the Contract Documents will be reformed to replace such stricken provision or part thereof with a valid and enforceable provision that comes as close as possible to expressing the intention of the stricken provision.

G. Nothing in the Contract Documents creates:

1. any contractual relationship between Owner or Engineer and any Subcontractor, Supplier, or other individual or entity performing or furnishing any of the Work, for the benefit of such Subcontractor, Supplier, or other individual or entity; or

2. any obligation on the part of Owner or Engineer to pay or to see to the payment of any money due any such Subcontractor, Supplier, or other individual or entity, except as may otherwise be required by Laws and Regulations.

Copyright© 2018 National Society of Professional Engineers, American Council of Engineering Companies, and American Society of Civil Engineers. All rights reserved.

3.02 *Reference Standards*

A. *Standards Specifications, Codes, Laws and Regulations*

1. Reference in the Contract Documents to standard specifications, manuals, reference standards, or codes of any technical society, organization, or association, or to Laws or Regulations, whether such reference be specific or by implication, means the standard specification, manual, reference standard, code, or Laws or Regulations in effect at the time of opening of Bids (or on the Effective Date of the Contract if there were no Bids), except as may be otherwise specifically stated in the Contract Documents.

2. No provision of any such standard specification, manual, reference standard, or code, and no instruction of a Supplier, will be effective to change the duties or responsibilities of Owner, Contractor, or Engineer from those set forth in the part of the Contract Documents prepared by or for Engineer. No such provision or instruction shall be effective to assign to Owner or Engineer any duty or authority to supervise or direct the performance of the Work, or any duty or authority to undertake responsibility inconsistent with the provisions of the part of the Contract Documents prepared by or for Engineer.

3.03 *Reporting and Resolving Discrepancies*

A. *Reporting Discrepancies*

1. *Contractor's Verification of Figures and Field Measurements*: Before undertaking each part of the Work, Contractor shall carefully study the Contract Documents, and check and verify pertinent figures and dimensions therein, particularly with respect to applicable field measurements. Contractor shall promptly report in writing to Engineer any conflict, error, ambiguity, or discrepancy that Contractor discovers, or has actual knowledge of, and shall not proceed with any Work affected thereby until the conflict, error, ambiguity, or discrepancy is resolved by a clarification or interpretation by Engineer, or by an amendment or supplement to the Contract issued pursuant to Paragraph 11.01.

2. *Contractor's Review of Contract Documents*: If, before or during the performance of the Work, Contractor discovers any conflict, error, ambiguity, or discrepancy within the Contract Documents, or between the Contract Documents and (a) any applicable Law or Regulation, (b) actual field conditions, (c) any standard specification, manual, reference standard, or code, or (d) any instruction of any Supplier, then Contractor shall promptly report it to Engineer in writing. Contractor shall not proceed with the Work affected thereby (except in an emergency as required by Paragraph 7.15) until the conflict, error, ambiguity, or discrepancy is resolved, by a clarification or interpretation by Engineer, or by an amendment or supplement to the Contract issued pursuant to Paragraph 11.01.

3. Contractor shall not be liable to Owner or Engineer for failure to report any conflict, error, ambiguity, or discrepancy in the Contract Documents unless Contractor had actual knowledge thereof.

B. *Resolving Discrepancies*

1. Except as may be otherwise specifically stated in the Contract Documents, the provisions of the part of the Contract Documents prepared by or for Engineer take

Copyright© 2018 National Society of Professional Engineers, American Council of Engineering Companies, and American Society of Civil Engineers. All rights reserved.

precedence in resolving any conflict, error, ambiguity, or discrepancy between such provisions of the Contract Documents and:

a. the provisions of any standard specification, manual, reference standard, or code, or the instruction of any Supplier (whether or not specifically incorporated by reference as a Contract Document); or

b. the provisions of any Laws or Regulations applicable to the performance of the Work (unless such an interpretation of the provisions of the Contract Documents would result in violation of such Law or Regulation).

3.04 *Requirements of the Contract Documents*

A. During the performance of the Work and until final payment, Contractor and Owner shall submit to the Engineer in writing all matters in question concerning the requirements of the Contract Documents (sometimes referred to as requests for information or interpretation—RFIs), or relating to the acceptability of the Work under the Contract Documents, as soon as possible after such matters arise. Engineer will be the initial interpreter of the requirements of the Contract Documents, and judge of the acceptability of the Work.

B. Engineer will, with reasonable promptness, render a written clarification, interpretation, or decision on the issue submitted, or initiate an amendment or supplement to the Contract Documents. Engineer's written clarification, interpretation, or decision will be final and binding on Contractor, unless it appeals by submitting a Change Proposal, and on Owner, unless it appeals by filing a Claim.

C. If a submitted matter in question concerns terms and conditions of the Contract Documents that do not involve (1) the performance or acceptability of the Work under the Contract Documents, (2) the design (as set forth in the Drawings, Specifications, or otherwise), or (3) other engineering or technical matters, then Engineer will promptly notify Owner and Contractor in writing that Engineer is unable to provide a decision or interpretation. If Owner and Contractor are unable to agree on resolution of such a matter in question, either party may pursue resolution as provided in Article 12.

3.05 *Reuse of Documents*

A. Contractor and its Subcontractors and Suppliers shall not:

1. have or acquire any title to or ownership rights in any of the Drawings, Specifications, or other documents (or copies of any thereof) prepared by or bearing the seal of Engineer or its consultants, including electronic media versions, or reuse any such Drawings, Specifications, other documents, or copies thereof on extensions of the Project or any other project without written consent of Owner and Engineer and specific written verification or adaptation by Engineer; or

2. have or acquire any title or ownership rights in any other Contract Documents, reuse any such Contract Documents for any purpose without Owner's express written consent, or violate any copyrights pertaining to such Contract Documents.

B. The prohibitions of this Paragraph 3.05 will survive final payment, or termination of the Contract. Nothing herein precludes Contractor from retaining copies of the Contract Documents for record purposes.

Copyright© 2018 National Society of Professional Engineers, American Council of Engineering Companies, and American Society of Civil Engineers. All rights reserved.

ARTICLE 4—COMMENCEMENT AND PROGRESS OF THE WORK

4.01 *Commencement of Contract Times; Notice to Proceed*

A. The Contract Times will commence to run on the 30th day after the Effective Date of the Contract or, if a Notice to Proceed is given, on the day indicated in the Notice to Proceed. A Notice to Proceed may be given at any time within 30 days after the Effective Date of the Contract. In no event will the Contract Times commence to run later than the 60th day after the day of Bid opening or the 30th day after the Effective Date of the Contract, whichever date is earlier.

4.02 *Starting the Work*

A. Contractor shall start to perform the Work on the date when the Contract Times commence to run. No Work may be done at the Site prior to such date.

4.03 *Reference Points*

A. Owner shall provide engineering surveys to establish reference points for construction which in Engineer's judgment are necessary to enable Contractor to proceed with the Work. Contractor shall be responsible for laying out the Work, shall protect and preserve the established reference points and property monuments, and shall make no changes or relocations without the prior written approval of Owner. Contractor shall report to Engineer whenever any reference point or property monument is lost or destroyed or requires relocation because of necessary changes in grades or locations, and shall be responsible for the accurate replacement or relocation of such reference points or property monuments by professionally qualified personnel.

4.04 *Progress Schedule*

A. Contractor shall adhere to the Progress Schedule established in accordance with Paragraph 2.05 as it may be adjusted from time to time as provided below.

1. Contractor shall submit to Engineer for acceptance (to the extent indicated in Paragraph 2.05) proposed adjustments in the Progress Schedule that will not result in changing the Contract Times.

2. Proposed adjustments in the Progress Schedule that will change the Contract Times must be submitted in accordance with the requirements of Article 11.

B. Contractor shall carry on the Work and adhere to the Progress Schedule during all disputes or disagreements with Owner. No Work will be delayed or postponed pending resolution of any disputes or disagreements, or during any appeal process, except as permitted by Paragraph 16.04, or as Owner and Contractor may otherwise agree in writing.

4.05 *Delays in Contractor's Progress*

A. If Owner, Engineer, or anyone for whom Owner is responsible, delays, disrupts, or interferes with the performance or progress of the Work, then Contractor shall be entitled to an equitable adjustment in Contract Price or Contract Times.

B. Contractor shall not be entitled to an adjustment in Contract Price or Contract Times for delay, disruption, or interference caused by or within the control of Contractor. Delay, disruption, and interference attributable to and within the control of a Subcontractor or Supplier shall be deemed to be within the control of Contractor.

Copyright© 2018 National Society of Professional Engineers, American Council of Engineering Companies, and American Society of Civil Engineers. All rights reserved.

C. If Contractor's performance or progress is delayed, disrupted, or interfered with by unanticipated causes not the fault of and beyond the control of Owner, Contractor, and those for which they are responsible, then Contractor shall be entitled to an equitable adjustment in Contract Times. Such an adjustment will be Contractor's sole and exclusive remedy for the delays, disruption, and interference described in this paragraph. Causes of delay, disruption, or interference that may give rise to an adjustment in Contract Times under this paragraph include but are not limited to the following:

1. Severe and unavoidable natural catastrophes such as fires, floods, epidemics, and earthquakes;
2. Abnormal weather conditions;
3. Acts or failures to act of third-party utility owners or other third-party entities (other than those third-party utility owners or other third-party entities performing other work at or adjacent to the Site as arranged by or under contract with Owner, as contemplated in Article 8); and
4. Acts of war or terrorism.

D. Contractor's entitlement to an adjustment of Contract Times or Contract Price is limited as follows:

1. Contractor's entitlement to an adjustment of the Contract Times is conditioned on the delay, disruption, or interference adversely affecting an activity on the critical path to completion of the Work, as of the time of the delay, disruption, or interference.
2. Contractor shall not be entitled to an adjustment in Contract Price for any delay, disruption, or interference if such delay is concurrent with a delay, disruption, or interference caused by or within the control of Contractor. Such a concurrent delay by Contractor shall not preclude an adjustment of Contract Times to which Contractor is otherwise entitled.
3. Adjustments of Contract Times or Contract Price are subject to the provisions of Article 11.

E. Each Contractor request or Change Proposal seeking an increase in Contract Times or Contract Price must be supplemented by supporting data that sets forth in detail the following:

1. The circumstances that form the basis for the requested adjustment;
2. The date upon which each cause of delay, disruption, or interference began to affect the progress of the Work;
3. The date upon which each cause of delay, disruption, or interference ceased to affect the progress of the Work;
4. The number of days' increase in Contract Times claimed as a consequence of each such cause of delay, disruption, or interference; and
5. The impact on Contract Price, in accordance with the provisions of Paragraph 11.07.

Contractor shall also furnish such additional supporting documentation as Owner or Engineer may require including, where appropriate, a revised progress schedule indicating all the activities affected by the delay, disruption, or interference, and an explanation of the

Copyright© 2018 National Society of Professional Engineers, American Council of Engineering Companies, and American Society of Civil Engineers. All rights reserved.

effect of the delay, disruption, or interference on the critical path to completion of the Work.

F. Delays, disruption, and interference to the performance or progress of the Work resulting from the existence of a differing subsurface or physical condition, an Underground Facility that was not shown or indicated by the Contract Documents, or not shown or indicated with reasonable accuracy, and those resulting from Hazardous Environmental Conditions, are governed by Article 5, together with the provisions of Paragraphs 4.05.D and 4.05.E.

G. Paragraph 8.03 addresses delays, disruption, and interference to the performance or progress of the Work resulting from the performance of certain other work at or adjacent to the Site.

ARTICLE 5—SITE; SUBSURFACE AND PHYSICAL CONDITIONS; HAZARDOUS ENVIRONMENTAL CONDITIONS

5.01 *Availability of Lands*

A. Owner shall furnish the Site. Owner shall notify Contractor in writing of any encumbrances or restrictions not of general application but specifically related to use of the Site with which Contractor must comply in performing the Work.

B. Upon reasonable written request, Owner shall furnish Contractor with a current statement of record legal title and legal description of the lands upon which permanent improvements are to be made and Owner's interest therein as necessary for giving notice of or filing a mechanic's or construction lien against such lands in accordance with applicable Laws and Regulations.

C. Contractor shall provide for all additional lands and access thereto that may be required for temporary construction facilities or storage of materials and equipment.

5.02 *Use of Site and Other Areas*

A. *Limitation on Use of Site and Other Areas*

1. Contractor shall confine construction equipment, temporary construction facilities, the storage of materials and equipment, and the operations of workers to the Site, adjacent areas that Contractor has arranged to use through construction easements or otherwise, and other adjacent areas permitted by Laws and Regulations, and shall not unreasonably encumber the Site and such other adjacent areas with construction equipment or other materials or equipment. Contractor shall assume full responsibility for (a) damage to the Site; (b) damage to any such other adjacent areas used for Contractor's operations; (c) damage to any other adjacent land or areas, or to improvements, structures, utilities, or similar facilities located at such adjacent lands or areas; and (d) for injuries and losses sustained by the owners or occupants of any such land or areas; provided that such damage or injuries result from the performance of the Work or from other actions or conduct of the Contractor or those for which Contractor is responsible.

2. If a damage or injury claim is made by the owner or occupant of any such land or area because of the performance of the Work, or because of other actions or conduct of the Contractor or those for which Contractor is responsible, Contractor shall (a) take immediate corrective or remedial action as required by Paragraph 7.13, or otherwise;

Copyright© 2018 National Society of Professional Engineers, American Council of Engineering Companies, and American Society of Civil Engineers. All rights reserved.

(b) promptly attempt to settle the claim as to all parties through negotiations with such owner or occupant, or otherwise resolve the claim by arbitration or other dispute resolution proceeding, or in a court of competent jurisdiction; and (c) to the fullest extent permitted by Laws and Regulations, indemnify and hold harmless Owner and Engineer, and the officers, directors, members, partners, employees, agents, consultants and subcontractors of each and any of them, from and against any such claim, and against all costs, losses, and damages (including but not limited to all fees and charges of engineers, architects, attorneys, and other professionals and all court or arbitration or other dispute resolution costs) arising out of or relating to any claim or action, legal or equitable, brought by any such owner or occupant against Owner, Engineer, or any other party indemnified hereunder to the extent caused directly or indirectly, in whole or in part by, or based upon, Contractor's performance of the Work, or because of other actions or conduct of the Contractor or those for which Contractor is responsible.

B. *Removal of Debris During Performance of the Work*: During the progress of the Work the Contractor shall keep the Site and other adjacent areas free from accumulations of waste materials, rubbish, and other debris. Removal and disposal of such waste materials, rubbish, and other debris will conform to applicable Laws and Regulations.

C. *Cleaning*: Prior to Substantial Completion of the Work Contractor shall clean the Site and the Work and make it ready for utilization by Owner. At the completion of the Work Contractor shall remove from the Site and adjacent areas all tools, appliances, construction equipment and machinery, and surplus materials and shall restore to original condition all property not designated for alteration by the Contract Documents.

D. *Loading of Structures*: Contractor shall not load nor permit any part of any structure to be loaded in any manner that will endanger the structure, nor shall Contractor subject any part of the Work or adjacent structures or land to stresses or pressures that will endanger them.

5.03 *Subsurface and Physical Conditions*

A. *Reports and Drawings*: The Supplementary Conditions identify:

1. Those reports of explorations and tests of subsurface conditions at or adjacent to the Site that contain Technical Data;

2. Those drawings of existing physical conditions at or adjacent to the Site, including those drawings depicting existing surface or subsurface structures at or adjacent to the Site (except Underground Facilities), that contain Technical Data; and

3. Technical Data contained in such reports and drawings.

B. *Underground Facilities*: Underground Facilities are shown or indicated on the Drawings, pursuant to Paragraph 5.05, and not in the drawings referred to in Paragraph 5.03.A. Information and data regarding the presence or location of Underground Facilities are not intended to be categorized, identified, or defined as Technical Data.

C. *Reliance by Contractor on Technical Data*: Contractor may rely upon the accuracy of the Technical Data expressly identified in the Supplementary Conditions with respect to such reports and drawings, but such reports and drawings are not Contract Documents. If no such express identification has been made, then Contractor may rely upon the accuracy of the Technical Data as defined in Paragraph 1.01.A.46.b.

Copyright© 2018 National Society of Professional Engineers, American Council of Engineering Companies, and American Society of Civil Engineers. All rights reserved.

D. *Limitations of Other Data and Documents*: Except for such reliance on Technical Data, Contractor may not rely upon or make any claim against Owner or Engineer, or any of their officers, directors, members, partners, employees, agents, consultants, or subcontractors, with respect to:

1. the completeness of such reports and drawings for Contractor's purposes, including, but not limited to, any aspects of the means, methods, techniques, sequences, and procedures of construction to be employed by Contractor, and safety precautions and programs incident thereto;

2. other data, interpretations, opinions, and information contained in such reports or shown or indicated in such drawings;

3. the contents of other Site-related documents made available to Contractor, such as record drawings from other projects at or adjacent to the Site, or Owner's archival documents concerning the Site; or

4. any Contractor interpretation of or conclusion drawn from any Technical Data or any such other data, interpretations, opinions, or information.

5.04 *Differing Subsurface or Physical Conditions*

A. *Notice by Contractor*: If Contractor believes that any subsurface or physical condition that is uncovered or revealed at the Site:

1. is of such a nature as to establish that any Technical Data on which Contractor is entitled to rely as provided in Paragraph 5.03 is materially inaccurate;

2. is of such a nature as to require a change in the Drawings or Specifications;

3. differs materially from that shown or indicated in the Contract Documents; or

4. is of an unusual nature, and differs materially from conditions ordinarily encountered and generally recognized as inherent in work of the character provided for in the Contract Documents;

then Contractor shall, promptly after becoming aware thereof and before further disturbing the subsurface or physical conditions or performing any Work in connection therewith (except in an emergency as required by Paragraph 7.15), notify Owner and Engineer in writing about such condition. Contractor shall not further disturb such condition or perform any Work in connection therewith (except with respect to an emergency) until receipt of a written statement permitting Contractor to do so.

B. *Engineer's Review*: After receipt of written notice as required by the preceding paragraph, Engineer will promptly review the subsurface or physical condition in question; determine whether it is necessary for Owner to obtain additional exploration or tests with respect to the condition; conclude whether the condition falls within any one or more of the differing site condition categories in Paragraph 5.04.A; obtain any pertinent cost or schedule information from Contractor; prepare recommendations to Owner regarding the Contractor's resumption of Work in connection with the subsurface or physical condition in question and the need for any change in the Drawings or Specifications; and advise Owner in writing of Engineer's findings, conclusions, and recommendations.

C. *Owner's Statement to Contractor Regarding Site Condition*: After receipt of Engineer's written findings, conclusions, and recommendations, Owner shall issue a written statement

Copyright© 2018 National Society of Professional Engineers, American Council of Engineering Companies, and American Society of Civil Engineers. All rights reserved.

to Contractor (with a copy to Engineer) regarding the subsurface or physical condition in question, addressing the resumption of Work in connection with such condition, indicating whether any change in the Drawings or Specifications will be made, and adopting or rejecting Engineer's written findings, conclusions, and recommendations, in whole or in part.

D. *Early Resumption of Work*: If at any time Engineer determines that Work in connection with the subsurface or physical condition in question may resume prior to completion of Engineer's review or Owner's issuance of its statement to Contractor, because the condition in question has been adequately documented, and analyzed on a preliminary basis, then the Engineer may at its discretion instruct Contractor to resume such Work.

E. *Possible Price and Times Adjustments*

1. Contractor shall be entitled to an equitable adjustment in Contract Price or Contract Times, to the extent that the existence of a differing subsurface or physical condition, or any related delay, disruption, or interference, causes an increase or decrease in Contractor's cost of, or time required for, performance of the Work; subject, however, to the following:

    a. Such condition must fall within any one or more of the categories described in Paragraph 5.04.A;

    b. With respect to Work that is paid for on a unit price basis, any adjustment in Contract Price will be subject to the provisions of Paragraph 13.03; and,

    c. Contractor's entitlement to an adjustment of the Contract Times is subject to the provisions of Paragraphs 4.05.D and 4.05.E.

2. Contractor shall not be entitled to any adjustment in the Contract Price or Contract Times with respect to a subsurface or physical condition if:

    a. Contractor knew of the existence of such condition at the time Contractor made a commitment to Owner with respect to Contract Price and Contract Times by the submission of a Bid or becoming bound under a negotiated contract, or otherwise;

    b. The existence of such condition reasonably could have been discovered or revealed as a result of any examination, investigation, exploration, test, or study of the Site and contiguous areas expressly required by the Bidding Requirements or Contract Documents to be conducted by or for Contractor prior to Contractor's making such commitment; or

    c. Contractor failed to give the written notice required by Paragraph 5.04.A.

3. If Owner and Contractor agree regarding Contractor's entitlement to and the amount or extent of any adjustment in the Contract Price or Contract Times, then any such adjustment will be set forth in a Change Order.

4. Contractor may submit a Change Proposal regarding its entitlement to or the amount or extent of any adjustment in the Contract Price or Contract Times, no later than 30 days after Owner's issuance of the Owner's written statement to Contractor regarding the subsurface or physical condition in question.

F. *Underground Facilities; Hazardous Environmental Conditions*: Paragraph 5.05 governs rights and responsibilities regarding the presence or location of Underground Facilities.

Copyright© 2018 National Society of Professional Engineers, American Council of Engineering Companies, and American Society of Civil Engineers. All rights reserved.

Paragraph 5.06 governs rights and responsibilities regarding Hazardous Environmental Conditions. The provisions of Paragraphs 5.03 and 5.04 are not applicable to the presence or location of Underground Facilities, or to Hazardous Environmental Conditions.

5.05 *Underground Facilities*

A. *Contractor's Responsibilities*: Unless it is otherwise expressly provided in the Supplementary Conditions, the cost of all of the following are included in the Contract Price, and Contractor shall have full responsibility for:

1. reviewing and checking all information and data regarding existing Underground Facilities at the Site;

2. complying with applicable state and local utility damage prevention Laws and Regulations;

3. verifying the actual location of those Underground Facilities shown or indicated in the Contract Documents as being within the area affected by the Work, by exposing such Underground Facilities during the course of construction;

4. coordination of the Work with the owners (including Owner) of such Underground Facilities, during construction; and

5. the safety and protection of all existing Underground Facilities at the Site, and repairing any damage thereto resulting from the Work.

B. *Notice by Contractor*: If Contractor believes that an Underground Facility that is uncovered or revealed at the Site was not shown or indicated on the Drawings, or was not shown or indicated on the Drawings with reasonable accuracy, then Contractor shall, promptly after becoming aware thereof and before further disturbing conditions affected thereby or performing any Work in connection therewith (except in an emergency as required by Paragraph 7.15), notify Owner and Engineer in writing regarding such Underground Facility.

C. *Engineer's Review*: Engineer will:

1. promptly review the Underground Facility and conclude whether such Underground Facility was not shown or indicated on the Drawings, or was not shown or indicated with reasonable accuracy;

2. identify and communicate with the owner of the Underground Facility; prepare recommendations to Owner (and if necessary issue any preliminary instructions to Contractor) regarding the Contractor's resumption of Work in connection with the Underground Facility in question;

3. obtain any pertinent cost or schedule information from Contractor; determine the extent, if any, to which a change is required in the Drawings or Specifications to reflect and document the consequences of the existence or location of the Underground Facility; and

4. advise Owner in writing of Engineer's findings, conclusions, and recommendations.

During such time, Contractor shall be responsible for the safety and protection of such Underground Facility.

D. *Owner's Statement to Contractor Regarding Underground Facility*: After receipt of Engineer's written findings, conclusions, and recommendations, Owner shall issue a written

Copyright© 2018 National Society of Professional Engineers, American Council of Engineering Companies, and American Society of Civil Engineers. All rights reserved.

statement to Contractor (with a copy to Engineer) regarding the Underground Facility in question addressing the resumption of Work in connection with such Underground Facility, indicating whether any change in the Drawings or Specifications will be made, and adopting or rejecting Engineer's written findings, conclusions, and recommendations in whole or in part.

E. *Early Resumption of Work*: If at any time Engineer determines that Work in connection with the Underground Facility may resume prior to completion of Engineer's review or Owner's issuance of its statement to Contractor, because the Underground Facility in question and conditions affected by its presence have been adequately documented, and analyzed on a preliminary basis, then the Engineer may at its discretion instruct Contractor to resume such Work.

F. *Possible Price and Times Adjustments*

1. Contractor shall be entitled to an equitable adjustment in the Contract Price or Contract Times, to the extent that any existing Underground Facility at the Site that was not shown or indicated on the Drawings, or was not shown or indicated with reasonable accuracy, or any related delay, disruption, or interference, causes an increase or decrease in Contractor's cost of, or time required for, performance of the Work; subject, however, to the following:

    a. With respect to Work that is paid for on a unit price basis, any adjustment in Contract Price will be subject to the provisions of Paragraph 13.03;

    b. Contractor's entitlement to an adjustment of the Contract Times is subject to the provisions of Paragraphs 4.05.D and 4.05.E; and

    c. Contractor gave the notice required in Paragraph 5.05.B.

2. If Owner and Contractor agree regarding Contractor's entitlement to and the amount or extent of any adjustment in the Contract Price or Contract Times, then any such adjustment will be set forth in a Change Order.

3. Contractor may submit a Change Proposal regarding its entitlement to or the amount or extent of any adjustment in the Contract Price or Contract Times, no later than 30 days after Owner's issuance of the Owner's written statement to Contractor regarding the Underground Facility in question.

4. The information and data shown or indicated on the Drawings with respect to existing Underground Facilities at the Site is based on information and data (a) furnished by the owners of such Underground Facilities, or by others, (b) obtained from available records, or (c) gathered in an investigation conducted in accordance with the current edition of ASCE 38, Standard Guideline for the Collection and Depiction of Existing Subsurface Utility Data, by the American Society of Civil Engineers. If such information or data is incorrect or incomplete, Contractor's remedies are limited to those set forth in this Paragraph 5.05.F.

5.06 *Hazardous Environmental Conditions at Site*

A. *Reports and Drawings*: The Supplementary Conditions identify:

1. those reports known to Owner relating to Hazardous Environmental Conditions that have been identified at or adjacent to the Site;

Copyright© 2018 National Society of Professional Engineers, American Council of Engineering Companies, and American Society of Civil Engineers. All rights reserved.

2. drawings known to Owner relating to Hazardous Environmental Conditions that have been identified at or adjacent to the Site; and

3. Technical Data contained in such reports and drawings.

B. *Reliance by Contractor on Technical Data Authorized*: Contractor may rely upon the accuracy of the Technical Data expressly identified in the Supplementary Conditions with respect to such reports and drawings, but such reports and drawings are not Contract Documents. If no such express identification has been made, then Contractor may rely on the accuracy of the Technical Data as defined in Paragraph 1.01.A.46.b. Except for such reliance on Technical Data, Contractor may not rely upon or make any claim against Owner or Engineer, or any of their officers, directors, members, partners, employees, agents, consultants, or subcontractors, with respect to:

1. the completeness of such reports and drawings for Contractor's purposes, including, but not limited to, any aspects of the means, methods, techniques, sequences and procedures of construction to be employed by Contractor, and safety precautions and programs incident thereto;

2. other data, interpretations, opinions, and information contained in such reports or shown or indicated in such drawings; or

3. any Contractor interpretation of or conclusion drawn from any Technical Data or any such other data, interpretations, opinions or information.

C. Contractor shall not be responsible for removing or remediating any Hazardous Environmental Condition encountered, uncovered, or revealed at the Site unless such removal or remediation is expressly identified in the Contract Documents to be within the scope of the Work.

D. Contractor shall be responsible for controlling, containing, and duly removing all Constituents of Concern brought to the Site by Contractor, Subcontractors, Suppliers, or anyone else for whom Contractor is responsible, and for any associated costs; and for the costs of removing and remediating any Hazardous Environmental Condition created by the presence of any such Constituents of Concern.

E. If Contractor encounters, uncovers, or reveals a Hazardous Environmental Condition whose removal or remediation is not expressly identified in the Contract Documents as being within the scope of the Work, or if Contractor or anyone for whom Contractor is responsible creates a Hazardous Environmental Condition, then Contractor shall immediately: (1) secure or otherwise isolate such condition; (2) stop all Work in connection with such condition and in any area affected thereby (except in an emergency as required by Paragraph 7.15); and (3) notify Owner and Engineer (and promptly thereafter confirm such notice in writing). Owner shall promptly consult with Engineer concerning the necessity for Owner to retain a qualified expert to evaluate such condition or take corrective action, if any. Promptly after consulting with Engineer, Owner shall take such actions as are necessary to permit Owner to timely obtain required permits and provide Contractor the written notice required by Paragraph 5.06.F. If Contractor or anyone for whom Contractor is responsible created the Hazardous Environmental Condition in question, then Owner may remove and remediate the Hazardous Environmental Condition, and impose a set-off against payments to account for the associated costs.

Copyright© 2018 National Society of Professional Engineers, American Council of Engineering Companies, and American Society of Civil Engineers. All rights reserved.

F. Contractor shall not resume Work in connection with such Hazardous Environmental Condition or in any affected area until after Owner has obtained any required permits related thereto, and delivered written notice to Contractor either (1) specifying that such condition and any affected area is or has been rendered safe for the resumption of Work, or (2) specifying any special conditions under which such Work may be resumed safely.

G. If Owner and Contractor cannot agree as to entitlement to or on the amount or extent, if any, of any adjustment in Contract Price or Contract Times, as a result of such Work stoppage, such special conditions under which Work is agreed to be resumed by Contractor, or any costs or expenses incurred in response to the Hazardous Environmental Condition, then within 30 days of Owner's written notice regarding the resumption of Work, Contractor may submit a Change Proposal, or Owner may impose a set-off. Entitlement to any such adjustment is subject to the provisions of Paragraphs 4.05.D, 4.05.E, 11.07, and 11.08.

H. If, after receipt of such written notice, Contractor does not agree to resume such Work based on a reasonable belief it is unsafe, or does not agree to resume such Work under such special conditions, then Owner may order the portion of the Work that is in the area affected by such condition to be deleted from the Work, following the contractual change procedures in Article 11. Owner may have such deleted portion of the Work performed by Owner's own forces or others in accordance with Article 8.

I. To the fullest extent permitted by Laws and Regulations, Owner shall indemnify and hold harmless Contractor, Subcontractors, and Engineer, and the officers, directors, members, partners, employees, agents, consultants, and subcontractors of each and any of them, from and against all claims, costs, losses, and damages (including but not limited to all fees and charges of engineers, architects, attorneys, and other professionals, and all court, arbitration, or other dispute resolution costs) arising out of or relating to a Hazardous Environmental Condition, provided that such Hazardous Environmental Condition (1) was not shown or indicated in the Drawings, Specifications, or other Contract Documents, identified as Technical Data entitled to limited reliance pursuant to Paragraph 5.06.B, or identified in the Contract Documents to be included within the scope of the Work, and (2) was not created by Contractor or by anyone for whom Contractor is responsible. Nothing in this Paragraph 5.06.I obligates Owner to indemnify any individual or entity from and against the consequences of that individual's or entity's own negligence.

J. To the fullest extent permitted by Laws and Regulations, Contractor shall indemnify and hold harmless Owner and Engineer, and the officers, directors, members, partners, employees, agents, consultants, and subcontractors of each and any of them, from and against all claims, costs, losses, and damages (including but not limited to all fees and charges of engineers, architects, attorneys, and other professionals and all court or arbitration or other dispute resolution costs) arising out of or relating to the failure to control, contain, or remove a Constituent of Concern brought to the Site by Contractor or by anyone for whom Contractor is responsible, or to a Hazardous Environmental Condition created by Contractor or by anyone for whom Contractor is responsible. Nothing in this Paragraph 5.06.J obligates Contractor to indemnify any individual or entity from and against the consequences of that individual's or entity's own negligence.

K. The provisions of Paragraphs 5.03, 5.04, and 5.05 do not apply to the presence of Constituents of Concern or to a Hazardous Environmental Condition uncovered or revealed at the Site.

Copyright© 2018 National Society of Professional Engineers, American Council of Engineering Companies, and American Society of Civil Engineers. All rights reserved.

ARTICLE 6—BONDS AND INSURANCE

6.01 *Performance, Payment, and Other Bonds*

A. Contractor shall furnish a performance bond and a payment bond, each in an amount at least equal to the Contract Price, as security for the faithful performance and payment of Contractor's obligations under the Contract. These bonds must remain in effect until one year after the date when final payment becomes due or until completion of the correction period specified in Paragraph 15.08, whichever is later, except as provided otherwise by Laws or Regulations, the terms of a prescribed bond form, the Supplementary Conditions, or other provisions of the Contract.

B. Contractor shall also furnish such other bonds (if any) as are required by the Supplementary Conditions or other provisions of the Contract.

C. All bonds must be in the form included in the Bidding Documents or otherwise specified by Owner prior to execution of the Contract, except as provided otherwise by Laws or Regulations, and must be issued and signed by a surety named in "Companies Holding Certificates of Authority as Acceptable Sureties on Federal Bonds and as Acceptable Reinsuring Companies" as published in Department Circular 570 (as amended and supplemented) by the Bureau of the Fiscal Service, U.S. Department of the Treasury. A bond signed by an agent or attorney-in-fact must be accompanied by a certified copy of that individual's authority to bind the surety. The evidence of authority must show that it is effective on the date the agent or attorney-in-fact signed the accompanying bond.

D. Contractor shall obtain the required bonds from surety companies that are duly licensed or authorized, in the state or jurisdiction in which the Project is located, to issue bonds in the required amounts.

E. If the surety on a bond furnished by Contractor is declared bankrupt or becomes insolvent, or the surety ceases to meet the requirements above, then Contractor shall promptly notify Owner and Engineer in writing and shall, within 20 days after the event giving rise to such notification, provide another bond and surety, both of which must comply with the bond and surety requirements above.

F. If Contractor has failed to obtain a required bond, Owner may exclude the Contractor from the Site and exercise Owner's termination rights under Article 16.

G. Upon request to Owner from any Subcontractor, Supplier, or other person or entity claiming to have furnished labor, services, materials, or equipment used in the performance of the Work, Owner shall provide a copy of the payment bond to such person or entity.

H. Upon request to Contractor from any Subcontractor, Supplier, or other person or entity claiming to have furnished labor, services, materials, or equipment used in the performance of the Work, Contractor shall provide a copy of the payment bond to such person or entity.

6.02 *Insurance—General Provisions*

A. Owner and Contractor shall obtain and maintain insurance as required in this article and in the Supplementary Conditions.

B. All insurance required by the Contract to be purchased and maintained by Owner or Contractor shall be obtained from insurance companies that are duly licensed or authorized in the state or jurisdiction in which the Project is located to issue insurance policies for the

Copyright© 2018 National Society of Professional Engineers, American Council of Engineering Companies, and American Society of Civil Engineers. All rights reserved.

required limits and coverages. Unless a different standard is indicated in the Supplementary Conditions, all companies that provide insurance policies required under this Contract shall have an A.M. Best rating of A-VII or better.

C. Alternative forms of insurance coverage, including but not limited to self-insurance and "Occupational Accident and Excess Employer's Indemnity Policies," are not sufficient to meet the insurance requirements of this Contract, unless expressly allowed in the Supplementary Conditions.

D. Contractor shall deliver to Owner, with copies to each additional insured identified in the Contract, certificates of insurance and endorsements establishing that Contractor has obtained and is maintaining the policies and coverages required by the Contract. Upon request by Owner or any other insured, Contractor shall also furnish other evidence of such required insurance, including but not limited to copies of policies, documentation of applicable self-insured retentions (if allowed) and deductibles, full disclosure of all relevant exclusions, and evidence of insurance required to be purchased and maintained by Subcontractors or Suppliers. In any documentation furnished under this provision, Contractor, Subcontractors, and Suppliers may block out (redact) (1) any confidential premium or pricing information and (2) any wording specific to a project or jurisdiction other than those applicable to this Contract.

E. Owner shall deliver to Contractor, with copies to each additional insured identified in the Contract, certificates of insurance and endorsements establishing that Owner has obtained and is maintaining the policies and coverages required of Owner by the Contract (if any). Upon request by Contractor or any other insured, Owner shall also provide other evidence of such required insurance (if any), including but not limited to copies of policies, documentation of applicable self-insured retentions (if allowed) and deductibles, and full disclosure of all relevant exclusions. In any documentation furnished under this provision, Owner may block out (redact) (1) any confidential premium or pricing information and (2) any wording specific to a project or jurisdiction other than those relevant to this Contract.

F. Failure of Owner or Contractor to demand such certificates or other evidence of the other party's full compliance with these insurance requirements, or failure of Owner or Contractor to identify a deficiency in compliance from the evidence provided, will not be construed as a waiver of the other party's obligation to obtain and maintain such insurance.

G. In addition to the liability insurance required to be provided by Contractor, the Owner, at Owner's option, may purchase and maintain Owner's own liability insurance. Owner's liability policies, if any, operate separately and independently from policies required to be provided by Contractor, and Contractor cannot rely upon Owner's liability policies for any of Contractor's obligations to the Owner, Engineer, or third parties.

H. Contractor shall require:

1. Subcontractors to purchase and maintain worker's compensation, commercial general liability, and other insurance that is appropriate for their participation in the Project, and to name as additional insureds Owner and Engineer (and any other individuals or entities identified in the Supplementary Conditions as additional insureds on Contractor's liability policies) on each Subcontractor's commercial general liability insurance policy; and

Copyright© 2018 National Society of Professional Engineers, American Council of Engineering Companies, and American Society of Civil Engineers. All rights reserved.

2. Suppliers to purchase and maintain insurance that is appropriate for their participation in the Project.

I. If either party does not purchase or maintain the insurance required of such party by the Contract, such party shall notify the other party in writing of such failure to purchase prior to the start of the Work, or of such failure to maintain prior to any change in the required coverage.

J. If Contractor has failed to obtain and maintain required insurance, Contractor's entitlement to enter or remain at the Site will end immediately, and Owner may impose an appropriate set-off against payment for any associated costs (including but not limited to the cost of purchasing necessary insurance coverage), and exercise Owner's termination rights under Article 16.

K. Without prejudice to any other right or remedy, if a party has failed to obtain required insurance, the other party may elect (but is in no way obligated) to obtain equivalent insurance to protect such other party's interests at the expense of the party who was required to provide such coverage, and the Contract Price will be adjusted accordingly.

L. Owner does not represent that insurance coverage and limits established in this Contract necessarily will be adequate to protect Contractor or Contractor's interests. Contractor is responsible for determining whether such coverage and limits are adequate to protect its interests, and for obtaining and maintaining any additional insurance that Contractor deems necessary.

M. The insurance and insurance limits required herein will not be deemed as a limitation on Contractor's liability, or that of its Subcontractors or Suppliers, under the indemnities granted to Owner and other individuals and entities in the Contract or otherwise.

N. All the policies of insurance required to be purchased and maintained under this Contract will contain a provision or endorsement that the coverage afforded will not be canceled, or renewal refused, until at least 10 days prior written notice has been given to the purchasing policyholder. Within three days of receipt of any such written notice, the purchasing policyholder shall provide a copy of the notice to each other insured and Engineer.

6.03 *Contractor's Insurance*

A. *Required Insurance*: Contractor shall purchase and maintain Worker's Compensation, Commercial General Liability, and other insurance pursuant to the specific requirements of the Supplementary Conditions.

B. *General Provisions*: The policies of insurance required by this Paragraph 6.03 as supplemented must:

1. include at least the specific coverages required;

2. be written for not less than the limits provided, or those required by Laws or Regulations, whichever is greater;

3. remain in effect at least until the Work is complete (as set forth in Paragraph 15.06.D), and longer if expressly required elsewhere in this Contract, and at all times thereafter when Contractor may be correcting, removing, or replacing defective Work as a warranty or correction obligation, or otherwise, or returning to the Site to conduct other tasks arising from the Contract;

Copyright© 2018 National Society of Professional Engineers, American Council of Engineering Companies, and American Society of Civil Engineers. All rights reserved.

4. apply with respect to the performance of the Work, whether such performance is by Contractor, any Subcontractor or Supplier, or by anyone directly or indirectly employed by any of them to perform any of the Work, or by anyone for whose acts any of them may be liable; and

5. include all necessary endorsements to support the stated requirements.

C. *Additional Insureds*: The Contractor's commercial general liability, automobile liability, employer's liability, umbrella or excess, pollution liability, and unmanned aerial vehicle liability policies, if required by this Contract, must:

1. include and list as additional insureds Owner and Engineer, and any individuals or entities identified as additional insureds in the Supplementary Conditions;

2. include coverage for the respective officers, directors, members, partners, employees, and consultants of all such additional insureds;

3. afford primary coverage to these additional insureds for all claims covered thereby (including as applicable those arising from both ongoing and completed operations);

4. not seek contribution from insurance maintained by the additional insured; and

5. as to commercial general liability insurance, apply to additional insureds with respect to liability caused in whole or in part by Contractor's acts or omissions, or the acts and omissions of those working on Contractor's behalf, in the performance of Contractor's operations.

6.04 *Builder's Risk and Other Property Insurance*

A. *Builder's Risk*: Unless otherwise provided in the Supplementary Conditions, Contractor shall purchase and maintain builder's risk insurance upon the Work on a completed value basis, in the amount of the Work's full insurable replacement cost (subject to such deductible amounts as may be provided in the Supplementary Conditions or required by Laws and Regulations). The specific requirements applicable to the builder's risk insurance are set forth in the Supplementary Conditions.

B. *Property Insurance for Facilities of Owner Where Work Will Occur*: Owner is responsible for obtaining and maintaining property insurance covering each existing structure, building, or facility in which any part of the Work will occur, or to which any part of the Work will attach or be adjoined. Such property insurance will be written on a special perils (all-risk) form, on a replacement cost basis, providing coverage consistent with that required for the builder's risk insurance, and will be maintained until the Work is complete, as set forth in Paragraph 15.06.D.

C. *Property Insurance for Substantially Complete Facilities*: Promptly after Substantial Completion, and before actual occupancy or use of the substantially completed Work, Owner will obtain property insurance for such substantially completed Work, and maintain such property insurance at least until the Work is complete, as set forth in Paragraph 15.06.D. Such property insurance will be written on a special perils (all-risk) form, on a replacement cost basis, and provide coverage consistent with that required for the builder's risk insurance. The builder's risk insurance may terminate upon written confirmation of Owner's procurement of such property insurance.

Copyright© 2018 National Society of Professional Engineers, American Council of Engineering Companies, and American Society of Civil Engineers. All rights reserved.

D. *Partial Occupancy or Use by Owner*: If Owner will occupy or use a portion or portions of the Work prior to Substantial Completion of all the Work, as provided in Paragraph 15.04, then Owner (directly, if it is the purchaser of the builder's risk policy, or through Contractor) will provide advance notice of such occupancy or use to the builder's risk insurer, and obtain an endorsement consenting to the continuation of coverage prior to commencing such partial occupancy or use.

E. *Insurance of Other Property; Additional Insurance*: If the express insurance provisions of the Contract do not require or address the insurance of a property item or interest, then the entity or individual owning such property item will be responsible for insuring it. If Contractor elects to obtain other special insurance to be included in or supplement the builder's risk or property insurance policies provided under this Paragraph 6.04, it may do so at Contractor's expense.

6.05 *Property Losses; Subrogation*

A. The builder's risk insurance policy purchased and maintained in accordance with Paragraph 6.04 (or an installation floater policy if authorized by the Supplementary Conditions), will contain provisions to the effect that in the event of payment of any loss or damage the insurer will have no rights of recovery against any insureds thereunder, or against Engineer or its consultants, or their officers, directors, members, partners, employees, agents, consultants, or subcontractors.

1. Owner and Contractor waive all rights against each other and the respective officers, directors, members, partners, employees, agents, consultants, and subcontractors of each and any of them, for all losses and damages caused by, arising out of, or resulting from any of the perils, risks, or causes of loss covered by such policies and any other property insurance applicable to the Work; and, in addition, waive all such rights against Engineer, its consultants, all individuals or entities identified in the Supplementary Conditions as builder's risk or installation floater insureds, and the officers, directors, members, partners, employees, agents, consultants, and subcontractors of each and any of them, under such policies for losses and damages so caused.

2. None of the above waivers extends to the rights that any party making such waiver may have to the proceeds of insurance held by Owner or Contractor as trustee or fiduciary, or otherwise payable under any policy so issued.

B. Any property insurance policy maintained by Owner covering any loss, damage, or consequential loss to Owner's existing structures, buildings, or facilities in which any part of the Work will occur, or to which any part of the Work will attach or adjoin; to adjacent structures, buildings, or facilities of Owner; or to part or all of the completed or substantially completed Work, during partial occupancy or use pursuant to Paragraph 15.04, after Substantial Completion pursuant to Paragraph 15.03, or after final payment pursuant to Paragraph 15.06, will contain provisions to the effect that in the event of payment of any loss or damage the insurer will have no rights of recovery against any insureds thereunder, or against Contractor, Subcontractors, or Engineer, or the officers, directors, members, partners, employees, agents, consultants, or subcontractors of each and any of them, and that the insured is allowed to waive the insurer's rights of subrogation in a written contract executed prior to the loss, damage, or consequential loss.

Copyright© 2018 National Society of Professional Engineers, American Council of Engineering Companies, and American Society of Civil Engineers. All rights reserved.

1. Owner waives all rights against Contractor, Subcontractors, and Engineer, and the officers, directors, members, partners, employees, agents, consultants and subcontractors of each and any of them, for all losses and damages caused by, arising out of, or resulting from fire or any of the perils, risks, or causes of loss covered by such policies.

C. The waivers in this Paragraph 6.05 include the waiver of rights due to business interruption, loss of use, or other consequential loss extending beyond direct physical loss or damage to Owner's property or the Work caused by, arising out of, or resulting from fire or other insured peril, risk, or cause of loss.

D. Contractor shall be responsible for assuring that each Subcontract contains provisions whereby the Subcontractor waives all rights against Owner, Contractor, all individuals or entities identified in the Supplementary Conditions as insureds, the Engineer and its consultants, and the officers, directors, members, partners, employees, agents, consultants, and subcontractors of each and any of them, for all losses and damages caused by, arising out of, relating to, or resulting from fire or other peril, risk, or cause of loss covered by builder's risk insurance, installation floater, and any other property insurance applicable to the Work.

6.06 *Receipt and Application of Property Insurance Proceeds*

A. Any insured loss under the builder's risk and other policies of property insurance required by Paragraph 6.04 will be adjusted and settled with the named insured that purchased the policy. Such named insured shall act as fiduciary for the other insureds, and give notice to such other insureds that adjustment and settlement of a claim is in progress. Any other insured may state its position regarding a claim for insured loss in writing within 15 days after notice of such claim.

B. Proceeds for such insured losses may be made payable by the insurer either jointly to multiple insureds, or to the named insured that purchased the policy in its own right and as fiduciary for other insureds, subject to the requirements of any applicable mortgage clause. A named insured receiving insurance proceeds under the builder's risk and other policies of insurance required by Paragraph 6.04 shall maintain such proceeds in a segregated account, and distribute such proceeds in accordance with such agreement as the parties in interest may reach, or as otherwise required under the dispute resolution provisions of this Contract or applicable Laws and Regulations.

C. If no other special agreement is reached, Contractor shall repair or replace the damaged Work, using allocated insurance proceeds.

ARTICLE 7—CONTRACTOR'S RESPONSIBILITIES

7.01 *Contractor's Means and Methods of Construction*

A. Contractor shall be solely responsible for the means, methods, techniques, sequences, and procedures of construction.

B. If the Contract Documents note, or Contractor determines, that professional engineering or other design services are needed to carry out Contractor's responsibilities for construction means, methods, techniques, sequences, and procedures, or for Site safety, then Contractor shall cause such services to be provided by a properly licensed design professional, at

Copyright© 2018 National Society of Professional Engineers, American Council of Engineering Companies, and American Society of Civil Engineers. All rights reserved.

Contractor's expense. Such services are not Owner-delegated professional design services under this Contract, and neither Owner nor Engineer has any responsibility with respect to (1) Contractor's determination of the need for such services, (2) the qualifications or licensing of the design professionals retained or employed by Contractor, (3) the performance of such services, or (4) any errors, omissions, or defects in such services.

7.02 *Supervision and Superintendence*

A. Contractor shall supervise, inspect, and direct the Work competently and efficiently, devoting such attention thereto and applying such skills and expertise as may be necessary to perform the Work in accordance with the Contract Documents.

B. At all times during the progress of the Work, Contractor shall assign a competent resident superintendent who will not be replaced without written notice to Owner and Engineer except under extraordinary circumstances.

7.03 *Labor; Working Hours*

A. Contractor shall provide competent, suitably qualified personnel to survey and lay out the Work and perform construction as required by the Contract Documents. Contractor shall maintain good discipline and order at the Site.

B. Contractor shall be fully responsible to Owner and Engineer for all acts and omissions of Contractor's employees; of Suppliers and Subcontractors, and their employees; and of any other individuals or entities performing or furnishing any of the Work, just as Contractor is responsible for Contractor's own acts and omissions.

C. Except as otherwise required for the safety or protection of persons or the Work or property at the Site or adjacent thereto, and except as otherwise stated in the Contract Documents, all Work at the Site will be performed during regular working hours, Monday through Friday. Contractor will not perform Work on a Saturday, Sunday, or any legal holiday. Contractor may perform Work outside regular working hours or on Saturdays, Sundays, or legal holidays only with Owner's written consent, which will not be unreasonably withheld.

7.04 *Services, Materials, and Equipment*

A. Unless otherwise specified in the Contract Documents, Contractor shall provide and assume full responsibility for all services, materials, equipment, labor, transportation, construction equipment and machinery, tools, appliances, fuel, power, light, heat, telephone, water, sanitary facilities, temporary facilities, and all other facilities and incidentals necessary for the performance, testing, start up, and completion of the Work, whether or not such items are specifically called for in the Contract Documents.

B. All materials and equipment incorporated into the Work must be new and of good quality, except as otherwise provided in the Contract Documents. All special warranties and guarantees required by the Specifications will expressly run to the benefit of Owner. If required by Engineer, Contractor shall furnish satisfactory evidence (including reports of required tests) as to the source, kind, and quality of materials and equipment.

C. All materials and equipment must be stored, applied, installed, connected, erected, protected, used, cleaned, and conditioned in accordance with instructions of the applicable Supplier, except as otherwise may be provided in the Contract Documents.

Copyright© 2018 National Society of Professional Engineers, American Council of Engineering Companies, and American Society of Civil Engineers. All rights reserved.

7.05 *"Or Equals"*

A. *Contractor's Request; Governing Criteria*: Whenever an item of equipment or material is specified or described in the Contract Documents by using the names of one or more proprietary items or specific Suppliers, the Contract Price has been based upon Contractor furnishing such item as specified. The specification or description of such an item is intended to establish the type, function, appearance, and quality required. Unless the specification or description contains or is followed by words reading that no like, equivalent, or "or equal" item is permitted, Contractor may request that Engineer authorize the use of other items of equipment or material, or items from other proposed Suppliers, under the circumstances described below.

1. If Engineer in its sole discretion determines that an item of equipment or material proposed by Contractor is functionally equal to that named and sufficiently similar so that no change in related Work will be required, Engineer will deem it an "or equal" item. For the purposes of this paragraph, a proposed item of equipment or material will be considered functionally equal to an item so named if:

    a. in the exercise of reasonable judgment Engineer determines that the proposed item:

        1) is at least equal in materials of construction, quality, durability, appearance, strength, and design characteristics;

        2) will reliably perform at least equally well the function and achieve the results imposed by the design concept of the completed Project as a functioning whole;

        3) has a proven record of performance and availability of responsive service; and

        4) is not objectionable to Owner.

    b. Contractor certifies that, if the proposed item is approved and incorporated into the Work:

        1) there will be no increase in cost to the Owner or increase in Contract Times; and

        2) the item will conform substantially to the detailed requirements of the item named in the Contract Documents.

B. *Contractor's Expense*: Contractor shall provide all data in support of any proposed "or equal" item at Contractor's expense.

C. *Engineer's Evaluation and Determination*: Engineer will be allowed a reasonable time to evaluate each "or-equal" request. Engineer may require Contractor to furnish additional data about the proposed "or-equal" item. Engineer will be the sole judge of acceptability. No "or-equal" item will be ordered, furnished, installed, or utilized until Engineer's review is complete and Engineer determines that the proposed item is an "or-equal," which will be evidenced by an approved Shop Drawing or other written communication. Engineer will advise Contractor in writing of any negative determination.

D. *Effect of Engineer's Determination*: Neither approval nor denial of an "or-equal" request will result in any change in Contract Price. The Engineer's denial of an "or-equal" request will be final and binding, and may not be reversed through an appeal under any provision of the Contract.

Copyright© 2018 National Society of Professional Engineers, American Council of Engineering Companies, and American Society of Civil Engineers. All rights reserved.

E. *Treatment as a Substitution Request*: If Engineer determines that an item of equipment or material proposed by Contractor does not qualify as an "or-equal" item, Contractor may request that Engineer consider the item a proposed substitute pursuant to Paragraph 7.06.

7.06 *Substitutes*

A. *Contractor's Request; Governing Criteria*: Unless the specification or description of an item of equipment or material required to be furnished under the Contract Documents contains or is followed by words reading that no substitution is permitted, Contractor may request that Engineer authorize the use of other items of equipment or material under the circumstances described below. To the extent possible such requests must be made before commencement of related construction at the Site.

1. Contractor shall submit sufficient information as provided below to allow Engineer to determine if the item of material or equipment proposed is functionally equivalent to that named and an acceptable substitute therefor. Engineer will not accept requests for review of proposed substitute items of equipment or material from anyone other than Contractor.

2. The requirements for review by Engineer will be as set forth in Paragraph 7.06.B, as supplemented by the Specifications, and as Engineer may decide is appropriate under the circumstances.

3. Contractor shall make written application to Engineer for review of a proposed substitute item of equipment or material that Contractor seeks to furnish or use. The application:

   a. will certify that the proposed substitute item will:

      1) perform adequately the functions and achieve the results called for by the general design;

      2) be similar in substance to the item specified; and

      3) be suited to the same use as the item specified.

   b. will state:

      1) the extent, if any, to which the use of the proposed substitute item will necessitate a change in Contract Times;

      2) whether use of the proposed substitute item in the Work will require a change in any of the Contract Documents (or in the provisions of any other direct contract with Owner for other work on the Project) to adapt the design to the proposed substitute item; and

      3) whether incorporation or use of the proposed substitute item in connection with the Work is subject to payment of any license fee or royalty.

   c. will identify:

      1) all variations of the proposed substitute item from the item specified; and

      2) available engineering, sales, maintenance, repair, and replacement services.

   d. will contain an itemized estimate of all costs or credits that will result directly or indirectly from use of such substitute item, including but not limited to changes in

Copyright© 2018 National Society of Professional Engineers, American Council of Engineering Companies, and American Society of Civil Engineers. All rights reserved.

Contract Price, shared savings, costs of redesign, and claims of other contractors affected by any resulting change.

B. *Engineer's Evaluation and Determination*: Engineer will be allowed a reasonable time to evaluate each substitute request, and to obtain comments and direction from Owner. Engineer may require Contractor to furnish additional data about the proposed substitute item. Engineer will be the sole judge of acceptability. No substitute will be ordered, furnished, installed, or utilized until Engineer's review is complete and Engineer determines that the proposed item is an acceptable substitute. Engineer's determination will be evidenced by a Field Order or a proposed Change Order accounting for the substitution itself and all related impacts, including changes in Contract Price or Contract Times. Engineer will advise Contractor in writing of any negative determination.

C. *Special Guarantee*: Owner may require Contractor to furnish at Contractor's expense a special performance guarantee or other surety with respect to any substitute.

D. *Reimbursement of Engineer's Cost*: Engineer will record Engineer's costs in evaluating a substitute proposed or submitted by Contractor. Whether or not Engineer approves a substitute so proposed or submitted by Contractor, Contractor shall reimburse Owner for the reasonable charges of Engineer for evaluating each such proposed substitute. Contractor shall also reimburse Owner for the reasonable charges of Engineer for making changes in the Contract Documents (or in the provisions of any other direct contract with Owner) resulting from the acceptance of each proposed substitute.

E. *Contractor's Expense*: Contractor shall provide all data in support of any proposed substitute at Contractor's expense.

F. *Effect of Engineer's Determination*: If Engineer approves the substitution request, Contractor shall execute the proposed Change Order and proceed with the substitution. The Engineer's denial of a substitution request will be final and binding, and may not be reversed through an appeal under any provision of the Contract. Contractor may challenge the scope of reimbursement costs imposed under Paragraph 7.06.D, by timely submittal of a Change Proposal.

7.07 *Concerning Subcontractors and Suppliers*

A. Contractor may retain Subcontractors and Suppliers for the performance of parts of the Work. Such Subcontractors and Suppliers must be acceptable to Owner. The Contractor's retention of a Subcontractor or Supplier for the performance of parts of the Work will not relieve Contractor's obligation to Owner to perform and complete the Work in accordance with the Contract Documents.

B. Contractor shall retain specific Subcontractors and Suppliers for the performance of designated parts of the Work if required by the Contract to do so.

C. Subsequent to the submittal of Contractor's Bid or final negotiation of the terms of the Contract, Owner may not require Contractor to retain any Subcontractor or Supplier to furnish or perform any of the Work against which Contractor has reasonable objection.

D. Prior to entry into any binding subcontract or purchase order, Contractor shall submit to Owner the identity of the proposed Subcontractor or Supplier (unless Owner has already deemed such proposed Subcontractor or Supplier acceptable during the bidding process or

Copyright© 2018 National Society of Professional Engineers, American Council of Engineering Companies, and American Society of Civil Engineers. All rights reserved.

otherwise). Such proposed Subcontractor or Supplier shall be deemed acceptable to Owner unless Owner raises a substantive, reasonable objection within 5 days.

E. Owner may require the replacement of any Subcontractor or Supplier. Owner also may require Contractor to retain specific replacements; provided, however, that Owner may not require a replacement to which Contractor has a reasonable objection. If Contractor has submitted the identity of certain Subcontractors or Suppliers for acceptance by Owner, and Owner has accepted it (either in writing or by failing to make written objection thereto), then Owner may subsequently revoke the acceptance of any such Subcontractor or Supplier so identified solely on the basis of substantive, reasonable objection after due investigation. Contractor shall submit an acceptable replacement for the rejected Subcontractor or Supplier.

F. If Owner requires the replacement of any Subcontractor or Supplier retained by Contractor to perform any part of the Work, then Contractor shall be entitled to an adjustment in Contract Price or Contract Times, with respect to the replacement; and Contractor shall initiate a Change Proposal for such adjustment within 30 days of Owner's requirement of replacement.

G. No acceptance by Owner of any such Subcontractor or Supplier, whether initially or as a replacement, will constitute a waiver of the right of Owner to the completion of the Work in accordance with the Contract Documents.

H. On a monthly basis, Contractor shall submit to Engineer a complete list of all Subcontractors and Suppliers having a direct contract with Contractor, and of all other Subcontractors and Suppliers known to Contractor at the time of submittal.

I. Contractor shall be solely responsible for scheduling and coordinating the work of Subcontractors and Suppliers.

J. The divisions and sections of the Specifications and the identifications of any Drawings do not control Contractor in dividing the Work among Subcontractors or Suppliers, or in delineating the Work to be performed by any specific trade.

K. All Work performed for Contractor by a Subcontractor or Supplier must be pursuant to an appropriate contractual agreement that specifically binds the Subcontractor or Supplier to the applicable terms and conditions of the Contract for the benefit of Owner and Engineer.

L. Owner may furnish to any Subcontractor or Supplier, to the extent practicable, information about amounts paid to Contractor for Work performed for Contractor by the Subcontractor or Supplier.

M. Contractor shall restrict all Subcontractors and Suppliers from communicating with Engineer or Owner, except through Contractor or in case of an emergency, or as otherwise expressly allowed in this Contract.

7.08 *Patent Fees and Royalties*

A. Contractor shall pay all license fees and royalties and assume all costs incident to the use in the performance of the Work or the incorporation in the Work of any invention, design, process, product, or device which is the subject of patent rights or copyrights held by others. If an invention, design, process, product, or device is specified in the Contract Documents for use in the performance of the Work and if, to the actual knowledge of Owner or Engineer, its use is subject to patent rights or copyrights calling for the payment of any

Copyright© 2018 National Society of Professional Engineers, American Council of Engineering Companies, and American Society of Civil Engineers. All rights reserved.

license fee or royalty to others, the existence of such rights will be disclosed in the Contract Documents.

B. To the fullest extent permitted by Laws and Regulations, Owner shall indemnify and hold harmless Contractor, and its officers, directors, members, partners, employees, agents, consultants, and subcontractors, from and against all claims, costs, losses, and damages (including but not limited to all fees and charges of engineers, architects, attorneys, and other professionals, and all court or arbitration or other dispute resolution costs) arising out of or relating to any infringement of patent rights or copyrights incident to the use in the performance of the Work or resulting from the incorporation in the Work of any invention, design, process, product, or device specified in the Contract Documents, but not identified as being subject to payment of any license fee or royalty to others required by patent rights or copyrights.

C. To the fullest extent permitted by Laws and Regulations, Contractor shall indemnify and hold harmless Owner and Engineer, and the officers, directors, members, partners, employees, agents, consultants and subcontractors of each and any of them, from and against all claims, costs, losses, and damages (including but not limited to all fees and charges of engineers, architects, attorneys, and other professionals and all court or arbitration or other dispute resolution costs) arising out of or relating to any infringement of patent rights or copyrights incident to the use in the performance of the Work or resulting from the incorporation in the Work of any invention, design, process, product, or device not specified in the Contract Documents.

7.09 *Permits*

A. Unless otherwise provided in the Contract Documents, Contractor shall obtain and pay for all construction permits, licenses, and certificates of occupancy. Owner shall assist Contractor, when necessary, in obtaining such permits and licenses. Contractor shall pay all governmental charges and inspection fees necessary for the prosecution of the Work which are applicable at the time of the submission of Contractor's Bid (or when Contractor became bound under a negotiated contract). Owner shall pay all charges of utility owners for connections for providing permanent service to the Work.

7.10 *Taxes*

A. Contractor shall pay all sales, consumer, use, and other similar taxes required to be paid by Contractor in accordance with the Laws and Regulations of the place of the Project which are applicable during the performance of the Work.

7.11 *Laws and Regulations*

A. Contractor shall give all notices required by and shall comply with all Laws and Regulations applicable to the performance of the Work. Neither Owner nor Engineer shall be responsible for monitoring Contractor's compliance with any Laws or Regulations.

B. If Contractor performs any Work or takes any other action knowing or having reason to know that it is contrary to Laws or Regulations, Contractor shall bear all resulting costs and losses, and shall indemnify and hold harmless Owner and Engineer, and the officers, directors, members, partners, employees, agents, consultants, and subcontractors of each and any of them, from and against all claims, costs, losses, and damages (including but not limited to all fees and charges of engineers, architects, attorneys, and other professionals and all court or arbitration or other dispute resolution costs) arising out of or relating to

Copyright© 2018 National Society of Professional Engineers, American Council of Engineering Companies, and American Society of Civil Engineers. All rights reserved.

such Work or other action. It is not Contractor's responsibility to make certain that the Work described in the Contract Documents is in accordance with Laws and Regulations, but this does not relieve Contractor of its obligations under Paragraph 3.03.

C. Owner or Contractor may give written notice to the other party of any changes after the submission of Contractor's Bid (or after the date when Contractor became bound under a negotiated contract) in Laws or Regulations having an effect on the cost or time of performance of the Work, including but not limited to changes in Laws or Regulations having an effect on procuring permits and on sales, use, value-added, consumption, and other similar taxes. If Owner and Contractor are unable to agree on entitlement to or on the amount or extent, if any, of any adjustment in Contract Price or Contract Times resulting from such changes, then within 30 days of such written notice Contractor may submit a Change Proposal, or Owner may initiate a Claim.

7.12 *Record Documents*

A. Contractor shall maintain in a safe place at the Site one printed record copy of all Drawings, Specifications, Addenda, Change Orders, Work Change Directives, Field Orders, written interpretations and clarifications, and approved Shop Drawings. Contractor shall keep such record documents in good order and annotate them to show changes made during construction. These record documents, together with all approved Samples, will be available to Engineer for reference. Upon completion of the Work, Contractor shall deliver these record documents to Engineer.

7.13 *Safety and Protection*

A. Contractor shall be solely responsible for initiating, maintaining, and supervising all safety precautions and programs in connection with the Work. Such responsibility does not relieve Subcontractors of their responsibility for the safety of persons or property in the performance of their work, nor for compliance with applicable safety Laws and Regulations.

B. Contractor shall designate a qualified and experienced safety representative whose duties and responsibilities are the prevention of Work-related accidents and the maintenance and supervision of safety precautions and programs.

C. Contractor shall take all necessary precautions for the safety of, and shall provide the necessary protection to prevent damage, injury, or loss to:

1. all persons on the Site or who may be affected by the Work;

2. all the Work and materials and equipment to be incorporated therein, whether in storage on or off the Site; and

3. other property at the Site or adjacent thereto, including trees, shrubs, lawns, walks, pavements, roadways, structures, other work in progress, utilities, and Underground Facilities not designated for removal, relocation, or replacement in the course of construction.

D. All damage, injury, or loss to any property referred to in Paragraph 7.13.C.2 or 7.13.C.3 caused, directly or indirectly, in whole or in part, by Contractor, any Subcontractor, Supplier, or any other individual or entity directly or indirectly employed by any of them to perform any of the Work, or anyone for whose acts any of them may be liable, shall be remedied by Contractor at its expense (except damage or loss attributable to the fault of Drawings or Specifications or to the acts or omissions of Owner or Engineer or anyone employed by any

Copyright© 2018 National Society of Professional Engineers, American Council of Engineering Companies, and American Society of Civil Engineers. All rights reserved.

of them, or anyone for whose acts any of them may be liable, and not attributable, directly or indirectly, in whole or in part, to the fault or negligence of Contractor or any Subcontractor, Supplier, or other individual or entity directly or indirectly employed by any of them).

E. Contractor shall comply with all applicable Laws and Regulations relating to the safety of persons or property, or to the protection of persons or property from damage, injury, or loss; and shall erect and maintain all necessary safeguards for such safety and protection.

F. Contractor shall notify Owner; the owners of adjacent property; the owners of Underground Facilities and other utilities (if the identity of such owners is known to Contractor); and other contractors and utility owners performing work at or adjacent to the Site, in writing, when Contractor knows that prosecution of the Work may affect them, and shall cooperate with them in the protection, removal, relocation, and replacement of their property or work in progress.

G. Contractor shall comply with the applicable requirements of Owner's safety programs, if any. Any Owner's safety programs that are applicable to the Work are identified or included in the Supplementary Conditions or Specifications.

H. Contractor shall inform Owner and Engineer of the specific requirements of Contractor's safety program with which Owner's and Engineer's employees and representatives must comply while at the Site.

I. Contractor's duties and responsibilities for safety and protection will continue until all the Work is completed, Engineer has issued a written notice to Owner and Contractor in accordance with Paragraph 15.06.C that the Work is acceptable, and Contractor has left the Site (except as otherwise expressly provided in connection with Substantial Completion).

J. Contractor's duties and responsibilities for safety and protection will resume whenever Contractor or any Subcontractor or Supplier returns to the Site to fulfill warranty or correction obligations, or to conduct other tasks arising from the Contract Documents.

7.14 *Hazard Communication Programs*

A. Contractor shall be responsible for coordinating any exchange of safety data sheets (formerly known as material safety data sheets) or other hazard communication information required to be made available to or exchanged between or among employers at the Site in accordance with Laws or Regulations.

7.15 *Emergencies*

A. In emergencies affecting the safety or protection of persons or the Work or property at the Site or adjacent thereto, Contractor is obligated to act to prevent damage, injury, or loss. Contractor shall give Engineer prompt written notice if Contractor believes that any significant changes in the Work or variations from the Contract Documents have been caused by an emergency, or are required as a result of Contractor's response to an emergency. If Engineer determines that a change in the Contract Documents is required because of an emergency or Contractor's response, a Work Change Directive or Change Order will be issued.

Copyright© 2018 National Society of Professional Engineers, American Council of Engineering Companies, and American Society of Civil Engineers. All rights reserved.

7.16 *Submittals*

A. *Shop Drawing and Sample Requirements*

1. Before submitting a Shop Drawing or Sample, Contractor shall:

a. review and coordinate the Shop Drawing or Sample with other Shop Drawings and Samples and with the requirements of the Work and the Contract Documents;

b. determine and verify:

1) all field measurements, quantities, dimensions, specified performance and design criteria, installation requirements, materials, catalog numbers, and similar information with respect to the Submittal;

2) the suitability of all materials and equipment offered with respect to the indicated application, fabrication, shipping, handling, storage, assembly, and installation pertaining to the performance of the Work; and

3) all information relative to Contractor's responsibilities for means, methods, techniques, sequences, and procedures of construction, and safety precautions and programs incident thereto;

c. confirm that the Submittal is complete with respect to all related data included in the Submittal.

2. Each Shop Drawing or Sample must bear a stamp or specific written certification that Contractor has satisfied Contractor's obligations under the Contract Documents with respect to Contractor's review of that Submittal, and that Contractor approves the Submittal.

3. With each Shop Drawing or Sample, Contractor shall give Engineer specific written notice of any variations that the Submittal may have from the requirements of the Contract Documents. This notice must be set forth in a written communication separate from the Submittal; and, in addition, in the case of a Shop Drawing by a specific notation made on the Shop Drawing itself.

B. *Submittal Procedures for Shop Drawings and Samples*: Contractor shall label and submit Shop Drawings and Samples to Engineer for review and approval in accordance with the accepted Schedule of Submittals.

1. *Shop Drawings*

a. Contractor shall submit the number of copies required in the Specifications.

b. Data shown on the Shop Drawings must be complete with respect to quantities, dimensions, specified performance and design criteria, materials, and similar data to show Engineer the services, materials, and equipment Contractor proposes to provide, and to enable Engineer to review the information for the limited purposes required by Paragraph 7.16.C.

2. *Samples*

a. Contractor shall submit the number of Samples required in the Specifications.

b. Contractor shall clearly identify each Sample as to material, Supplier, pertinent data such as catalog numbers, the use for which intended and other data as Engineer

Copyright© 2018 National Society of Professional Engineers, American Council of Engineering Companies, and American Society of Civil Engineers. All rights reserved.

may require to enable Engineer to review the Submittal for the limited purposes required by Paragraph 7.16.C.

3. Where a Shop Drawing or Sample is required by the Contract Documents or the Schedule of Submittals, any related Work performed prior to Engineer's review and approval of the pertinent submittal will be at the sole expense and responsibility of Contractor.

C. *Engineer's Review of Shop Drawings and Samples*

1. Engineer will provide timely review of Shop Drawings and Samples in accordance with the accepted Schedule of Submittals. Engineer's review and approval will be only to determine if the items covered by the Submittals will, after installation or incorporation in the Work, comply with the requirements of the Contract Documents, and be compatible with the design concept of the completed Project as a functioning whole as indicated by the Contract Documents.

2. Engineer's review and approval will not extend to means, methods, techniques, sequences, or procedures of construction, or to safety precautions or programs incident thereto.

3. Engineer's review and approval of a separate item as such will not indicate approval of the assembly in which the item functions.

4. Engineer's review and approval of a Shop Drawing or Sample will not relieve Contractor from responsibility for any variation from the requirements of the Contract Documents unless Contractor has complied with the requirements of Paragraph 7.16.A.3 and Engineer has given written approval of each such variation by specific written notation thereof incorporated in or accompanying the Shop Drawing or Sample. Engineer will document any such approved variation from the requirements of the Contract Documents in a Field Order or other appropriate Contract modification.

5. Engineer's review and approval of a Shop Drawing or Sample will not relieve Contractor from responsibility for complying with the requirements of Paragraphs 7.16.A and B.

6. Engineer's review and approval of a Shop Drawing or Sample, or of a variation from the requirements of the Contract Documents, will not, under any circumstances, change the Contract Times or Contract Price, unless such changes are included in a Change Order.

7. Neither Engineer's receipt, review, acceptance, or approval of a Shop Drawing or Sample will result in such item becoming a Contract Document.

8. Contractor shall perform the Work in compliance with the requirements and commitments set forth in approved Shop Drawings and Samples, subject to the provisions of Paragraph 7.16.C.4.

D. *Resubmittal Procedures for Shop Drawings and Samples*

1. Contractor shall make corrections required by Engineer and shall return the required number of corrected copies of Shop Drawings and submit, as required, new Samples for review and approval. Contractor shall direct specific attention in writing to revisions other than the corrections called for by Engineer on previous Submittals.

2. Contractor shall furnish required Shop Drawing and Sample submittals with sufficient information and accuracy to obtain required approval of an item with no more than two

Copyright© 2018 National Society of Professional Engineers, American Council of Engineering Companies, and American Society of Civil Engineers. All rights reserved.

resubmittals. Engineer will record Engineer's time for reviewing a third or subsequent resubmittal of a Shop Drawing or Sample, and Contractor shall be responsible for Engineer's charges to Owner for such time. Owner may impose a set-off against payments due Contractor to secure reimbursement for such charges.

3. If Contractor requests a change of a previously approved Shop Drawing or Sample, Contractor shall be responsible for Engineer's charges to Owner for its review time, and Owner may impose a set-off against payments due Contractor to secure reimbursement for such charges, unless the need for such change is beyond the control of Contractor.

E. *Submittals Other than Shop Drawings, Samples, and Owner-Delegated Designs*

1. The following provisions apply to all Submittals other than Shop Drawings, Samples, and Owner-delegated designs:

a. Contractor shall submit all such Submittals to the Engineer in accordance with the Schedule of Submittals and pursuant to the applicable terms of the Contract Documents.

b. Engineer will provide timely review of all such Submittals in accordance with the Schedule of Submittals and return such Submittals with a notation of either Accepted or Not Accepted. Any such Submittal that is not returned within the time established in the Schedule of Submittals will be deemed accepted.

c. Engineer's review will be only to determine if the Submittal is acceptable under the requirements of the Contract Documents as to general form and content of the Submittal.

d. If any such Submittal is not accepted, Contractor shall confer with Engineer regarding the reason for the non-acceptance, and resubmit an acceptable document.

2. Procedures for the submittal and acceptance of the Progress Schedule, the Schedule of Submittals, and the Schedule of Values are set forth in Paragraphs 2.03. 2.04, and 2.05.

F. Owner-delegated Designs: Submittals pursuant to Owner-delegated designs are governed by the provisions of Paragraph 7.19.

7.17 *Contractor's General Warranty and Guarantee*

A. Contractor warrants and guarantees to Owner that all Work will be in accordance with the Contract Documents and will not be defective. Engineer is entitled to rely on Contractor's warranty and guarantee.

B. Owner's rights under this warranty and guarantee are in addition to, and are not limited by, Owner's rights under the correction period provisions of Paragraph 15.08. The time in which Owner may enforce its warranty and guarantee rights under this Paragraph 7.17 is limited only by applicable Laws and Regulations restricting actions to enforce such rights; provided, however, that after the end of the correction period under Paragraph 15.08:

1. Owner shall give Contractor written notice of any defective Work within 60 days of the discovery that such Work is defective; and

Copyright© 2018 National Society of Professional Engineers, American Council of Engineering Companies, and American Society of Civil Engineers. All rights reserved.

2. Such notice will be deemed the start of an event giving rise to a Claim under Paragraph 12.01.B, such that any related Claim must be brought within 30 days of the notice.

C. Contractor's warranty and guarantee hereunder excludes defects or damage caused by:

1. abuse, or improper modification, maintenance, or operation, by persons other than Contractor, Subcontractors, Suppliers, or any other individual or entity for whom Contractor is responsible; or

2. normal wear and tear under normal usage.

D. Contractor's obligation to perform and complete the Work in accordance with the Contract Documents is absolute. None of the following will constitute an acceptance of Work that is not in accordance with the Contract Documents, a release of Contractor's obligation to perform the Work in accordance with the Contract Documents, or a release of Owner's warranty and guarantee rights under this Paragraph 7.17:

1. Observations by Engineer;

2. Recommendation by Engineer or payment by Owner of any progress or final payment;

3. The issuance of a certificate of Substantial Completion by Engineer or any payment related thereto by Owner;

4. Use or occupancy of the Work or any part thereof by Owner;

5. Any review and approval of a Shop Drawing or Sample submittal;

6. The issuance of a notice of acceptability by Engineer;

7. The end of the correction period established in Paragraph 15.08;

8. Any inspection, test, or approval by others; or

9. Any correction of defective Work by Owner.

E. If the Contract requires the Contractor to accept the assignment of a contract entered into by Owner, then the specific warranties, guarantees, and correction obligations contained in the assigned contract will govern with respect to Contractor's performance obligations to Owner for the Work described in the assigned contract.

7.18 *Indemnification*

A. To the fullest extent permitted by Laws and Regulations, and in addition to any other obligations of Contractor under the Contract or otherwise, Contractor shall indemnify and hold harmless Owner and Engineer, and the officers, directors, members, partners, employees, agents, consultants and subcontractors of each and any of them, from losses, damages, costs, and judgments (including but not limited to all fees and charges of engineers, architects, attorneys, and other professionals, and all court or arbitration or other dispute resolution costs) arising from third-party claims or actions relating to or resulting from the performance or furnishing of the Work, provided that any such claim, action, loss, cost, judgment or damage is attributable to bodily injury, sickness, disease, or death, or to damage to or destruction of tangible property (other than the Work itself), including the loss of use resulting therefrom, but only to the extent caused by any negligent act or omission of Contractor, any Subcontractor, any Supplier, or any individual or entity

Copyright© 2018 National Society of Professional Engineers, American Council of Engineering Companies, and American Society of Civil Engineers. All rights reserved.

directly or indirectly employed by any of them to perform any of the Work, or anyone for whose acts any of them may be liable.

B. In any and all claims against Owner or Engineer, or any of their officers, directors, members, partners, employees, agents, consultants, or subcontractors, by any employee (or the survivor or personal representative of such employee) of Contractor, any Subcontractor, any Supplier, or any individual or entity directly or indirectly employed by any of them to perform any of the Work, or anyone for whose acts any of them may be liable, the indemnification obligation under Paragraph 7.18.A will not be limited in any way by any limitation on the amount or type of damages, compensation, or benefits payable by or for Contractor or any such Subcontractor, Supplier, or other individual or entity under workers' compensation acts, disability benefit acts, or other employee benefit acts.

7.19 *Delegation of Professional Design Services*

A. Owner may require Contractor to provide professional design services for a portion of the Work by express delegation in the Contract Documents. Such delegation will specify the performance and design criteria that such services must satisfy, and the Submittals that Contractor must furnish to Engineer with respect to the Owner-delegated design.

B. Contractor shall cause such Owner-delegated professional design services to be provided pursuant to the professional standard of care by a properly licensed design professional, whose signature and seal must appear on all drawings, calculations, specifications, certifications, and Submittals prepared by such design professional. Such design professional must issue all certifications of design required by Laws and Regulations.

C. If a Shop Drawing or other Submittal related to the Owner-delegated design is prepared by Contractor, a Subcontractor, or others for submittal to Engineer, then such Shop Drawing or other Submittal must bear the written approval of Contractor's design professional when submitted by Contractor to Engineer.

D. Owner and Engineer shall be entitled to rely upon the adequacy, accuracy, and completeness of the services, certifications, and approvals performed or provided by the design professionals retained or employed by Contractor under an Owner-delegated design, subject to the professional standard of care and the performance and design criteria stated in the Contract Documents.

E. Pursuant to this Paragraph 7.19, Engineer's review, approval, and other determinations regarding design drawings, calculations, specifications, certifications, and other Submittals furnished by Contractor pursuant to an Owner-delegated design will be only for the following limited purposes:

1. Checking for conformance with the requirements of this Paragraph 7.19;

2. Confirming that Contractor (through its design professionals) has used the performance and design criteria specified in the Contract Documents; and

3. Establishing that the design furnished by Contractor is consistent with the design concept expressed in the Contract Documents.

F. Contractor shall not be responsible for the adequacy of performance or design criteria specified by Owner or Engineer.

Copyright© 2018 National Society of Professional Engineers, American Council of Engineering Companies, and American Society of Civil Engineers. All rights reserved.

G. Contractor is not required to provide professional services in violation of applicable Laws and Regulations.

ARTICLE 8—OTHER WORK AT THE SITE

8.01 *Other Work*

A. In addition to and apart from the Work under the Contract Documents, the Owner may perform other work at or adjacent to the Site. Such other work may be performed by Owner's employees, or through contracts between the Owner and third parties. Owner may also arrange to have third-party utility owners perform work on their utilities and facilities at or adjacent to the Site.

B. If Owner performs other work at or adjacent to the Site with Owner's employees, or through contracts for such other work, then Owner shall give Contractor written notice thereof prior to starting any such other work. If Owner has advance information regarding the start of any third-party utility work that Owner has arranged to take place at or adjacent to the Site, Owner shall provide such information to Contractor.

C. Contractor shall afford proper and safe access to the Site to each contractor that performs such other work, each utility owner performing other work, and Owner, if Owner is performing other work with Owner's employees, and provide a reasonable opportunity for the introduction and storage of materials and equipment and the execution of such other work.

D. Contractor shall do all cutting, fitting, and patching of the Work that may be required to properly connect or otherwise make its several parts come together and properly integrate with such other work. Contractor shall not endanger any work of others by cutting, excavating, or otherwise altering such work; provided, however, that Contractor may cut or alter others' work with the written consent of Engineer and the others whose work will be affected.

E. If the proper execution or results of any part of Contractor's Work depends upon work performed by others, Contractor shall inspect such other work and promptly report to Engineer in writing any delays, defects, or deficiencies in such other work that render it unavailable or unsuitable for the proper execution and results of Contractor's Work. Contractor's failure to so report will constitute an acceptance of such other work as fit and proper for integration with Contractor's Work except for latent defects and deficiencies in such other work.

F. The provisions of this article are not applicable to work that is performed by third-party utilities or other third-party entities without a contract with Owner, or that is performed without having been arranged by Owner. If such work occurs, then any related delay, disruption, or interference incurred by Contractor is governed by the provisions of Paragraph 4.05.C.3.

8.02 *Coordination*

A. If Owner intends to contract with others for the performance of other work at or adjacent to the Site, to perform other work at or adjacent to the Site with Owner's employees, or to arrange to have utility owners perform work at or adjacent to the Site, the following will be

Copyright© 2018 National Society of Professional Engineers, American Council of Engineering Companies, and American Society of Civil Engineers. All rights reserved.

set forth in the Supplementary Conditions or provided to Contractor prior to the start of any such other work:

1. The identity of the individual or entity that will have authority and responsibility for coordination of the activities among the various contractors;
2. An itemization of the specific matters to be covered by such authority and responsibility; and
3. The extent of such authority and responsibilities.

B. Unless otherwise provided in the Supplementary Conditions, Owner shall have sole authority and responsibility for such coordination.

8.03 *Legal Relationships*

A. If, in the course of performing other work for Owner at or adjacent to the Site, the Owner's employees, any other contractor working for Owner, or any utility owner that Owner has arranged to perform work, causes damage to the Work or to the property of Contractor or its Subcontractors, or delays, disrupts, interferes with, or increases the scope or cost of the performance of the Work, through actions or inaction, then Contractor shall be entitled to an equitable adjustment in the Contract Price or the Contract Times. Contractor must submit any Change Proposal seeking an equitable adjustment in the Contract Price or the Contract Times under this paragraph within 30 days of the damaging, delaying, disrupting, or interfering event. The entitlement to, and extent of, any such equitable adjustment will take into account information (if any) regarding such other work that was provided to Contractor in the Contract Documents prior to the submittal of the Bid or the final negotiation of the terms of the Contract, and any remedies available to Contractor under Laws or Regulations concerning utility action or inaction. When applicable, any such equitable adjustment in Contract Price will be conditioned on Contractor assigning to Owner all Contractor's rights against such other contractor or utility owner with respect to the damage, delay, disruption, or interference that is the subject of the adjustment. Contractor's entitlement to an adjustment of the Contract Times or Contract Price is subject to the provisions of Paragraphs 4.05.D and 4.05.E.

B. Contractor shall take reasonable and customary measures to avoid damaging, delaying, disrupting, or interfering with the work of Owner, any other contractor, or any utility owner performing other work at or adjacent to the Site.

1. If Contractor fails to take such measures and as a result damages, delays, disrupts, or interferes with the work of any such other contractor or utility owner, then Owner may impose a set-off against payments due Contractor, and assign to such other contractor or utility owner the Owner's contractual rights against Contractor with respect to the breach of the obligations set forth in this Paragraph 8.03.B.
2. When Owner is performing other work at or adjacent to the Site with Owner's employees, Contractor shall be liable to Owner for damage to such other work, and for the reasonable direct delay, disruption, and interference costs incurred by Owner as a result of Contractor's failure to take reasonable and customary measures with respect to Owner's other work. In response to such damage, delay, disruption, or interference, Owner may impose a set-off against payments due Contractor.

Copyright© 2018 National Society of Professional Engineers, American Council of Engineering Companies, and American Society of Civil Engineers. All rights reserved.

C. If Contractor damages, delays, disrupts, or interferes with the work of any other contractor, or any utility owner performing other work at or adjacent to the Site, through Contractor's failure to take reasonable and customary measures to avoid such impacts, or if any claim arising out of Contractor's actions, inactions, or negligence in performance of the Work at or adjacent to the Site is made by any such other contractor or utility owner against Contractor, Owner, or Engineer, then Contractor shall (1) promptly attempt to settle the claim as to all parties through negotiations with such other contractor or utility owner, or otherwise resolve the claim by arbitration or other dispute resolution proceeding or at law, and (2) indemnify and hold harmless Owner and Engineer, and the officers, directors, members, partners, employees, agents, consultants and subcontractors of each and any of them from and against any such claims, and against all costs, losses, and damages (including but not limited to all fees and charges of engineers, architects, attorneys, and other professionals and all court or arbitration or other dispute resolution costs) arising out of or relating to such damage, delay, disruption, or interference.

ARTICLE 9—OWNER'S RESPONSIBILITIES

9.01 *Communications to Contractor*

A. Except as otherwise provided in these General Conditions, Owner shall issue all communications to Contractor through Engineer.

9.02 *Replacement of Engineer*

A. Owner may at its discretion appoint an engineer to replace Engineer, provided Contractor makes no reasonable objection to the replacement engineer. The replacement engineer's status under the Contract Documents will be that of the former Engineer.

9.03 *Furnish Data*

A. Owner shall promptly furnish the data required of Owner under the Contract Documents.

9.04 *Pay When Due*

A. Owner shall make payments to Contractor when they are due as provided in the Agreement.

9.05 *Lands and Easements; Reports, Tests, and Drawings*

A. Owner's duties with respect to providing lands and easements are set forth in Paragraph 5.01.

B. Owner's duties with respect to providing engineering surveys to establish reference points are set forth in Paragraph 4.03.

C. Article 5 refers to Owner's identifying and making available to Contractor copies of reports of explorations and tests of conditions at the Site, and drawings of physical conditions relating to existing surface or subsurface structures at the Site.

9.06 *Insurance*

A. Owner's responsibilities, if any, with respect to purchasing and maintaining liability and property insurance are set forth in Article 6.

9.07 *Change Orders*

A. Owner's responsibilities with respect to Change Orders are set forth in Article 11.

Copyright© 2018 National Society of Professional Engineers, American Council of Engineering Companies, and American Society of Civil Engineers. All rights reserved.

9.08 *Inspections, Tests, and Approvals*

A. Owner's responsibility with respect to certain inspections, tests, and approvals is set forth in Paragraph 14.02.B.

9.09 *Limitations on Owner's Responsibilities*

A. The Owner shall not supervise, direct, or have control or authority over, nor be responsible for, Contractor's means, methods, techniques, sequences, or procedures of construction, or the safety precautions and programs incident thereto, or for any failure of Contractor to comply with Laws and Regulations applicable to the performance of the Work. Owner will not be responsible for Contractor's failure to perform the Work in accordance with the Contract Documents.

9.10 *Undisclosed Hazardous Environmental Condition*

A. Owner's responsibility in respect to an undisclosed Hazardous Environmental Condition is set forth in Paragraph 5.06.

9.11 *Evidence of Financial Arrangements*

A. Upon request of Contractor, Owner shall furnish Contractor reasonable evidence that financial arrangements have been made to satisfy Owner's obligations under the Contract (including obligations under proposed changes in the Work).

9.12 *Safety Programs*

A. While at the Site, Owner's employees and representatives shall comply with the specific applicable requirements of Contractor's safety programs of which Owner has been informed.

B. Owner shall furnish copies of any applicable Owner safety programs to Contractor.

ARTICLE 10—ENGINEER'S STATUS DURING CONSTRUCTION

10.01 *Owner's Representative*

A. Engineer will be Owner's representative during the construction period. The duties and responsibilities and the limitations of authority of Engineer as Owner's representative during construction are set forth in the Contract.

10.02 *Visits to Site*

A. Engineer will make visits to the Site at intervals appropriate to the various stages of construction as Engineer deems necessary in order to observe, as an experienced and qualified design professional, the progress that has been made and the quality of the various aspects of Contractor's executed Work. Based on information obtained during such visits and observations, Engineer, for the benefit of Owner, will determine, in general, if the Work is proceeding in accordance with the Contract Documents. Engineer will not be required to make exhaustive or continuous inspections on the Site to check the quality or quantity of the Work. Engineer's efforts will be directed toward providing for Owner a greater degree of confidence that the completed Work will conform generally to the Contract Documents. On the basis of such visits and observations, Engineer will keep Owner informed of the progress of the Work and will endeavor to guard Owner against defective Work.

Copyright© 2018 National Society of Professional Engineers, American Council of Engineering Companies, and American Society of Civil Engineers. All rights reserved.

B. Engineer's visits and observations are subject to all the limitations on Engineer's authority and responsibility set forth in Paragraph 10.07. Particularly, but without limitation, during or as a result of Engineer's visits or observations of Contractor's Work, Engineer will not supervise, direct, control, or have authority over or be responsible for Contractor's means, methods, techniques, sequences, or procedures of construction, or the safety precautions and programs incident thereto, or for any failure of Contractor to comply with Laws and Regulations applicable to the performance of the Work.

10.03 *Resident Project Representative*

A. If Owner and Engineer have agreed that Engineer will furnish a Resident Project Representative to represent Engineer at the Site and assist Engineer in observing the progress and quality of the Work, then the authority and responsibilities of any such Resident Project Representative will be as provided in the Supplementary Conditions, and limitations on the responsibilities thereof will be as provided in the Supplementary Conditions and in Paragraph 10.07.

B. If Owner designates an individual or entity who is not Engineer's consultant, agent, or employee to represent Owner at the Site, then the responsibilities and authority of such individual or entity will be as provided in the Supplementary Conditions.

10.04 *Engineer's Authority*

A. Engineer has the authority to reject Work in accordance with Article 14.

B. Engineer's authority as to Submittals is set forth in Paragraph 7.16.

C. Engineer's authority as to design drawings, calculations, specifications, certifications and other Submittals from Contractor in response to Owner's delegation (if any) to Contractor of professional design services, is set forth in Paragraph 7.19.

D. Engineer's authority as to changes in the Work is set forth in Article 11.

E. Engineer's authority as to Applications for Payment is set forth in Article 15.

10.05 *Determinations for Unit Price Work*

A. Engineer will determine the actual quantities and classifications of Unit Price Work performed by Contractor as set forth in Paragraph 13.03.

10.06 *Decisions on Requirements of Contract Documents and Acceptability of Work*

A. Engineer will render decisions regarding the requirements of the Contract Documents, and judge the acceptability of the Work, pursuant to the specific procedures set forth herein for initial interpretations, Change Proposals, and acceptance of the Work. In rendering such decisions and judgments, Engineer will not show partiality to Owner or Contractor, and will not be liable to Owner, Contractor, or others in connection with any proceedings, interpretations, decisions, or judgments conducted or rendered in good faith.

10.07 *Limitations on Engineer's Authority and Responsibilities*

A. Neither Engineer's authority or responsibility under this Article 10 or under any other provision of the Contract, nor any decision made by Engineer in good faith either to exercise or not exercise such authority or responsibility or the undertaking, exercise, or performance of any authority or responsibility by Engineer, will create, impose, or give rise to any duty in contract, tort, or otherwise owed by Engineer to Contractor, any Subcontractor, any

Copyright© 2018 National Society of Professional Engineers, American Council of Engineering Companies, and American Society of Civil Engineers. All rights reserved.

Supplier, any other individual or entity, or to any surety for or employee or agent of any of them.

B. Engineer will not supervise, direct, control, or have authority over or be responsible for Contractor's means, methods, techniques, sequences, or procedures of construction, or the safety precautions and programs incident thereto, or for any failure of Contractor to comply with Laws and Regulations applicable to the performance of the Work. Engineer will not be responsible for Contractor's failure to perform the Work in accordance with the Contract Documents.

C. Engineer will not be responsible for the acts or omissions of Contractor or of any Subcontractor, any Supplier, or of any other individual or entity performing any of the Work.

D. Engineer's review of the final Application for Payment and accompanying documentation, and all maintenance and operating instructions, schedules, guarantees, bonds, certificates of inspection, tests and approvals, and other documentation required to be delivered by Contractor under Paragraph 15.06.A, will only be to determine generally that their content complies with the requirements of, and in the case of certificates of inspections, tests, and approvals, that the results certified indicate compliance with the Contract Documents.

E. The limitations upon authority and responsibility set forth in this Paragraph 10.07 also apply to the Resident Project Representative, if any.

10.08 *Compliance with Safety Program*

A. While at the Site, Engineer's employees and representatives will comply with the specific applicable requirements of Owner's and Contractor's safety programs of which Engineer has been informed.

ARTICLE 11—CHANGES TO THE CONTRACT

11.01 *Amending and Supplementing the Contract*

A. The Contract may be amended or supplemented by a Change Order, a Work Change Directive, or a Field Order.

B. If an amendment or supplement to the Contract includes a change in the Contract Price or the Contract Times, such amendment or supplement must be set forth in a Change Order.

C. All changes to the Contract that involve (1) the performance or acceptability of the Work, (2) the design (as set forth in the Drawings, Specifications, or otherwise), or (3) other engineering or technical matters, must be supported by Engineer's recommendation. Owner and Contractor may amend other terms and conditions of the Contract without the recommendation of the Engineer.

11.02 *Change Orders*

A. Owner and Contractor shall execute appropriate Change Orders covering:

1. Changes in Contract Price or Contract Times which are agreed to by the parties, including any undisputed sum or amount of time for Work actually performed in accordance with a Work Change Directive;

2. Changes in Contract Price resulting from an Owner set-off, unless Contractor has duly contested such set-off;

Copyright© 2018 National Society of Professional Engineers, American Council of Engineering Companies, and American Society of Civil Engineers. All rights reserved.

3. Changes in the Work which are: (a) ordered by Owner pursuant to Paragraph 11.05, (b) required because of Owner's acceptance of defective Work under Paragraph 14.04 or Owner's correction of defective Work under Paragraph 14.07, or (c) agreed to by the parties, subject to the need for Engineer's recommendation if the change in the Work involves the design (as set forth in the Drawings, Specifications, or otherwise) or other engineering or technical matters; and

4. Changes that embody the substance of any final and binding results under: Paragraph 11.03.B, resolving the impact of a Work Change Directive; Paragraph 11.09, concerning Change Proposals; Article 12, Claims; Paragraph 13.02.D, final adjustments resulting from allowances; Paragraph 13.03.D, final adjustments relating to determination of quantities for Unit Price Work; and similar provisions.

B. If Owner or Contractor refuses to execute a Change Order that is required to be executed under the terms of Paragraph 11.02.A, it will be deemed to be of full force and effect, as if fully executed.

11.03 *Work Change Directives*

A. A Work Change Directive will not change the Contract Price or the Contract Times but is evidence that the parties expect that the modification ordered or documented by a Work Change Directive will be incorporated in a subsequently issued Change Order, following negotiations by the parties as to the Work Change Directive's effect, if any, on the Contract Price and Contract Times; or, if negotiations are unsuccessful, by a determination under the terms of the Contract Documents governing adjustments, expressly including Paragraph 11.07 regarding change of Contract Price.

B. If Owner has issued a Work Change Directive and:

1. Contractor believes that an adjustment in Contract Times or Contract Price is necessary, then Contractor shall submit any Change Proposal seeking such an adjustment no later than 30 days after the completion of the Work set out in the Work Change Directive.

2. Owner believes that an adjustment in Contract Times or Contract Price is necessary, then Owner shall submit any Claim seeking such an adjustment no later than 60 days after issuance of the Work Change Directive.

11.04 *Field Orders*

A. Engineer may authorize minor changes in the Work if the changes do not involve an adjustment in the Contract Price or the Contract Times and are compatible with the design concept of the completed Project as a functioning whole as indicated by the Contract Documents. Such changes will be accomplished by a Field Order and will be binding on Owner and also on Contractor, which shall perform the Work involved promptly.

B. If Contractor believes that a Field Order justifies an adjustment in the Contract Price or Contract Times, then before proceeding with the Work at issue, Contractor shall submit a Change Proposal as provided herein.

11.05 *Owner-Authorized Changes in the Work*

A. Without invalidating the Contract and without notice to any surety, Owner may, at any time or from time to time, order additions, deletions, or revisions in the Work. Changes involving

Copyright© 2018 National Society of Professional Engineers, American Council of Engineering Companies, and American Society of Civil Engineers. All rights reserved.

the design (as set forth in the Drawings, Specifications, or otherwise) or other engineering or technical matters will be supported by Engineer's recommendation.

B. Such changes in the Work may be accomplished by a Change Order, if Owner and Contractor have agreed as to the effect, if any, of the changes on Contract Times or Contract Price; or by a Work Change Directive. Upon receipt of any such document, Contractor shall promptly proceed with the Work involved; or, in the case of a deletion in the Work, promptly cease construction activities with respect to such deleted Work. Added or revised Work must be performed under the applicable conditions of the Contract Documents.

C. Nothing in this Paragraph 11.05 obligates Contractor to undertake work that Contractor reasonably concludes cannot be performed in a manner consistent with Contractor's safety obligations under the Contract Documents or Laws and Regulations.

11.06 *Unauthorized Changes in the Work*

A. Contractor shall not be entitled to an increase in the Contract Price or an extension of the Contract Times with respect to any work performed that is not required by the Contract Documents, as amended, modified, or supplemented, except in the case of an emergency as provided in Paragraph 7.15 or in the case of uncovering Work as provided in Paragraph 14.05.C.2.

11.07 *Change of Contract Price*

A. The Contract Price may only be changed by a Change Order. Any Change Proposal for an adjustment in the Contract Price must comply with the provisions of Paragraph 11.09. Any Claim for an adjustment of Contract Price must comply with the provisions of Article 12.

B. An adjustment in the Contract Price will be determined as follows:

1. Where the Work involved is covered by unit prices contained in the Contract Documents, then by application of such unit prices to the quantities of the items involved (subject to the provisions of Paragraph 13.03);

2. Where the Work involved is not covered by unit prices contained in the Contract Documents, then by a mutually agreed lump sum (which may include an allowance for overhead and profit not necessarily in accordance with Paragraph 11.07.C.2); or

3. Where the Work involved is not covered by unit prices contained in the Contract Documents and the parties do not reach mutual agreement to a lump sum, then on the basis of the Cost of the Work (determined as provided in Paragraph 13.01) plus a Contractor's fee for overhead and profit (determined as provided in Paragraph 11.07.C).

C. *Contractor's Fee*: When applicable, the Contractor's fee for overhead and profit will be determined as follows:

1. A mutually acceptable fixed fee; or

2. If a fixed fee is not agreed upon, then a fee based on the following percentages of the various portions of the Cost of the Work:

a. For costs incurred under Paragraphs 13.01.B.1 and 13.01.B.2, the Contractor's fee will be 15 percent;

b. For costs incurred under Paragraph 13.01.B.3, the Contractor's fee will be 5 percent;

Copyright© 2018 National Society of Professional Engineers, American Council of Engineering Companies, and American Society of Civil Engineers. All rights reserved.

c. Where one or more tiers of subcontracts are on the basis of Cost of the Work plus a fee and no fixed fee is agreed upon, the intent of Paragraphs 11.07.C.2.a and 11.07.C.2.b is that the Contractor's fee will be based on: (1) a fee of 15 percent of the costs incurred under Paragraphs 13.01.B.1 and 13.01.B.2 by the Subcontractor that actually performs the Work, at whatever tier, and (2) with respect to Contractor itself and to any Subcontractors of a tier higher than that of the Subcontractor that actually performs the Work, a fee of 5 percent of the amount (fee plus underlying costs incurred) attributable to the next lower tier Subcontractor; provided, however, that for any such subcontracted Work the maximum total fee to be paid by Owner will be no greater than 27 percent of the costs incurred by the Subcontractor that actually performs the Work;

d. No fee will be payable on the basis of costs itemized under Paragraphs 13.01.B.4, 13.01.B.5, and 13.01.C;

e. The amount of credit to be allowed by Contractor to Owner for any change which results in a net decrease in Cost of the Work will be the amount of the actual net decrease in Cost of the Work and a deduction of an additional amount equal to 5 percent of such actual net decrease in Cost of the Work; and

f. When both additions and credits are involved in any one change or Change Proposal, the adjustment in Contractor's fee will be computed by determining the sum of the costs in each of the cost categories in Paragraph 13.01.B (specifically, payroll costs, Paragraph 13.01.B.1; incorporated materials and equipment costs, Paragraph 13.01.B.2; Subcontract costs, Paragraph 13.01.B.3; special consultants costs, Paragraph 13.01.B.4; and other costs, Paragraph 13.01.B.5) and applying to each such cost category sum the appropriate fee from Paragraphs 11.07.C.2.a through 11.07.C.2.e, inclusive.

11.08 *Change of Contract Times*

A. The Contract Times may only be changed by a Change Order. Any Change Proposal for an adjustment in the Contract Times must comply with the provisions of Paragraph 11.09. Any Claim for an adjustment in the Contract Times must comply with the provisions of Article 12.

B. Delay, disruption, and interference in the Work, and any related changes in Contract Times, are addressed in and governed by Paragraph 4.05.

11.09 *Change Proposals*

A. *Purpose and Content*: Contractor shall submit a Change Proposal to Engineer to request an adjustment in the Contract Times or Contract Price; contest an initial decision by Engineer concerning the requirements of the Contract Documents or relating to the acceptability of the Work under the Contract Documents; challenge a set-off against payment due; or seek other relief under the Contract. The Change Proposal will specify any proposed change in Contract Times or Contract Price, or other proposed relief, and explain the reason for the proposed change, with citations to any governing or applicable provisions of the Contract Documents. Each Change Proposal will address only one issue, or a set of closely related issues.

Copyright© 2018 National Society of Professional Engineers, American Council of Engineering Companies, and American Society of Civil Engineers. All rights reserved.

B. *Change Proposal Procedures*

1. *Submittal*: Contractor shall submit each Change Proposal to Engineer within 30 days after the start of the event giving rise thereto, or after such initial decision.

2. *Supporting Data*: The Contractor shall submit supporting data, including the proposed change in Contract Price or Contract Time (if any), to the Engineer and Owner within 15 days after the submittal of the Change Proposal.

    a. Change Proposals based on or related to delay, interruption, or interference must comply with the provisions of Paragraphs 4.05.D and 4.05.E.

    b. Change proposals related to a change of Contract Price must include full and detailed accounts of materials incorporated into the Work and labor and equipment used for the subject Work.

    The supporting data must be accompanied by a written statement that the supporting data are accurate and complete, and that any requested time or price adjustment is the entire adjustment to which Contractor believes it is entitled as a result of said event.

3. *Engineer's Initial Review*: Engineer will advise Owner regarding the Change Proposal, and consider any comments or response from Owner regarding the Change Proposal. If in its discretion Engineer concludes that additional supporting data is needed before conducting a full review and making a decision regarding the Change Proposal, then Engineer may request that Contractor submit such additional supporting data by a date specified by Engineer, prior to Engineer beginning its full review of the Change Proposal.

4. *Engineer's Full Review and Action on the Change Proposal*: Upon receipt of Contractor's supporting data (including any additional data requested by Engineer), Engineer will conduct a full review of each Change Proposal and, within 30 days after such receipt of the Contractor's supporting data, either approve the Change Proposal in whole, deny it in whole, or approve it in part and deny it in part. Such actions must be in writing, with a copy provided to Owner and Contractor. If Engineer does not take action on the Change Proposal within 30 days, then either Owner or Contractor may at any time thereafter submit a letter to the other party indicating that as a result of Engineer's inaction the Change Proposal is deemed denied, thereby commencing the time for appeal of the denial under Article 12.

5. *Binding Decision*: Engineer's decision is final and binding upon Owner and Contractor, unless Owner or Contractor appeals the decision by filing a Claim under Article 12.

C. *Resolution of Certain Change Proposals*: If the Change Proposal does not involve the design (as set forth in the Drawings, Specifications, or otherwise), the acceptability of the Work, or other engineering or technical matters, then Engineer will notify the parties in writing that the Engineer is unable to resolve the Change Proposal. For purposes of further resolution of such a Change Proposal, such notice will be deemed a denial, and Contractor may choose to seek resolution under the terms of Article 12.

D. *Post-Completion*: Contractor shall not submit any Change Proposals after Engineer issues a written recommendation of final payment pursuant to Paragraph 15.06.B.

Copyright© 2018 National Society of Professional Engineers, American Council of Engineering Companies, and American Society of Civil Engineers. All rights reserved.

11.10 *Notification to Surety*

A. If the provisions of any bond require notice to be given to a surety of any change affecting the general scope of the Work or the provisions of the Contract Documents (including, but not limited to, Contract Price or Contract Times), the giving of any such notice will be Contractor's responsibility. The amount of each applicable bond will be adjusted to reflect the effect of any such change.

ARTICLE 12—CLAIMS

12.01 *Claims*

A. *Claims Process*: The following disputes between Owner and Contractor are subject to the Claims process set forth in this article:

1. Appeals by Owner or Contractor of Engineer's decisions regarding Change Proposals;

2. Owner demands for adjustments in the Contract Price or Contract Times, or other relief under the Contract Documents;

3. Disputes that Engineer has been unable to address because they do not involve the design (as set forth in the Drawings, Specifications, or otherwise), the acceptability of the Work, or other engineering or technical matters; and

4. Subject to the waiver provisions of Paragraph 15.07, any dispute arising after Engineer has issued a written recommendation of final payment pursuant to Paragraph 15.06.B.

B. *Submittal of Claim*: The party submitting a Claim shall deliver it directly to the other party to the Contract promptly (but in no event later than 30 days) after the start of the event giving rise thereto; in the case of appeals regarding Change Proposals within 30 days of the decision under appeal. The party submitting the Claim shall also furnish a copy to the Engineer, for its information only. The responsibility to substantiate a Claim rests with the party making the Claim. In the case of a Claim by Contractor seeking an increase in the Contract Times or Contract Price, Contractor shall certify that the Claim is made in good faith, that the supporting data are accurate and complete, and that to the best of Contractor's knowledge and belief the amount of time or money requested accurately reflects the full amount to which Contractor is entitled.

C. *Review and Resolution*: The party receiving a Claim shall review it thoroughly, giving full consideration to its merits. The two parties shall seek to resolve the Claim through the exchange of information and direct negotiations. The parties may extend the time for resolving the Claim by mutual agreement. All actions taken on a Claim will be stated in writing and submitted to the other party, with a copy to Engineer.

D. *Mediation*

1. At any time after initiation of a Claim, Owner and Contractor may mutually agree to mediation of the underlying dispute. The agreement to mediate will stay the Claim submittal and response process.

2. If Owner and Contractor agree to mediation, then after 60 days from such agreement, either Owner or Contractor may unilaterally terminate the mediation process, and the Claim submittal and decision process will resume as of the date of the termination. If the mediation proceeds but is unsuccessful in resolving the dispute, the Claim submittal

Copyright© 2018 National Society of Professional Engineers, American Council of Engineering Companies, and American Society of Civil Engineers. All rights reserved.

and decision process will resume as of the date of the conclusion of the mediation, as determined by the mediator.

3. Owner and Contractor shall each pay one-half of the mediator's fees and costs.

E. *Partial Approval*: If the party receiving a Claim approves the Claim in part and denies it in part, such action will be final and binding unless within 30 days of such action the other party invokes the procedure set forth in Article 17 for final resolution of disputes.

F. *Denial of Claim*: If efforts to resolve a Claim are not successful, the party receiving the Claim may deny it by giving written notice of denial to the other party. If the receiving party does not take action on the Claim within 90 days, then either Owner or Contractor may at any time thereafter submit a letter to the other party indicating that as a result of the inaction, the Claim is deemed denied, thereby commencing the time for appeal of the denial. A denial of the Claim will be final and binding unless within 30 days of the denial the other party invokes the procedure set forth in Article 17 for the final resolution of disputes.

G. *Final and Binding Results*: If the parties reach a mutual agreement regarding a Claim, whether through approval of the Claim, direct negotiations, mediation, or otherwise; or if a Claim is approved in part and denied in part, or denied in full, and such actions become final and binding; then the results of the agreement or action on the Claim will be incorporated in a Change Order or other written document to the extent they affect the Contract, including the Work, the Contract Times, or the Contract Price.

ARTICLE 13—COST OF THE WORK; ALLOWANCES; UNIT PRICE WORK

13.01 *Cost of the Work*

A. *Purposes for Determination of Cost of the Work*: The term Cost of the Work means the sum of all costs necessary for the proper performance of the Work at issue, as further defined below. The provisions of this Paragraph 13.01 are used for two distinct purposes:

1. To determine Cost of the Work when Cost of the Work is a component of the Contract Price, under cost-plus-fee, time-and-materials, or other cost-based terms; or

2. When needed to determine the value of a Change Order, Change Proposal, Claim, set-off, or other adjustment in Contract Price. When the value of any such adjustment is determined on the basis of Cost of the Work, Contractor is entitled only to those additional or incremental costs required because of the change in the Work or because of the event giving rise to the adjustment.

B. *Costs Included*: Except as otherwise may be agreed to in writing by Owner, costs included in the Cost of the Work will be in amounts no higher than those commonly incurred in the locality of the Project, will not include any of the costs itemized in Paragraph 13.01.C, and will include only the following items:

1. Payroll costs for employees in the direct employ of Contractor in the performance of the Work under schedules of job classifications agreed upon by Owner and Contractor in advance of the subject Work. Such employees include, without limitation, superintendents, foremen, safety managers, safety representatives, and other personnel employed full time on the Work. Payroll costs for employees not employed full time on the Work will be apportioned on the basis of their time spent on the Work. Payroll costs include, but are not limited to, salaries and wages plus the cost of fringe

Copyright© 2018 National Society of Professional Engineers, American Council of Engineering Companies, and American Society of Civil Engineers. All rights reserved.

benefits, which include social security contributions, unemployment, excise, and payroll taxes, workers' compensation, health and retirement benefits, sick leave, and vacation and holiday pay applicable thereto. The expenses of performing Work outside of regular working hours, on Saturday, Sunday, or legal holidays, will be included in the above to the extent authorized by Owner.

2. Cost of all materials and equipment furnished and incorporated in the Work, including costs of transportation and storage thereof, and Suppliers' field services required in connection therewith. All cash discounts accrue to Contractor unless Owner deposits funds with Contractor with which to make payments, in which case the cash discounts will accrue to Owner. All trade discounts, rebates, and refunds and returns from sale of surplus materials and equipment will accrue to Owner, and Contractor shall make provisions so that they may be obtained.

3. Payments made by Contractor to Subcontractors for Work performed by Subcontractors. If required by Owner, Contractor shall obtain competitive bids from subcontractors acceptable to Owner and Contractor and shall deliver such bids to Owner, which will then determine, with the advice of Engineer, which bids, if any, will be acceptable. If any subcontract provides that the Subcontractor is to be paid on the basis of Cost of the Work plus a fee, the Subcontractor's Cost of the Work and fee will be determined in the same manner as Contractor's Cost of the Work and fee as provided in this Paragraph 13.01.

4. Costs of special consultants (including but not limited to engineers, architects, testing laboratories, surveyors, attorneys, and accountants) employed or retained for services specifically related to the Work.

5. Other costs consisting of the following:

    a. The proportion of necessary transportation, travel, and subsistence expenses of Contractor's employees incurred in discharge of duties connected with the Work.

    b. Cost, including transportation and maintenance, of all materials, supplies, equipment, machinery, appliances, office, and temporary facilities at the Site, which are consumed in the performance of the Work, and cost, less market value, of such items used but not consumed which remain the property of Contractor.

        1) In establishing included costs for materials such as scaffolding, plating, or sheeting, consideration will be given to the actual or the estimated life of the material for use on other projects; or rental rates may be established on the basis of purchase or salvage value of such items, whichever is less. Contractor will not be eligible for compensation for such items in an amount that exceeds the purchase cost of such item.

    c. *Construction Equipment Rental*

        1) Rentals of all construction equipment and machinery, and the parts thereof, in accordance with rental agreements approved by Owner as to price (including any surcharge or special rates applicable to overtime use of the construction equipment or machinery), and the costs of transportation, loading, unloading, assembly, dismantling, and removal thereof. All such costs will be in accordance with the terms of said rental agreements. The rental of any such equipment,

Copyright© 2018 National Society of Professional Engineers, American Council of Engineering Companies, and American Society of Civil Engineers. All rights reserved.

machinery, or parts must cease when the use thereof is no longer necessary for the Work.

2) Costs for equipment and machinery owned by Contractor or a Contractor-related entity will be paid at a rate shown for such equipment in the equipment rental rate book specified in the Supplementary Conditions. An hourly rate will be computed by dividing the monthly rates by 176. These computed rates will include all operating costs.

3) With respect to Work that is the result of a Change Order, Change Proposal, Claim, set-off, or other adjustment in Contract Price ("changed Work"), included costs will be based on the time the equipment or machinery is in use on the changed Work and the costs of transportation, loading, unloading, assembly, dismantling, and removal when directly attributable to the changed Work. The cost of any such equipment or machinery, or parts thereof, must cease to accrue when the use thereof is no longer necessary for the changed Work.

d. Sales, consumer, use, and other similar taxes related to the Work, and for which Contractor is liable, as imposed by Laws and Regulations.

e. Deposits lost for causes other than negligence of Contractor, any Subcontractor, or anyone directly or indirectly employed by any of them or for whose acts any of them may be liable, and royalty payments and fees for permits and licenses.

f. Losses and damages (and related expenses) caused by damage to the Work, not compensated by insurance or otherwise, sustained by Contractor in connection with the performance of the Work (except losses and damages within the deductible amounts of builder's risk or other property insurance established in accordance with Paragraph 6.04), provided such losses and damages have resulted from causes other than the negligence of Contractor, any Subcontractor, or anyone directly or indirectly employed by any of them or for whose acts any of them may be liable. Such losses include settlements made with the written consent and approval of Owner. No such losses, damages, and expenses will be included in the Cost of the Work for the purpose of determining Contractor's fee.

g. The cost of utilities, fuel, and sanitary facilities at the Site.

h. Minor expenses such as communication service at the Site, express and courier services, and similar petty cash items in connection with the Work.

i. The costs of premiums for all bonds and insurance that Contractor is required by the Contract Documents to purchase and maintain.

C. *Costs Excluded*: The term Cost of the Work does not include any of the following items:

1. Payroll costs and other compensation of Contractor's officers, executives, principals, general managers, engineers, architects, estimators, attorneys, auditors, accountants, purchasing and contracting agents, expediters, timekeepers, clerks, and other personnel employed by Contractor, whether at the Site or in Contractor's principal or branch office for general administration of the Work and not specifically included in the agreed upon schedule of job classifications referred to in Paragraph 13.01.B.1 or specifically covered by Paragraph 13.01.B.4. The payroll costs and other compensation excluded here are to be considered administrative costs covered by the Contractor's fee.

Copyright© 2018 National Society of Professional Engineers, American Council of Engineering Companies, and American Society of Civil Engineers. All rights reserved.

2. The cost of purchasing, renting, or furnishing small tools and hand tools.

3. Expenses of Contractor's principal and branch offices other than Contractor's office at the Site.

4. Any part of Contractor's capital expenses, including interest on Contractor's capital employed for the Work and charges against Contractor for delinquent payments.

5. Costs due to the negligence of Contractor, any Subcontractor, or anyone directly or indirectly employed by any of them or for whose acts any of them may be liable, including but not limited to, the correction of defective Work, disposal of materials or equipment wrongly supplied, and making good any damage to property.

6. Expenses incurred in preparing and advancing Claims.

7. Other overhead or general expense costs of any kind and the costs of any item not specifically and expressly included in Paragraph 13.01.B.

D. *Contractor's Fee*

1. When the Work as a whole is performed on the basis of cost-plus-a-fee, then:

a. Contractor's fee for the Work set forth in the Contract Documents as of the Effective Date of the Contract will be determined as set forth in the Agreement.

b. for any Work covered by a Change Order, Change Proposal, Claim, set-off, or other adjustment in Contract Price on the basis of Cost of the Work, Contractor's fee will be determined as follows:

1) When the fee for the Work as a whole is a percentage of the Cost of the Work, the fee will automatically adjust as the Cost of the Work changes.

2) When the fee for the Work as a whole is a fixed fee, the fee for any additions or deletions will be determined in accordance with Paragraph 11.07.C.2.

2. When the Work as a whole is performed on the basis of a stipulated sum, or any other basis other than cost-plus-a-fee, then Contractor's fee for any Work covered by a Change Order, Change Proposal, Claim, set-off, or other adjustment in Contract Price on the basis of Cost of the Work will be determined in accordance with Paragraph 11.07.C.2.

E. *Documentation and Audit*: Whenever the Cost of the Work for any purpose is to be determined pursuant to this Article 13, Contractor and pertinent Subcontractors will establish and maintain records of the costs in accordance with generally accepted accounting practices. Subject to prior written notice, Owner will be afforded reasonable access, during normal business hours, to all Contractor's accounts, records, books, correspondence, instructions, drawings, receipts, vouchers, memoranda, and similar data relating to the Cost of the Work and Contractor's fee. Contractor shall preserve all such documents for a period of three years after the final payment by Owner. Pertinent Subcontractors will afford such access to Owner, and preserve such documents, to the same extent required of Contractor.

Copyright© 2018 National Society of Professional Engineers, American Council of Engineering Companies, and American Society of Civil Engineers. All rights reserved.

13.02 *Allowances*

A. It is understood that Contractor has included in the Contract Price all allowances so named in the Contract Documents and shall cause the Work so covered to be performed for such sums and by such persons or entities as may be acceptable to Owner and Engineer.

B. *Cash Allowances*: Contractor agrees that:

1. the cash allowances include the cost to Contractor (less any applicable trade discounts) of materials and equipment required by the allowances to be delivered at the Site, and all applicable taxes; and

2. Contractor's costs for unloading and handling on the Site, labor, installation, overhead, profit, and other expenses contemplated for the cash allowances have been included in the Contract Price and not in the allowances, and no demand for additional payment for any of the foregoing will be valid.

C. *Owner's Contingency Allowance*: Contractor agrees that an Owner's contingency allowance, if any, is for the sole use of Owner to cover unanticipated costs.

D. Prior to final payment, an appropriate Change Order will be issued as recommended by Engineer to reflect actual amounts due Contractor for Work covered by allowances, and the Contract Price will be correspondingly adjusted.

13.03 *Unit Price Work*

A. Where the Contract Documents provide that all or part of the Work is to be Unit Price Work, initially the Contract Price will be deemed to include for all Unit Price Work an amount equal to the sum of the unit price for each separately identified item of Unit Price Work times the estimated quantity of each item as indicated in the Agreement.

B. The estimated quantities of items of Unit Price Work are not guaranteed and are solely for the purpose of comparison of Bids and determining an initial Contract Price. Payments to Contractor for Unit Price Work will be based on actual quantities.

C. Each unit price will be deemed to include an amount considered by Contractor to be adequate to cover Contractor's overhead and profit for each separately identified item.

D. Engineer will determine the actual quantities and classifications of Unit Price Work performed by Contractor. Engineer will review with Contractor the Engineer's preliminary determinations on such matters before rendering a written decision thereon (by recommendation of an Application for Payment or otherwise). Engineer's written decision thereon will be final and binding (except as modified by Engineer to reflect changed factual conditions or more accurate data) upon Owner and Contractor, and the final adjustment of Contract Price will be set forth in a Change Order, subject to the provisions of the following paragraph.

E. *Adjustments in Unit Price*

1. Contractor or Owner shall be entitled to an adjustment in the unit price with respect to an item of Unit Price Work if:

a. the quantity of the item of Unit Price Work performed by Contractor differs materially and significantly from the estimated quantity of such item indicated in the Agreement; and

Copyright© 2018 National Society of Professional Engineers, American Council of Engineering Companies, and American Society of Civil Engineers. All rights reserved.

b. Contractor's unit costs to perform the item of Unit Price Work have changed materially and significantly as a result of the quantity change.

2. The adjustment in unit price will account for and be coordinated with any related changes in quantities of other items of Work, and in Contractor's costs to perform such other Work, such that the resulting overall change in Contract Price is equitable to Owner and Contractor.

3. Adjusted unit prices will apply to all units of that item.

ARTICLE 14—TESTS AND INSPECTIONS; CORRECTION, REMOVAL, OR ACCEPTANCE OF DEFECTIVE WORK

14.01 *Access to Work*

A. Owner, Engineer, their consultants and other representatives and personnel of Owner, independent testing laboratories, and authorities having jurisdiction have access to the Site and the Work at reasonable times for their observation, inspection, and testing. Contractor shall provide them proper and safe conditions for such access and advise them of Contractor's safety procedures and programs so that they may comply with such procedures and programs as applicable.

14.02 *Tests, Inspections, and Approvals*

A. Contractor shall give Engineer timely notice of readiness of the Work (or specific parts thereof) for all required inspections and tests, and shall cooperate with inspection and testing personnel to facilitate required inspections and tests.

B. Owner shall retain and pay for the services of an independent inspector, testing laboratory, or other qualified individual or entity to perform all inspections and tests expressly required by the Contract Documents to be furnished and paid for by Owner, except that costs incurred in connection with tests or inspections of covered Work will be governed by the provisions of Paragraph 14.05.

C. If Laws or Regulations of any public body having jurisdiction require any Work (or part thereof) specifically to be inspected, tested, or approved by an employee or other representative of such public body, Contractor shall assume full responsibility for arranging and obtaining such inspections, tests, or approvals, pay all costs in connection therewith, and furnish Engineer the required certificates of inspection or approval.

D. Contractor shall be responsible for arranging, obtaining, and paying for all inspections and tests required:

1. by the Contract Documents, unless the Contract Documents expressly allocate responsibility for a specific inspection or test to Owner;

2. to attain Owner's and Engineer's acceptance of materials or equipment to be incorporated in the Work;

3. by manufacturers of equipment furnished under the Contract Documents;

4. for testing, adjusting, and balancing of mechanical, electrical, and other equipment to be incorporated into the Work; and

Copyright© 2018 National Society of Professional Engineers, American Council of Engineering Companies, and American Society of Civil Engineers. All rights reserved.

5. for acceptance of materials, mix designs, or equipment submitted for approval prior to Contractor's purchase thereof for incorporation in the Work.

Such inspections and tests will be performed by independent inspectors, testing laboratories, or other qualified individuals or entities acceptable to Owner and Engineer.

E. If the Contract Documents require the Work (or part thereof) to be approved by Owner, Engineer, or another designated individual or entity, then Contractor shall assume full responsibility for arranging and obtaining such approvals.

F. If any Work (or the work of others) that is to be inspected, tested, or approved is covered by Contractor without written concurrence of Engineer, Contractor shall, if requested by Engineer, uncover such Work for observation. Such uncovering will be at Contractor's expense unless Contractor had given Engineer timely notice of Contractor's intention to cover the same and Engineer had not acted with reasonable promptness in response to such notice.

14.03 *Defective Work*

A. *Contractor's Obligation*: It is Contractor's obligation to assure that the Work is not defective.

B. *Engineer's Authority*: Engineer has the authority to determine whether Work is defective, and to reject defective Work.

C. *Notice of Defects*: Prompt written notice of all defective Work of which Owner or Engineer has actual knowledge will be given to Contractor.

D. *Correction, or Removal and Replacement*: Promptly after receipt of written notice of defective Work, Contractor shall correct all such defective Work, whether or not fabricated, installed, or completed, or, if Engineer has rejected the defective Work, remove it from the Project and replace it with Work that is not defective.

E. *Preservation of Warranties*: When correcting defective Work, Contractor shall take no action that would void or otherwise impair Owner's special warranty and guarantee, if any, on said Work.

F. *Costs and Damages*: In addition to its correction, removal, and replacement obligations with respect to defective Work, Contractor shall pay all claims, costs, losses, and damages arising out of or relating to defective Work, including but not limited to the cost of the inspection, testing, correction, removal, replacement, or reconstruction of such defective Work, fines levied against Owner by governmental authorities because the Work is defective, and the costs of repair or replacement of work of others resulting from defective Work. Prior to final payment, if Owner and Contractor are unable to agree as to the measure of such claims, costs, losses, and damages resulting from defective Work, then Owner may impose a reasonable set-off against payments due under Article 15.

14.04 *Acceptance of Defective Work*

A. If, instead of requiring correction or removal and replacement of defective Work, Owner prefers to accept it, Owner may do so (subject, if such acceptance occurs prior to final payment, to Engineer's confirmation that such acceptance is in general accord with the design intent and applicable engineering principles, and will not endanger public safety). Contractor shall pay all claims, costs, losses, and damages attributable to Owner's evaluation of and determination to accept such defective Work (such costs to be approved

Copyright© 2018 National Society of Professional Engineers, American Council of Engineering Companies, and American Society of Civil Engineers. All rights reserved.

by Engineer as to reasonableness), and for the diminished value of the Work to the extent not otherwise paid by Contractor. If any such acceptance occurs prior to final payment, the necessary revisions in the Contract Documents with respect to the Work will be incorporated in a Change Order. If the parties are unable to agree as to the decrease in the Contract Price, reflecting the diminished value of Work so accepted, then Owner may impose a reasonable set-off against payments due under Article 15. If the acceptance of defective Work occurs after final payment, Contractor shall pay an appropriate amount to Owner.

14.05 *Uncovering Work*

A. Engineer has the authority to require additional inspection or testing of the Work, whether or not the Work is fabricated, installed, or completed.

B. If any Work is covered contrary to the written request of Engineer, then Contractor shall, if requested by Engineer, uncover such Work for Engineer's observation, and then replace the covering, all at Contractor's expense.

C. If Engineer considers it necessary or advisable that covered Work be observed by Engineer or inspected or tested by others, then Contractor, at Engineer's request, shall uncover, expose, or otherwise make available for observation, inspection, or testing as Engineer may require, that portion of the Work in question, and provide all necessary labor, material, and equipment.

1. If it is found that the uncovered Work is defective, Contractor shall be responsible for all claims, costs, losses, and damages arising out of or relating to such uncovering, exposure, observation, inspection, and testing, and of satisfactory replacement or reconstruction (including but not limited to all costs of repair or replacement of work of others); and pending Contractor's full discharge of this responsibility the Owner shall be entitled to impose a reasonable set-off against payments due under Article 15.

2. If the uncovered Work is not found to be defective, Contractor shall be allowed an increase in the Contract Price or an extension of the Contract Times, directly attributable to such uncovering, exposure, observation, inspection, testing, replacement, and reconstruction. If the parties are unable to agree as to the amount or extent thereof, then Contractor may submit a Change Proposal within 30 days of the determination that the Work is not defective.

14.06 *Owner May Stop the Work*

A. If the Work is defective, or Contractor fails to supply sufficient skilled workers or suitable materials or equipment, or fails to perform the Work in such a way that the completed Work will conform to the Contract Documents, then Owner may order Contractor to stop the Work, or any portion thereof, until the cause for such order has been eliminated; however, this right of Owner to stop the Work will not give rise to any duty on the part of Owner to exercise this right for the benefit of Contractor, any Subcontractor, any Supplier, any other individual or entity, or any surety for, or employee or agent of any of them.

14.07 *Owner May Correct Defective Work*

A. If Contractor fails within a reasonable time after written notice from Engineer to correct defective Work, or to remove and replace defective Work as required by Engineer, then

Copyright© 2018 National Society of Professional Engineers, American Council of Engineering Companies, and American Society of Civil Engineers. All rights reserved.

Owner may, after 7 days' written notice to Contractor, correct or remedy any such deficiency.

B. In exercising the rights and remedies under this Paragraph 14.07, Owner shall proceed expeditiously. In connection with such corrective or remedial action, Owner may exclude Contractor from all or part of the Site, take possession of all or part of the Work and suspend Contractor's services related thereto, and incorporate in the Work all materials and equipment stored at the Site or for which Owner has paid Contractor but which are stored elsewhere. Contractor shall allow Owner, Owner's representatives, agents and employees, Owner's other contractors, and Engineer and Engineer's consultants access to the Site to enable Owner to exercise the rights and remedies under this paragraph.

C. All claims, costs, losses, and damages incurred or sustained by Owner in exercising the rights and remedies under this Paragraph 14.07 will be charged against Contractor as set-offs against payments due under Article 15. Such claims, costs, losses and damages will include but not be limited to all costs of repair, or replacement of work of others destroyed or damaged by correction, removal, or replacement of Contractor's defective Work.

D. Contractor shall not be allowed an extension of the Contract Times because of any delay in the performance of the Work attributable to the exercise by Owner of Owner's rights and remedies under this Paragraph 14.07.

ARTICLE 15—PAYMENTS TO CONTRACTOR; SET-OFFS; COMPLETION; CORRECTION PERIOD

15.01 *Progress Payments*

A. *Basis for Progress Payments*: The Schedule of Values established as provided in Article 2 will serve as the basis for progress payments and will be incorporated into a form of Application for Payment acceptable to Engineer. Progress payments for Unit Price Work will be based on the number of units completed during the pay period, as determined under the provisions of Paragraph 13.03. Progress payments for cost-based Work will be based on Cost of the Work completed by Contractor during the pay period.

B. *Applications for Payments*

1. At least 20 days before the date established in the Agreement for each progress payment (but not more often than once a month), Contractor shall submit to Engineer for review an Application for Payment filled out and signed by Contractor covering the Work completed as of the date of the Application and accompanied by such supporting documentation as is required by the Contract Documents.

2. If payment is requested on the basis of materials and equipment not incorporated in the Work but delivered and suitably stored at the Site or at another location agreed to in writing, the Application for Payment must also be accompanied by: (a) a bill of sale, invoice, copies of subcontract or purchase order payments, or other documentation establishing full payment by Contractor for the materials and equipment; (b) at Owner's request, documentation warranting that Owner has received the materials and equipment free and clear of all Liens; and (c) evidence that the materials and equipment are covered by appropriate property insurance, a warehouse bond, or other arrangements to protect Owner's interest therein, all of which must be satisfactory to Owner.

Copyright© 2018 National Society of Professional Engineers, American Council of Engineering Companies, and American Society of Civil Engineers. All rights reserved.

3. Beginning with the second Application for Payment, each Application must include an affidavit of Contractor stating that all previous progress payments received by Contractor have been applied to discharge Contractor's legitimate obligations associated with prior Applications for Payment.

4. The amount of retainage with respect to progress payments will be as stipulated in the Agreement.

C. *Review of Applications*

1. Engineer will, within 10 days after receipt of each Application for Payment, including each resubmittal, either indicate in writing a recommendation of payment and present the Application to Owner, or return the Application to Contractor indicating in writing Engineer's reasons for refusing to recommend payment. In the latter case, Contractor may make the necessary corrections and resubmit the Application.

2. Engineer's recommendation of any payment requested in an Application for Payment will constitute a representation by Engineer to Owner, based on Engineer's observations of the executed Work as an experienced and qualified design professional, and on Engineer's review of the Application for Payment and the accompanying data and schedules, that to the best of Engineer's knowledge, information and belief:

   a. the Work has progressed to the point indicated;

   b. the quality of the Work is generally in accordance with the Contract Documents (subject to an evaluation of the Work as a functioning whole prior to or upon Substantial Completion, the results of any subsequent tests called for in the Contract Documents, a final determination of quantities and classifications for Unit Price Work under Paragraph 13.03, and any other qualifications stated in the recommendation); and

   c. the conditions precedent to Contractor's being entitled to such payment appear to have been fulfilled in so far as it is Engineer's responsibility to observe the Work.

3. By recommending any such payment Engineer will not thereby be deemed to have represented that:

   a. inspections made to check the quality or the quantity of the Work as it has been performed have been exhaustive, extended to every aspect of the Work in progress, or involved detailed inspections of the Work beyond the responsibilities specifically assigned to Engineer in the Contract; or

   b. there may not be other matters or issues between the parties that might entitle Contractor to be paid additionally by Owner or entitle Owner to withhold payment to Contractor.

4. Neither Engineer's review of Contractor's Work for the purposes of recommending payments nor Engineer's recommendation of any payment, including final payment, will impose responsibility on Engineer:

   a. to supervise, direct, or control the Work;

   b. for the means, methods, techniques, sequences, or procedures of construction, or the safety precautions and programs incident thereto;

Copyright© 2018 National Society of Professional Engineers, American Council of Engineering Companies, and American Society of Civil Engineers. All rights reserved.

c. for Contractor's failure to comply with Laws and Regulations applicable to Contractor's performance of the Work;

d. to make any examination to ascertain how or for what purposes Contractor has used the money paid by Owner; or

e. to determine that title to any of the Work, materials, or equipment has passed to Owner free and clear of any Liens.

5. Engineer may refuse to recommend the whole or any part of any payment if, in Engineer's opinion, it would be incorrect to make the representations to Owner stated in Paragraph 15.01.C.2.

6. Engineer will recommend reductions in payment (set-offs) necessary in Engineer's opinion to protect Owner from loss because:

a. the Work is defective, requiring correction or replacement;

b. the Contract Price has been reduced by Change Orders;

c. Owner has been required to correct defective Work in accordance with Paragraph 14.07, or has accepted defective Work pursuant to Paragraph 14.04;

d. Owner has been required to remove or remediate a Hazardous Environmental Condition for which Contractor is responsible; or

e. Engineer has actual knowledge of the occurrence of any of the events that would constitute a default by Contractor and therefore justify termination for cause under the Contract Documents.

D. *Payment Becomes Due*

1. Ten days after presentation of the Application for Payment to Owner with Engineer's recommendation, the amount recommended (subject to any Owner set-offs) will become due, and when due will be paid by Owner to Contractor.

E. *Reductions in Payment by Owner*

1. In addition to any reductions in payment (set-offs) recommended by Engineer, Owner is entitled to impose a set-off against payment based on any of the following:

a. Claims have been made against Owner based on Contractor's conduct in the performance or furnishing of the Work, or Owner has incurred costs, losses, or damages resulting from Contractor's conduct in the performance or furnishing of the Work, including but not limited to claims, costs, losses, or damages from workplace injuries, adjacent property damage, non-compliance with Laws and Regulations, and patent infringement;

b. Contractor has failed to take reasonable and customary measures to avoid damage, delay, disruption, and interference with other work at or adjacent to the Site;

c. Contractor has failed to provide and maintain required bonds or insurance;

d. Owner has been required to remove or remediate a Hazardous Environmental Condition for which Contractor is responsible;

Copyright© 2018 National Society of Professional Engineers, American Council of Engineering Companies, and American Society of Civil Engineers. All rights reserved.

e. Owner has incurred extra charges or engineering costs related to submittal reviews, evaluations of proposed substitutes, tests and inspections, or return visits to manufacturing or assembly facilities;

f. The Work is defective, requiring correction or replacement;

g. Owner has been required to correct defective Work in accordance with Paragraph 14.07, or has accepted defective Work pursuant to Paragraph 14.04;

h. The Contract Price has been reduced by Change Orders;

i. An event has occurred that would constitute a default by Contractor and therefore justify a termination for cause;

j. Liquidated or other damages have accrued as a result of Contractor's failure to achieve Milestones, Substantial Completion, or final completion of the Work;

k. Liens have been filed in connection with the Work, except where Contractor has delivered a specific bond satisfactory to Owner to secure the satisfaction and discharge of such Liens; or

l. Other items entitle Owner to a set-off against the amount recommended.

2. If Owner imposes any set-off against payment, whether based on its own knowledge or on the written recommendations of Engineer, Owner will give Contractor immediate written notice (with a copy to Engineer) stating the reasons for such action and the specific amount of the reduction, and promptly pay Contractor any amount remaining after deduction of the amount so withheld. Owner shall promptly pay Contractor the amount so withheld, or any adjustment thereto agreed to by Owner and Contractor, if Contractor remedies the reasons for such action. The reduction imposed will be binding on Contractor unless it duly submits a Change Proposal contesting the reduction.

3. Upon a subsequent determination that Owner's refusal of payment was not justified, the amount wrongfully withheld will be treated as an amount due as determined by Paragraph 15.01.D.1 and subject to interest as provided in the Agreement.

15.02 *Contractor's Warranty of Title*

A. Contractor warrants and guarantees that title to all Work, materials, and equipment furnished under the Contract will pass to Owner free and clear of (1) all Liens and other title defects, and (2) all patent, licensing, copyright, or royalty obligations, no later than 7 days after the time of payment by Owner.

15.03 *Substantial Completion*

A. When Contractor considers the entire Work ready for its intended use Contractor shall notify Owner and Engineer in writing that the entire Work is substantially complete and request that Engineer issue a certificate of Substantial Completion. Contractor shall at the same time submit to Owner and Engineer an initial draft of punch list items to be completed or corrected before final payment.

B. Promptly after Contractor's notification, Owner, Contractor, and Engineer shall make an inspection of the Work to determine the status of completion. If Engineer does not consider the Work substantially complete, Engineer will notify Contractor in writing giving the reasons therefor.

Copyright© 2018 National Society of Professional Engineers, American Council of Engineering Companies, and American Society of Civil Engineers. All rights reserved.

C. If Engineer considers the Work substantially complete, Engineer will deliver to Owner a preliminary certificate of Substantial Completion which will fix the date of Substantial Completion. Engineer shall attach to the certificate a punch list of items to be completed or corrected before final payment. Owner shall have 7 days after receipt of the preliminary certificate during which to make written objection to Engineer as to any provisions of the certificate or attached punch list. If, after considering the objections to the provisions of the preliminary certificate, Engineer concludes that the Work is not substantially complete, Engineer will, within 14 days after submission of the preliminary certificate to Owner, notify Contractor in writing that the Work is not substantially complete, stating the reasons therefor. If Owner does not object to the provisions of the certificate, or if despite consideration of Owner's objections Engineer concludes that the Work is substantially complete, then Engineer will, within said 14 days, execute and deliver to Owner and Contractor a final certificate of Substantial Completion (with a revised punch list of items to be completed or corrected) reflecting such changes from the preliminary certificate as Engineer believes justified after consideration of any objections from Owner.

D. At the time of receipt of the preliminary certificate of Substantial Completion, Owner and Contractor will confer regarding Owner's use or occupancy of the Work following Substantial Completion, review the builder's risk insurance policy with respect to the end of the builder's risk coverage, and confirm the transition to coverage of the Work under a permanent property insurance policy held by Owner. Unless Owner and Contractor agree otherwise in writing, Owner shall bear responsibility for security, operation, protection of the Work, property insurance, maintenance, heat, and utilities upon Owner's use or occupancy of the Work.

E. After Substantial Completion the Contractor shall promptly begin work on the punch list of items to be completed or corrected prior to final payment. In appropriate cases Contractor may submit monthly Applications for Payment for completed punch list items, following the progress payment procedures set forth above.

F. Owner shall have the right to exclude Contractor from the Site after the date of Substantial Completion subject to allowing Contractor reasonable access to remove its property and complete or correct items on the punch list.

15.04 *Partial Use or Occupancy*

A. Prior to Substantial Completion of all the Work, Owner may use or occupy any substantially completed part of the Work which has specifically been identified in the Contract Documents, or which Owner, Engineer, and Contractor agree constitutes a separately functioning and usable part of the Work that can be used by Owner for its intended purpose without significant interference with Contractor's performance of the remainder of the Work, subject to the following conditions:

1. At any time, Owner may request in writing that Contractor permit Owner to use or occupy any such part of the Work that Owner believes to be substantially complete. If and when Contractor agrees that such part of the Work is substantially complete, Contractor, Owner, and Engineer will follow the procedures of Paragraph 15.03.A through 15.03.E for that part of the Work.

Copyright© 2018 National Society of Professional Engineers, American Council of Engineering Companies, and American Society of Civil Engineers. All rights reserved.

2. At any time, Contractor may notify Owner and Engineer in writing that Contractor considers any such part of the Work substantially complete and request Engineer to issue a certificate of Substantial Completion for that part of the Work.

3. Within a reasonable time after either such request, Owner, Contractor, and Engineer shall make an inspection of that part of the Work to determine its status of completion. If Engineer does not consider that part of the Work to be substantially complete, Engineer will notify Owner and Contractor in writing giving the reasons therefor. If Engineer considers that part of the Work to be substantially complete, the provisions of Paragraph 15.03 will apply with respect to certification of Substantial Completion of that part of the Work and the division of responsibility in respect thereof and access thereto.

4. No use or occupancy or separate operation of part of the Work may occur prior to compliance with the requirements of Paragraph 6.04 regarding builder's risk or other property insurance.

15.05 *Final Inspection*

A. Upon written notice from Contractor that the entire Work or an agreed portion thereof is complete, Engineer will promptly make a final inspection with Owner and Contractor and will notify Contractor in writing of all particulars in which this inspection reveals that the Work, or agreed portion thereof, is incomplete or defective. Contractor shall immediately take such measures as are necessary to complete such Work or remedy such deficiencies.

15.06 *Final Payment*

A. *Application for Payment*

1. After Contractor has, in the opinion of Engineer, satisfactorily completed all corrections identified during the final inspection and has delivered, in accordance with the Contract Documents, all maintenance and operating instructions, schedules, guarantees, bonds, certificates or other evidence of insurance, certificates of inspection, annotated record documents (as provided in Paragraph 7.12), and other documents, Contractor may make application for final payment.

2. The final Application for Payment must be accompanied (except as previously delivered) by:

a. all documentation called for in the Contract Documents;

b. consent of the surety, if any, to final payment;

c. satisfactory evidence that all title issues have been resolved such that title to all Work, materials, and equipment has passed to Owner free and clear of any Liens or other title defects, or will so pass upon final payment.

d. a list of all duly pending Change Proposals and Claims; and

e. complete and legally effective releases or waivers (satisfactory to Owner) of all Lien rights arising out of the Work, and of Liens filed in connection with the Work.

3. In lieu of the releases or waivers of Liens specified in Paragraph 15.06.A.2 and as approved by Owner, Contractor may furnish receipts or releases in full and an affidavit of Contractor that: (a) the releases and receipts include all labor, services, material, and equipment for which a Lien could be filed; and (b) all payrolls, material and equipment

Copyright© 2018 National Society of Professional Engineers, American Council of Engineering Companies, and American Society of Civil Engineers. All rights reserved.

bills, and other indebtedness connected with the Work for which Owner might in any way be responsible, or which might in any way result in liens or other burdens on Owner's property, have been paid or otherwise satisfied. If any Subcontractor or Supplier fails to furnish such a release or receipt in full, Contractor may furnish a bond or other collateral satisfactory to Owner to indemnify Owner against any Lien, or Owner at its option may issue joint checks payable to Contractor and specified Subcontractors and Suppliers.

B. *Engineer's Review of Final Application and Recommendation of Payment*: If, on the basis of Engineer's observation of the Work during construction and final inspection, and Engineer's review of the final Application for Payment and accompanying documentation as required by the Contract Documents, Engineer is satisfied that the Work has been completed and Contractor's other obligations under the Contract have been fulfilled, Engineer will, within 10 days after receipt of the final Application for Payment, indicate in writing Engineer's recommendation of final payment and present the final Application for Payment to Owner for payment. Such recommendation will account for any set-offs against payment that are necessary in Engineer's opinion to protect Owner from loss for the reasons stated above with respect to progress payments. Otherwise, Engineer will return the Application for Payment to Contractor, indicating in writing the reasons for refusing to recommend final payment, in which case Contractor shall make the necessary corrections and resubmit the Application for Payment.

C. *Notice of Acceptability*: In support of its recommendation of payment of the final Application for Payment, Engineer will also give written notice to Owner and Contractor that the Work is acceptable, subject to stated limitations in the notice and to the provisions of Paragraph 15.07.

D. *Completion of Work*: The Work is complete (subject to surviving obligations) when it is ready for final payment as established by the Engineer's written recommendation of final payment and issuance of notice of the acceptability of the Work.

E. *Final Payment Becomes Due*: Upon receipt from Engineer of the final Application for Payment and accompanying documentation, Owner shall set off against the amount recommended by Engineer for final payment any further sum to which Owner is entitled, including but not limited to set-offs for liquidated damages and set-offs allowed under the provisions of this Contract with respect to progress payments. Owner shall pay the resulting balance due to Contractor within 30 days of Owner's receipt of the final Application for Payment from Engineer.

15.07 *Waiver of Claims*

A. By making final payment, Owner waives its claim or right to liquidated damages or other damages for late completion by Contractor, except as set forth in an outstanding Claim, appeal under the provisions of Article 17, set-off, or express reservation of rights by Owner. Owner reserves all other claims or rights after final payment.

B. The acceptance of final payment by Contractor will constitute a waiver by Contractor of all claims and rights against Owner other than those pending matters that have been duly submitted as a Claim, or appealed under the provisions of Article 17.

Copyright© 2018 National Society of Professional Engineers, American Council of Engineering Companies, and American Society of Civil Engineers. All rights reserved.

15.08 *Correction Period*

A. If within one year after the date of Substantial Completion (or such longer period of time as may be prescribed by the Supplementary Conditions or the terms of any applicable special guarantee required by the Contract Documents), Owner gives Contractor written notice that any Work has been found to be defective, or that Contractor's repair of any damages to the Site or adjacent areas has been found to be defective, then after receipt of such notice of defect Contractor shall promptly, without cost to Owner and in accordance with Owner's written instructions:

   1. correct the defective repairs to the Site or such adjacent areas;

   2. correct such defective Work;

   3. remove the defective Work from the Project and replace it with Work that is not defective, if the defective Work has been rejected by Owner, and

   4. satisfactorily correct or repair or remove and replace any damage to other Work, to the work of others, or to other land or areas resulting from the corrective measures.

B. Owner shall give any such notice of defect within 60 days of the discovery that such Work or repairs is defective. If such notice is given within such 60 days but after the end of the correction period, the notice will be deemed a notice of defective Work under Paragraph 7.17.B.

C. If, after receipt of a notice of defect within 60 days and within the correction period, Contractor does not promptly comply with the terms of Owner's written instructions, or in an emergency where delay would cause serious risk of loss or damage, Owner may have the defective Work corrected or repaired or may have the rejected Work removed and replaced. Contractor shall pay all costs, losses, and damages (including but not limited to all fees and charges of engineers, architects, attorneys, and other professionals and all court or arbitration or other dispute resolution costs) arising out of or relating to such correction or repair or such removal and replacement (including but not limited to all costs of repair or replacement of work of others). Contractor's failure to pay such costs, losses, and damages within 10 days of invoice from Owner will be deemed the start of an event giving rise to a Claim under Paragraph 12.01.B, such that any related Claim must be brought within 30 days of the failure to pay.

D. In special circumstances where a particular item of equipment is placed in continuous service before Substantial Completion of all the Work, the correction period for that item may start to run from an earlier date if so provided in the Specifications.

E. Where defective Work (and damage to other Work resulting therefrom) has been corrected or removed and replaced under this paragraph, the correction period hereunder with respect to such Work will be extended for an additional period of one year after such correction or removal and replacement has been satisfactorily completed.

F. Contractor's obligations under this paragraph are in addition to all other obligations and warranties. The provisions of this paragraph are not to be construed as a substitute for, or a waiver of, the provisions of any applicable statute of limitation or repose.

Copyright© 2018 National Society of Professional Engineers, American Council of Engineering Companies, and American Society of Civil Engineers. All rights reserved.

ARTICLE 16—SUSPENSION OF WORK AND TERMINATION

16.01 *Owner May Suspend Work*

A. At any time and without cause, Owner may suspend the Work or any portion thereof for a period of not more than 90 consecutive days by written notice to Contractor and Engineer. Such notice will fix the date on which Work will be resumed. Contractor shall resume the Work on the date so fixed. Contractor shall be entitled to an adjustment in the Contract Price or an extension of the Contract Times directly attributable to any such suspension. Any Change Proposal seeking such adjustments must be submitted no later than 30 days after the date fixed for resumption of Work.

16.02 *Owner May Terminate for Cause*

A. The occurrence of any one or more of the following events will constitute a default by Contractor and justify termination for cause:

1. Contractor's persistent failure to perform the Work in accordance with the Contract Documents (including, but not limited to, failure to supply sufficient skilled workers or suitable materials or equipment, or failure to adhere to the Progress Schedule);

2. Failure of Contractor to perform or otherwise to comply with a material term of the Contract Documents;

3. Contractor's disregard of Laws or Regulations of any public body having jurisdiction; or

4. Contractor's repeated disregard of the authority of Owner or Engineer.

B. If one or more of the events identified in Paragraph 16.02.A occurs, then after giving Contractor (and any surety) 10 days' written notice that Owner is considering a declaration that Contractor is in default and termination of the Contract, Owner may proceed to:

1. declare Contractor to be in default, and give Contractor (and any surety) written notice that the Contract is terminated; and

2. enforce the rights available to Owner under any applicable performance bond.

C. Subject to the terms and operation of any applicable performance bond, if Owner has terminated the Contract for cause, Owner may exclude Contractor from the Site, take possession of the Work, incorporate in the Work all materials and equipment stored at the Site or for which Owner has paid Contractor but which are stored elsewhere, and complete the Work as Owner may deem expedient.

D. Owner may not proceed with termination of the Contract under Paragraph 16.02.B if Contractor within 7 days of receipt of notice of intent to terminate begins to correct its failure to perform and proceeds diligently to cure such failure.

E. If Owner proceeds as provided in Paragraph 16.02.B, Contractor shall not be entitled to receive any further payment until the Work is completed. If the unpaid balance of the Contract Price exceeds the cost to complete the Work, including all related claims, costs, losses, and damages (including but not limited to all fees and charges of engineers, architects, attorneys, and other professionals) sustained by Owner, such excess will be paid to Contractor. If the cost to complete the Work including such related claims, costs, losses, and damages exceeds such unpaid balance, Contractor shall pay the difference to Owner. Such claims, costs, losses, and damages incurred by Owner will be reviewed by Engineer as

Copyright© 2018 National Society of Professional Engineers, American Council of Engineering Companies, and American Society of Civil Engineers. All rights reserved.

to their reasonableness and, when so approved by Engineer, incorporated in a Change Order. When exercising any rights or remedies under this paragraph, Owner shall not be required to obtain the lowest price for the Work performed.

F. Where Contractor's services have been so terminated by Owner, the termination will not affect any rights or remedies of Owner against Contractor then existing or which may thereafter accrue, or any rights or remedies of Owner against Contractor or any surety under any payment bond or performance bond. Any retention or payment of money due Contractor by Owner will not release Contractor from liability.

G. If and to the extent that Contractor has provided a performance bond under the provisions of Paragraph 6.01.A, the provisions of that bond will govern over any inconsistent provisions of Paragraphs 16.02.B and 16.02.D.

16.03 *Owner May Terminate for Convenience*

A. Upon 7 days' written notice to Contractor and Engineer, Owner may, without cause and without prejudice to any other right or remedy of Owner, terminate the Contract. In such case, Contractor shall be paid for (without duplication of any items):

1. completed and acceptable Work executed in accordance with the Contract Documents prior to the effective date of termination, including fair and reasonable sums for overhead and profit on such Work;

2. expenses sustained prior to the effective date of termination in performing services and furnishing labor, materials, or equipment as required by the Contract Documents in connection with uncompleted Work, plus fair and reasonable sums for overhead and profit on such expenses; and

3. other reasonable expenses directly attributable to termination, including costs incurred to prepare a termination for convenience cost proposal.

B. Contractor shall not be paid for any loss of anticipated profits or revenue, post-termination overhead costs, or other economic loss arising out of or resulting from such termination.

16.04 *Contractor May Stop Work or Terminate*

A. If, through no act or fault of Contractor, (1) the Work is suspended for more than 90 consecutive days by Owner or under an order of court or other public authority, or (2) Engineer fails to act on any Application for Payment within 30 days after it is submitted, or (3) Owner fails for 30 days to pay Contractor any sum finally determined to be due, then Contractor may, upon 7 days' written notice to Owner and Engineer, and provided Owner or Engineer do not remedy such suspension or failure within that time, terminate the contract and recover from Owner payment on the same terms as provided in Paragraph 16.03.

B. In lieu of terminating the Contract and without prejudice to any other right or remedy, if Engineer has failed to act on an Application for Payment within 30 days after it is submitted, or Owner has failed for 30 days to pay Contractor any sum finally determined to be due, Contractor may, 7 days after written notice to Owner and Engineer, stop the Work until payment is made of all such amounts due Contractor, including interest thereon. The provisions of this paragraph are not intended to preclude Contractor from submitting a Change Proposal for an adjustment in Contract Price or Contract Times or otherwise for expenses or damage directly attributable to Contractor's stopping the Work as permitted by this paragraph.

Copyright© 2018 National Society of Professional Engineers, American Council of Engineering Companies, and American Society of Civil Engineers. All rights reserved.

ARTICLE 17—FINAL RESOLUTION OF DISPUTES

17.01 *Methods and Procedures*

A. *Disputes Subject to Final Resolution*: The following disputed matters are subject to final resolution under the provisions of this article:

1. A timely appeal of an approval in part and denial in part of a Claim, or of a denial in full, pursuant to Article 12; and

2. Disputes between Owner and Contractor concerning the Work, or obligations under the Contract Documents, that arise after final payment has been made.

B. *Final Resolution of Disputes*: For any dispute subject to resolution under this article, Owner or Contractor may:

1. elect in writing to invoke the dispute resolution process provided for in the Supplementary Conditions;

2. agree with the other party to submit the dispute to another dispute resolution process; or

3. if no dispute resolution process is provided for in the Supplementary Conditions or mutually agreed to, give written notice to the other party of the intent to submit the dispute to a court of competent jurisdiction.

ARTICLE 18—MISCELLANEOUS

18.01 *Giving Notice*

A. Whenever any provision of the Contract requires the giving of written notice to Owner, Engineer, or Contractor, it will be deemed to have been validly given only if delivered:

1. in person, by a commercial courier service or otherwise, to the recipient's place of business;

2. by registered or certified mail, postage prepaid, to the recipient's place of business; or

3. by e-mail to the recipient, with the words "Formal Notice" or similar in the e-mail's subject line.

18.02 *Computation of Times*

A. When any period of time is referred to in the Contract by days, it will be computed to exclude the first and include the last day of such period. If the last day of any such period falls on a Saturday or Sunday or on a day made a legal holiday by the law of the applicable jurisdiction, such day will be omitted from the computation.

18.03 *Cumulative Remedies*

A. The duties and obligations imposed by these General Conditions and the rights and remedies available hereunder to the parties hereto are in addition to, and are not to be construed in any way as a limitation of, any rights and remedies available to any or all of them which are otherwise imposed or available by Laws or Regulations, by special warranty or guarantee, or by other provisions of the Contract. The provisions of this paragraph will be

Copyright© 2018 National Society of Professional Engineers, American Council of Engineering Companies, and American Society of Civil Engineers. All rights reserved.

as effective as if repeated specifically in the Contract Documents in connection with each particular duty, obligation, right, and remedy to which they apply.

18.04 *Limitation of Damages*

A. With respect to any and all Change Proposals, Claims, disputes subject to final resolution, and other matters at issue, neither Owner nor Engineer, nor any of their officers, directors, members, partners, employees, agents, consultants, or subcontractors, shall be liable to Contractor for any claims, costs, losses, or damages sustained by Contractor on or in connection with any other project or anticipated project.

18.05 *No Waiver*

A. A party's non-enforcement of any provision will not constitute a waiver of that provision, nor will it affect the enforceability of that provision or of the remainder of this Contract.

18.06 *Survival of Obligations*

A. All representations, indemnifications, warranties, and guarantees made in, required by, or given in accordance with the Contract, as well as all continuing obligations indicated in the Contract, will survive final payment, completion, and acceptance of the Work or termination of the Contract or of the services of Contractor.

18.07 *Controlling Law*

A. This Contract is to be governed by the law of the state in which the Project is located.

18.08 *Assignment of Contract*

A. Unless expressly agreed to elsewhere in the Contract, no assignment by a party to this Contract of any rights under or interests in the Contract will be binding on the other party without the written consent of the party sought to be bound; and, specifically but without limitation, money that may become due and money that is due may not be assigned without such consent (except to the extent that the effect of this restriction may be limited by law), and unless specifically stated to the contrary in any written consent to an assignment, no assignment will release or discharge the assignor from any duty or responsibility under the Contract.

18.09 *Successors and Assigns*

A. Owner and Contractor each binds itself, its successors, assigns, and legal representatives to the other party hereto, its successors, assigns, and legal representatives in respect to all covenants, agreements, and obligations contained in the Contract Documents.

18.10 *Headings*

A. Article and paragraph headings are inserted for convenience only and do not constitute parts of these General Conditions.

Copyright© 2018 National Society of Professional Engineers, American Council of Engineering Companies, and American Society of Civil Engineers. All rights reserved.

00800

Supplementary Conditions

SUPPLEMENTARY CONDITIONS OF THE CONSTRUCTION CONTRACT

TABLE OF CONTENTS

Page

Article 1— Definitions and Terminology 1

Article 2— Preliminary Matters.....1

Article 3— Contract Documents: Intent, Requirements, Reuse 5

Article 4— Commencement and Progress of the Work.....6

Article 5— Site, Subsurface and Physical Conditions, Hazardous Environmental Conditions 6

Article 6— Bonds and Insurance 7

Article 7— Contractor's Responsibilities..... 14

Article 8— Other Work at the Site 15

Article 9— Owner's Responsibilities 15

Article 10— Engineer's Status During Construction..... 16

Article 11— Changes to the Contract..... 17

Article 12— Claims 18

Article 13— Cost of Work; Allowances, Unit Price Work..... 18

Article 14— Tests and Inspections; Correction, Removal, or Accceptance of Defective Work 19

Article 15— Payments to Contractor, Set Offs; Completions; Correction Period..... 19

Article 16— Suspension of Work and Termination..... 20

Article 17— Final Resolutions of Disputes 20

Article 18— Miscellaneous..... 21

Exhibit A— Software Requirements for Electronic Document Exchange 1

Copyright© 2018 National Society of Professional Engineers, American Council of Engineering Companies, and American Society of Civil Engineers. All rights reserved.

SUPPLEMENTARY CONDITIONS OF THE CONSTRUCTION CONTRACT

These Supplementary Conditions amend or supplement EJCDC® C-700, Standard General Conditions of the Construction Contract (2018). The General Conditions remain in full force and effect except as amended.

The terms used in these Supplementary Conditions have the meanings stated in the General Conditions. Additional terms used in these Supplementary Conditions have the meanings stated below, which are applicable to both the singular and plural thereof.

The address system used in these Supplementary Conditions is the same as the address system used in the General Conditions, with the prefix "SC" added—for example, “Paragraph SC-4.05.”

ARTICLE 1—DEFINITIONS AND TERMINOLOGY

SC-1.01.A. Add the following terms:

State: The State of Indiana, including its agencies.

Submittal: Written product data, Shop Drawings, Samples, and other documentation required to be submitted by Contractor for Engineer’s review. The terms Shop Drawing and Sample, as used in the General Conditions, shall refer to Submittals unless the context indicates otherwise.

Remedial: See Defective in Section 00700 GC 1.02 Terminology.

ARTICLE 2—PRELIMINARY MATTERS

2.01 *Delivery of Bonds and Evidence of Insurance*

SC-2.01 Delete Paragraphs 2.01.B. and C. in their entirety and insert the following in their place:

B. *Evidence of Contractor’s Insurance:* When Contractor delivers the signed counterparts of the Agreement to Owner, Contractor shall also deliver to Owner copies of the policies (including all endorsements, and identification of applicable self-insured retentions and deductibles) of insurance required to be provided by Contractor in this Contract. Contractor may block out (redact) any confidential premium or pricing information contained in any policy or endorsement furnished under this provision.

2.02 *Copies of Documents*

SC-2.02 Amend the first sentence of Paragraph 2.02.A. to read as follows:

Owner shall furnish to Contractor **one (1)** printed copies of the Contract Documents (including one fully signed counterpart of the Agreement).

Copyright© 2018 National Society of Professional Engineers, American Council of Engineering Companies, and American Society of Civil Engineers. All rights reserved.

2.06 *Electronic Transmittals*

SC-2.06 Delete Paragraphs 2.06.B and 2.06.C in their entirety and insert the following in their place:

B. *Electronic Documents Protocol:* The parties shall conform to the following provisions in Paragraphs 2.06.B and 2.06.C, together referred to as the Electronic Documents Protocol ("EDP" or "Protocol") for exchange of electronic transmittals.

1. *Basic Requirements*

a. To the fullest extent practical, the parties agree to and will transmit and accept Electronic Documents in an electronic or digital format using the procedures described in this Protocol. Use of the Electronic Documents and any information contained therein is subject to the requirements of this Protocol and other provisions of the Contract.

b. The contents of the information in any Electronic Document will be the responsibility of the transmitting party.

c. Electronic Documents as exchanged by this Protocol may be used in the same manner as the printed versions of the same documents that are exchanged using non-electronic format and methods, subject to the same governing requirements, limitations, and restrictions, set forth in the Contract Documents.

d. Except as otherwise explicitly stated herein, the terms of this Protocol will be incorporated into any other agreement or subcontract between a party and any third party for any portion of the Work on the Project, or any Project-related services, where that third party is, either directly or indirectly, required to exchange Electronic Documents with a party or with Engineer. Nothing herein will modify the requirements of the Contract regarding communications between and among the parties and their subcontractors and consultants.

e. When transmitting Electronic Documents, the transmitting party makes no representations as to long term compatibility, usability, or readability of the items resulting from the receiving party's use of software application packages, operating systems, or computer hardware differing from those established in this Protocol.

f. Nothing herein negates any obligation 1) in the Contract to create, provide, or maintain an original printed record version of Drawings and Specifications, signed and sealed according to applicable Laws and Regulations; 2) to comply with any applicable Law or Regulation governing the signing and sealing of design documents or the signing and electronic transmission of any other documents; or 3) to comply with the notice requirements of Paragraph 18.01 of the General Conditions.

2. *System Infrastructure for Electronic Document Exchange*

a. Each party will provide hardware, operating system(s) software, internet, e-mail, and large file transfer functions ("System Infrastructure") at its own cost and sufficient for complying with the EDP requirements. With the exception of minimum standards set forth in this EDP, and any explicit system requirements specified by attachment to this EDP, it is the obligation of each party to determine, for itself, its own System Infrastructure.

Copyright© 2018 National Society of Professional Engineers, American Council of Engineering Companies, and American Society of Civil Engineers. All rights reserved.

1) The maximum size of an email attachment for exchange of Electronic Documents under this EDP is 15 MB. Attachments larger than that may be exchanged using large file transfer functions or physical media.

2) Each Party assumes full and complete responsibility for any and all of its own costs, delays, deficiencies, and errors associated with converting, translating, updating, verifying, licensing, or otherwise enabling its System Infrastructure, including operating systems and software, for use with respect to this EDP.

b. Each party is responsible for its own system operations, security, back-up, archiving, audits, printing resources, and other Information Technology ("IT") for maintaining operations of its System Infrastructure during the Project, including coordination with the party's individual(s) or entity responsible for managing its System Infrastructure and capable of addressing routine communications and other IT issues affecting the exchange of Electronic Documents.

c. Each party will operate and maintain industry-standard, industry-accepted, ISO-standard, commercial-grade security software and systems that are intended to protect the other party from: software viruses and other malicious software like worms, trojans, adware; data breaches; loss of confidentiality; and other threats in the transmission to or storage of information from the other parties, including transmission of Electronic Documents by physical media such as CD/DVD/flash drive/hard drive. To the extent that a party maintains and operates such security software and systems, it shall not be liable to the other party for any breach of system security.

d. In the case of disputes, conflicts, or modifications to the EDP required to address issues affecting System Infrastructure, the parties shall cooperatively resolve the issues; but, failing resolution, the Owner is authorized to make and require reasonable and necessary changes to the EDP to effectuate its original intent. If the changes cause additional cost or time to Contractor, not reasonably anticipated under the original EDP, Contractor may seek an adjustment in price or time under the appropriate process in the Contract.

e. Each party is responsible for its own back-up and archive of documents sent and received during the term of the contract under this EDP, unless this EDP establishes a Project document archive, either as part of a mandatory Project website or other communications protocol, upon which the parties may rely for document archiving during the specified term of operation of such Project document archive. Further, each party remains solely responsible for its own post-Project back-up and archive of Project documents after the term of the Contract, or after termination of the Project document archive, if one is established, for as long as required by the Contract and as each party deems necessary for its own purposes.

f. If a receiving party receives an obviously corrupted, damaged, or unreadable Electronic Document, the receiving party will advise the sending party of the incomplete transmission.

g. The parties will bring any non-conforming Electronic Documents into compliance with the EDP. The parties will attempt to complete a successful transmission of

Copyright© 2018 National Society of Professional Engineers, American Council of Engineering Companies, and American Society of Civil Engineers. All rights reserved.

the Electronic Document or use an alternative delivery method to complete the communication.

C. *Software Requirements for Electronic Document Exchange; Limitations*

1. Each party will acquire the software and software licenses necessary to create and transmit Electronic Documents and to read and to use any Electronic Documents received from the other party (and if relevant from third parties), using the software formats required in this section of the EDP.

a. Prior to using any updated version of the software required in this section for sending Electronic Documents to the other party, the originating party will first notify and receive concurrence from the other party for use of the updated version or adjust its transmission to comply with this EDP.

2. The parties agree not to intentionally edit, reverse engineer, decrypt, remove security or encryption features, or convert to another format for modification purposes any Electronic Document or information contained therein that was transmitted in a software data format, including Portable Document Format (PDF), intended by sender not to be modified, unless the receiving party obtains the permission of the sending party or is citing or quoting excerpts of the Electronic Document for Project purposes.

3. Software and data formats for exchange of Electronic Documents will conform to the requirements set forth in Exhibit A to this EDP, including software versions, if listed.

SC-2.06 Supplement Paragraph 2.06 of the General Conditions by adding the following paragraph:

D. *Requests by Contractor for Electronic Documents in Other Formats*

1. Release of any Electronic Document versions of the Project documents in formats other than those identified in the Electronic Documents Protocol (if any) or elsewhere in the Contract will be at the sole discretion of the Owner.

2. To extent determined by Owner, in its sole discretion, to be prudent and necessary, release of Electronic Documents versions of Project documents and other Project information requested by Contractor ("Request") in formats other than those identified in the Electronic Documents Protocol (if any) or elsewhere in the Contract will be subject to the provisions of the Owner's response to the Request, and to the following conditions to which Contractor agrees:

a. The content included in the Electronic Documents created by Engineer and covered by the Request was prepared by Engineer as an internal working document for Engineer's purposes solely, and is being provided to Contractor on an "AS IS" basis without any warranties of any kind, including, but not limited to any implied warranties of fitness for any purpose. As such, Contractor is advised and acknowledges that the content may not be suitable for Contractor's application, or may require substantial modification and independent verification by Contractor. The content may include limited resolution of models, not-to-scale schematic representations and symbols, use of notes to convey design concepts in lieu of accurate graphics, approximations, graphical simplifications, undocumented intermediate revisions, and other devices that may affect subsequent reuse.

Copyright© 2018 National Society of Professional Engineers, American Council of Engineering Companies, and American Society of Civil Engineers. All rights reserved.

b. Electronic Documents containing text, graphics, metadata, or other types of data that are provided by Engineer to Contractor under the request are only for convenience of Contractor. Any conclusion or information obtained or derived from such data will be at the Contractor's sole risk and the Contractor waives any claims against Engineer or Owner arising from use of data in Electronic Documents covered by the Request.

c. Contractor shall indemnify and hold harmless Owner and Engineer and their subconsultants from all claims, damages, losses, and expenses, including attorneys' fees and defense costs arising out of or resulting from Contractor's use, adaptation, or distribution of any Electronic Documents provided under the Request.

d. Contractor agrees not to sell, copy, transfer, forward, give away or otherwise distribute this information (in source or modified file format) to any third party without the direct written authorization of Engineer, unless such distribution is specifically identified in the Request and is limited to Contractor's subcontractors. Contractor warrants that subsequent use by Contractor's subcontractors complies with all terms of the Contract Documents and Owner's response to Request.

3. In the event that Owner elects to provide or directs the Engineer to provide to Contractor any Contractor-requested Electronic Document versions of Project information that is not explicitly identified in the Contract Documents as being available to Contractor, the Owner shall be reimbursed by Contractor on an hourly basis (at $155 per hour) for any engineering costs necessary to create or otherwise prepare the data in a manner deemed appropriate by Engineer.

2.07 Electronic Data

A. Copies of data furnished by Owner or Engineer to Contractor or Contractor to Owner or Engineer that may be relied upon are limited to the printed copies (also known as hard copies). Files in electronic media format of text, data, graphics, or other types are furnished only for the convenience of the receiving party. Any conclusion or information obtained or derived from such electronic files will be at the user's sole risk. If there is a discrepancy between the electronic files and the hard copies, the hard copies govern.

B. Because data stored in electronic media format can deteriorate or be modified inadvertently or otherwise without authorization of the data's creator, the party receiving electronic files agrees that it will perform acceptance tests or procedures within 60 days, after which the receiving party shall be deemed to have accepted the data thus transferred. Any errors detected within the 60-day acceptance period will be corrected by the transferring party.

C. When transferring documents in electronic media format, the transferring party makes no representations as to long term compatibility, usability, or readability of documents resulting from the use of software application packages, operating systems, or computer hardware differing from those used by the data's creator.

ARTICLE 3—CONTRACT DOCUMENTS: INTENT, REQUIREMENTS, REUSE

3.01 *Intent*

Copyright© 2018 National Society of Professional Engineers, American Council of Engineering Companies, and American Society of Civil Engineers. All rights reserved.

SC-3.01 Delete Paragraph 3.01.C in its entirety.

ARTICLE 4—COMMENCEMENT AND PROGRESS OF THE WORK

4.01 *Commencement of Contract Times; Notice to Proceed*

SC-4.01 DELETE Paragraph 4.01 of the General Conditions in its entirety and insert the following in its place:

A. The Contract Times will commence to run on the day indicated in the Notice to Proceed. A Notice to Proceed may be given at any time within thirty days after the Effective Date of the Agreement. In no event will the Contract Time commence to run later than the thirtieth day after the Effective Date of the Agreement.

4.05 *Delays in Contractor's Progress*

SC-4.05 Amend Paragraph 4.05.C by adding the following subparagraphs:

5. *Weather-Related Delays*

a. If "abnormal weather conditions" as set forth in Paragraph 4.05.C.2 of the General Conditions are the basis for a request for an equitable adjustment in the Contract Times, such request must be documented by data substantiating each of the following: 1) that weather conditions were abnormal for the period of time in which the delay occurred, 2) that such weather conditions could not have been reasonably anticipated, and 3) that such weather conditions had an adverse effect on the Work as scheduled.

ARTICLE 5—SITE, SUBSURFACE AND PHYSICAL CONDITIONS, HAZARDOUS ENVIRONMENTAL CONDITIONS

5.03 *Subsurface and Physical Conditions*

SC-5.03 Add the following new paragraphs immediately after Paragraph 5.03.D:

E. The following table lists the reports of explorations and tests of subsurface conditions at or adjacent to the Site that contain Technical Data, and specifically identifies the Technical Data in the report upon which Contractor may rely:

Report Title	Date of Report	Technical Data
1.5 MILLION GALLON WATER TANK	1/29/2025	Geotechnical Investigation

Copyright© 2018 National Society of Professional Engineers, American Council of Engineering Companies, and American Society of Civil Engineers. All rights reserved.

F. The following table lists the drawings of existing physical conditions at or adjacent to the Site, including those drawings depicting existing surface or subsurface structures at or adjacent to the Site (except Underground Facilities), that contain Technical Data, and specifically identifies the Technical Data upon which Contractor may rely:

Drawings Title	Date of Drawings	Technical Data
None		

G. Contractor may examine copies of reports and drawings identified in SC-5.03.E and SC-5.03.F that were not included with the Bidding Documents at **Egis BLN USA, Inc., 8320 Craig Street, Indianapolis, IN 46250** during regular business hours, or may request copies from Engineer.

5.06 *Hazardous Environmental Conditions*

SC-5.06 Add the following new paragraphs immediately after Paragraph 5.06.A.3:

4. The following table lists the reports known to Owner relating to Hazardous Environmental Conditions at or adjacent to the Site, and the Technical Data (if any) upon which Contractor may rely:

Report Title	Date of Report	Technical Data
None		

5. The following table lists the drawings known to Owner relating to Hazardous Environmental Conditions at or adjacent to the Site, and Technical Data (if any) contained in such Drawings upon which Contractor may rely:

Drawings Title	Date of Drawings	Technical Data
None		

ARTICLE 6—BONDS AND INSURANCE

6.01 *Performance, Payment, and Other Bonds*

SC-6.01 Add the following paragraphs immediately after Paragraph 6.01.A:

1. *Required Performance Bond Form:* The performance bond that Contractor furnishes will be in the form of EJCDC® C-610, Performance Bond (2018 edition). Performance Bonds shall remain in effect for a period of three (3) years following Final Payment.

2. *Required Payment Bond Form:* The payment bond that Contractor furnishes will be in the form of EJCDC® C-615, Payment Bond (2018 edition). Payment Bonds shall remain in effect for a period of one (1) year following Final Payment.

Copyright© 2018 National Society of Professional Engineers, American Council of Engineering Companies, and American Society of Civil Engineers. All rights reserved.

SC-6.01 Add the following paragraphs immediately after Paragraph 6.01.B:

1. The correction period specified as one year after the date of Substantial Completion in Paragraph 15.08.A of the General Conditions is hereby revised to be **2** years after Substantial Completion.

2. The warranty bond must be issued by the same surety that issues the performance bond required under Paragraph 6.01.A of the General Conditions.

6.03 *Contractor's Insurance*

SC-6.03 Supplement Paragraph 6.03 with the following provisions after Paragraph 6.03.C:

D. *Other Additional Insureds:* As a supplement to the provisions of Paragraph 6.03.C of the General Conditions, the commercial general liability, automobile liability, umbrella or excess liability policies must include as additional insureds (in addition to Owner and Engineer) the following:

Owner

Engineer

E. *Workers' Compensation and Employer's Liability:* Contractor shall purchase and maintain workers' compensation and employer's liability insurance, including, as applicable, United States Longshoreman and Harbor Workers' Compensation Act, Jones Act, stop-gap employer's liability coverage for monopolistic states, and foreign voluntary workers' compensation (from available sources, notwithstanding the jurisdictional requirement of Paragraph 6.02.B of the General Conditions).

Workers' Compensation and Related Policies	Policy limits of not less than:
Workers' Compensation	
State	Statutory
Applicable Federal (e.g., Longshoreman's)	Statutory
Foreign voluntary workers' compensation (employer's responsibility coverage), if applicable	Statutory
Jones Act (if applicable)	
Bodily injury by accident—each accident	$ NA
Bodily injury by disease—aggregate	$ NA
Employer's Liability	
Each accident	$1,000,000
Each employee	$1,000,000
Policy limit	$2,000,000

F. *Commercial General Liability—Claims Covered:* Contractor shall purchase and maintain commercial general liability insurance, covering all operations by or on behalf of Contractor, on an occurrence basis, against claims for:

1. damages because of bodily injury, sickness or disease, or death of any person other than Contractor's employees,

2. damages insured by reasonably available personal injury liability coverage, and

Copyright© 2018 National Society of Professional Engineers, American Council of Engineering Companies, and American Society of Civil Engineers. All rights reserved.

3. damages because of injury to or destruction of tangible property wherever located, including loss of use resulting therefrom.

G. *Commercial General Liability—Form and Content:* Contractor's commercial liability policy must be written on a 1996 (or later) Insurance Services Organization, Inc. (ISO) commercial general liability form (occurrence form) and include the following coverages and endorsements:

1. Products and completed operations coverage.

a. Such insurance must be maintained for three years after final payment.

b. Contractor shall furnish Owner and each other additional insured (as identified in the Supplementary Conditions or elsewhere in the Contract) evidence of continuation of such insurance at final payment and three years thereafter.

2. Blanket contractual liability coverage, including but not limited to coverage of Contractor's contractual indemnity obligations in Paragraph 7.18.

3. Severability of interests and no insured-versus-insured or cross-liability exclusions.

4. Underground, explosion, and collapse coverage.

5. Personal injury coverage.

6. Additional insured endorsements that include both ongoing operations and products and completed operations coverage through ISO Endorsements CG 20 10 10 01 and CG 20 37 10 01 (together). If Contractor demonstrates to Owner that the specified ISO endorsements are not commercially available, then Contractor may satisfy this requirement by providing equivalent endorsements.

7. For design professional additional insureds, ISO Endorsement CG 20 32 07 04 "Additional Insured—Engineers, Architects or Surveyors Not Engaged by the Named Insured" or its equivalent.

H. *Commercial General Liability—Excluded Content:* The commercial general liability insurance policy, including its coverages, endorsements, and incorporated provisions, must not include any of the following:

1. Any modification of the standard definition of "insured contract" (except to delete the railroad protective liability exclusion if Contractor is required to indemnify a railroad or others with respect to Work within 50 feet of railroad property).

2. Any exclusion for water intrusion or water damage.

3. Any provisions resulting in the erosion of insurance limits by defense costs other than those already incorporated in ISO form CG 00 01.

4. Any exclusion of coverage relating to earth subsidence or movement.

5. Any exclusion for the insured's vicarious liability, strict liability, or statutory liability (other than worker's compensation).

6. Any limitation or exclusion based on the nature of Contractor's work.

7. Any professional liability exclusion broader in effect than the most recent edition of ISO form CG 22 79.

Copyright© 2018 National Society of Professional Engineers, American Council of Engineering Companies, and American Society of Civil Engineers. All rights reserved.

I. *Commercial General Liability—Minimum Policy Limits*

Commercial General Liability	Policy limits of not less than:
General Aggregate	$2,000,000
Products—Completed Operations Aggregate	$1,000,000
Personal and Advertising Injury	$1,000,000
Bodily Injury and Property Damage—Each Occurrence	$1,000,000

J. *Automobile Liability:* Contractor shall purchase and maintain automobile liability insurance for damages because of bodily injury or death of any person or property damage arising out of the ownership, maintenance, or use of any motor vehicle. The automobile liability policy must be written on an occurrence basis.

Automobile Liability	Policy limits of not less than:
Combined Single Limit	
Combined Single Limit (Bodily Injury and Property Damage)	$2,000,000

K. *Umbrella or Excess Liability:* Contractor shall purchase and maintain umbrella or excess liability insurance written over the underlying employer's liability, commercial general liability, and automobile liability insurance described in the Paragraphs above. The coverage afforded must be at least as broad as that of each and every one of the underlying policies.

Excess or Umbrella Liability	Policy limits of not less than:
Each Occurrence	$5,000,000
General Aggregate	$5,000,000

L. *Using Umbrella or Excess Liability Insurance to Meet CGL and Other Policy Limit Requirements:* Contractor may meet the policy limits specified for employer's liability, commercial general liability, and automobile liability through the primary policies alone, or through combinations of the primary insurance policy's policy limits and partial attribution of the policy limits of an umbrella or excess liability policy that is at least as broad in coverage as that of the underlying policy, as specified herein. If such umbrella or excess liability policy was required under this Contract, at a specified minimum policy limit, such umbrella or excess policy must retain a minimum limit of $5,000,000 after accounting for partial attribution of its limits to underlying policies, as allowed above.

6.04 *Builder's Risk and Other Property Insurance*

SC-6.04 Supplement Paragraph 6.04 of the General Conditions with the following provisions:

F. *Builder's Risk Requirements:* The builder's risk insurance must:

1. be written on a builder's risk "all risk" policy form that at a minimum includes insurance for physical loss or damage to the Work, temporary buildings, falsework, and materials and equipment stored and in transit, and must not exclude the coverage of the following risks: fire; windstorm; hail; flood; earthquake, volcanic activity, and

Copyright© 2018 National Society of Professional Engineers, American Council of Engineering Companies, and American Society of Civil Engineers. All rights reserved.

other earth movement; lightning; riot; civil commotion; terrorism; vehicle impact; aircraft; smoke; theft; vandalism and malicious mischief; mechanical breakdown, boiler explosion, and artificially generated electric current; collapse; explosion; debris removal; demolition occasioned by enforcement of Laws and Regulations; and water damage (other than that caused by flood).

a. Such policy will include an exception that results in coverage for ensuing losses from physical damage or loss with respect to any defective workmanship, methods, design, or materials exclusions.

b. If insurance against mechanical breakdown, boiler explosion, and artificially generated electric current; earthquake, volcanic activity, and other earth movement; or flood, are not commercially available under builder's risk policies, by endorsement or otherwise, such insurance will be provided through other insurance policies acceptable to Owner and Contractor.

2. cover, as insured property, at least the following: (a) the Work and all materials, supplies, machinery, apparatus, equipment, fixtures, and other property of a similar nature that are to be incorporated into or used in the preparation, fabrication, construction, erection, or completion of the Work, including Owner-furnished or assigned property; (b) spare parts inventory required within the scope of the Contract; and (c) temporary works which are not intended to form part of the permanent constructed Work but which are intended to provide working access to the Site, or to the Work under construction, or which are intended to provide temporary support for the Work under construction, including scaffolding, form work, fences, shoring, falsework, and temporary structures.

3. cover expenses incurred in the repair or replacement of any insured property (including but not limited to fees and charges of contractors, engineers, and architects).

4. extend to cover damage or loss to insured property while in temporary storage at the Site or in a storage location outside the Site (but not including property stored at the premises of a manufacturer or Supplier).

5. extend to cover damage or loss to insured property while in transit.

6. allow for the waiver of the insurer's subrogation rights, as set forth in this Contract.

7. allow for partial occupancy or use by Owner by endorsement, and without cancellation or lapse of coverage.

8. include performance/hot testing and start-up, if applicable.

9. be maintained in effect until the Work is complete, as set forth in Paragraph 15.06.D of the General Conditions, or until written confirmation of Owner's procurement of property insurance following Substantial Completion, whichever occurs first.

10. include as named insureds the Owner, Contractor, Subcontractors (of every tier), and any other individuals or entities required by this Contract to be insured under such builder's risk policy. For purposes of Paragraphs 6.04, 6.05, and 6.06 of the General Conditions, and this and all other corresponding Supplementary Conditions, the parties required to be insured will be referred to collectively as "insureds." In addition

Copyright© 2018 National Society of Professional Engineers, American Council of Engineering Companies, and American Society of Civil Engineers. All rights reserved.

to Owner, Contractor, and Subcontractors of every tier, include as insureds the following:

a. Egis BLN USA, Inc.

b. CTL Engineers

c. Sims Durkin Associates

11. include, in addition to the Contract Price amount, the value of the following equipment and materials to be installed by the Contractor but furnished by the Owner or third parties:

a. No material will be provided by the Owner.

SC-6.04 Supplement Paragraph 6.04 of the General Conditions with the following provisions:

H. *Builder's Risk and Other Property Insurance Deductibles:* The purchaser of any required builder's risk, installation floater, or other property insurance will be responsible for costs not covered because of the application of a policy deductible.

1. The builder's risk policy (or if applicable the installation floater) will be subject to a deductible amount to be determined by the purchasing party responsible for paying the deductible for direct physical loss in any one occurrence.

SC-6.04 Delete Paragraph 6.04.A of the General Conditions and substitute the following in its place:

A. *Installation Floater*

1. Contractor shall provide and maintain installation floater insurance on a broad form or "all risk" policy providing coverage for materials, supplies, machinery, fixtures, and equipment that will be incorporated into the Work ("Covered Property"). Coverage under the Contractor's installation floater will include loss from covered "all risk" causes (perils) to Covered Property:

a. of the Contractor, and Covered Property of others that is in Contractor's care, custody, and control;

b. while in transit to the Site, including while at temporary storage sites;

c. while at the Site awaiting and during installation, erection, and testing;

d. continuing at least until the installation or erection of the Covered Property is completed, and the Work into which it is incorporated is accepted by Owner.

2. The installation floater coverage cannot be contingent on an external cause or risk, or limited to property for which the Contractor is legally liable.

3. The installation floater coverage will be in an amount sufficient to protect Contractor's interest in the Covered Property. The Contractor will be solely responsible for any deductible carried under this coverage.

4. This policy will include a waiver of subrogation applicable to Owner, Contractor, Engineer, all Subcontractors, and the officers, directors, partners, employees, agents and other consultants and subcontractors of any of them.

6.07 *Licensed Sureties and Insurers*

Copyright© 2018 National Society of Professional Engineers, American Council of Engineering Companies, and American Society of Civil Engineers. All rights reserved.

A. All bonds and insurance required by the Contract Documents to be purchased and maintained by Owner or Contractor shall be obtained from surety or insurance companies that are duly licensed or authorized in the jurisdiction in which the Project is located to issue bonds or insurance policies for the limits and coverages so required. Such surety and insurance companies shall also meet such additional requirements and qualifications as may be provided in the Supplementary Conditions.

6.08 *Certificates of Insurance*

A. Contractor shall deliver to Owner, with copies to each additional insured identified in the Supplementary Conditions, certificates of insurance (and other evidence of insurance requested by Owner or any other additional insured) which Contractor is required to purchase and maintain.

B. Owner shall deliver to Contractor, with copies to each additional insured identified in the Supplementary Conditions, certificates of insurance (and other evidence of insurance requested by Contractor or any other additional insured) which Owner is required to purchase and maintain.

6.09 *Owner's Liability Insurance*

A. In addition to the insurance required to be provided by Contractor under Paragraph 6.03, Owner, at Owner's option, may purchase and maintain at Owner's expense Owner's own liability insurance as will protect Owner against claims which may arise from operations under the Contract Documents.

6.10 *Waiver of Rights*

A. Owner and Contractor intend that all policies purchased in accordance with Paragraph 6.04 will protect Owner, Contractor, Subcontractors, and Engineer, and all other individuals or entities identified in the Supplementary Conditions to be listed as insureds or additional insureds (and the officers, directors, partners, employees, agents, consultants and subcontractors of each and any of them) in such policies and will provide primary coverage for all losses and damages caused by the perils or causes of loss covered thereby. All such policies shall contain provisions to the effect that in the event of payment of any loss or damage the insurers will have no rights of recovery against any of the insureds or additional insureds thereunder. Owner and Contractor waive all rights against each other and their respective officers, directors, partners, employees, agents, consultants and subcontractors of each and any of them for all losses and damages caused by, arising out of or resulting from any of the perils or causes of loss covered by such policies and any other property insurance applicable to the Work; and, in addition, waive all such rights against Subcontractors, and Engineer, and all other individuals or entities identified in the Supplementary Conditions to be listed as insured or additional insured (and the officers, directors, partners, employees, agents, consultants and subcontractors of each and any of them) under such policies for losses and damages so caused. None of the above waivers shall extend to the rights that any party making such waiver may have the proceeds of insurance held by Owner as trustee or otherwise payable under any policy so issued.

B. Owner waives all rights against Contractor, Subcontractors, and Engineer, and the officers, directors, partners, employees, agents, consultants and subcontractors of each and any of them for:

Copyright© 2018 National Society of Professional Engineers, American Council of Engineering Companies, and American Society of Civil Engineers. All rights reserved.

1. loss due to business interruption, loss of use, or other consequential loss extending beyond direct physical loss or damage to Owner's property or the Work caused by, arising out of, or resulting from fire or other perils whether or not insured by Owner; and

2. loss or damage to the completed Project or part thereof caused by, arising out of, or resulting from fire or other insured peril or cause of loss covered by any property insurance maintained on the completed Project or part thereof by Owner during partial utilization pursuant to Paragraph 15.04, after Substantial Completion pursuant to Paragraph 15.03, or after final payment pursuant to Paragraph 15.06.

C. Any insurance policy maintained by Owner covering any loss, damage or consequential loss referred to in Paragraph 5.07.B shall contain provisions to the effect that in the event of payment of any such loss, damage, or consequential loss, the insurers will have no rights of recovery against Contractor, Subcontractors, or Engineer, and the officers, directors, partners, employees, agents, consultants and subcontractors of each and any of them.

6.11 *Acceptance of Bonds and Insurance; Option to Replace*

A. If either Owner or Contractor has any objection to the coverage afforded by or other provisions of the bonds or insurance required to be purchased and maintained by the other party in accordance with Article 6 on the basis of non-conformance with the Contract Documents, the objecting party shall so notify the other party in writing within 10 days after receipt of the certificates (or other evidence requested) required by Paragraph 2.01.B. Owner and Contractor shall each provide to the other such additional information in respect of insurance provided as the other may reasonably request. If either party does not purchase or maintain all of the bonds and insurance required of such party by the Contract Documents, such party shall notify the other party in writing of such failure to purchase prior to the start of the Work, or of such failure to maintain prior to any change in the required coverage. Without prejudice to any other right or remedy, the other party may elect to obtain equivalent bonds or insurance to protect such other party's interests at the expense of the party who was required to provide such coverage, and a Change Order shall be issued to adjust the Contract Price accordingly.

6.12 *Partial Utilization, Acknowledgment of Property Insurer*

A. If Owner finds it necessary to occupy or use a portion or portions of the Work prior to Substantial Completion of all the Work as provided in Paragraph 15.04, no such use or occupancy shall commence before the insurers providing the property insurance pursuant to Paragraph 6.04 have acknowledged notice thereof and in writing effected any changes in coverage necessitated thereby. The insurers providing the property insurance shall consent by endorsement on the policy or policies, but the property insurance shall not be canceled or permitted to lapse on account of any such partial use or occupancy.

ARTICLE 7—CONTRACTOR'S RESPONSIBILITIES

7.03 *Labor; Working Hours*

SC-7.03 Add the following new subparagraphs immediately after Paragraph 7.03.C:

1. Regular working hours will be between 7:00 am and 7:00 pm.

Copyright© 2018 National Society of Professional Engineers, American Council of Engineering Companies, and American Society of Civil Engineers. All rights reserved.

2. Owner's legal holidays are New Years Day, Martin Luther King Jr. Day, Memorial Day, Independence Day, Labor Day, Columbus Day, Veterans Day, Thanksgiving, Lincoln's Birthday, Washington's Birthday, and Christmas Day.

SC-7.03 Add the following new paragraph immediately after Paragraph 7.03.C:

D. **Contractor shall** be responsible for the cost of any overtime pay or other expense incurred by the Owner for Engineer's services (including those of the Resident Project Representative, if any), Owner's representative, and construction observation services, occasioned by the performance of Work on Saturday, Sunday, any legal holiday, or as overtime on any regular workday. If Contractor is responsible but does not pay, or if the parties are unable to agree as to the amount owed, then Owner may impose a reasonable set-off against payments due under Article 15.

SC-7.03 Add the following new subparagraph immediately after Paragraph SC-7.03.D:

1. For purposes of administering the foregoing requirement, additional overtime costs are defined as any hour over 40 hours in a standard work week.

7.09 *Permits*

SC-7.09 Add the following new paragraph immediately after Paragraph 7.09.A:

B. **Contractor shall** be responsible for filling out all permit application paperwork and pay associated fees for the Construction Stormwater General Permit.

7.10 *Taxes*

SC-7.10 Add a new paragraph immediately after Paragraph 7.10.A:

B. Owner is exempt from payment of sales and compensating use taxes of the State of Indiana and of cities and counties thereof on all materials to be incorporated into the Work.

1. Owner will furnish the required certificates of tax exemption to Contractor for use in the purchase of supplies and materials to be incorporated into the Work.

2. Owner's exemption does not apply to construction tools, machinery, equipment, or other property purchased by or leased by Contractor, or to supplies or materials not incorporated into the Work.

7.20 *Continuing the Work*

A. Contractor shall carry on the Work and adhere to the Progress Schedule during all disputes or disagreements with Owner. No Work shall be delayed or postponed pending resolution of any disputes or disagreement, except as permitted by Paragraph 16.04 or as Owner and Contractor may otherwise agree in writing.

ARTICLE 8—OTHER WORK AT THE SITE

No Supplementary Conditions in this Article.

ARTICLE 9—OWNER'S RESPONSIBILITIES

No Supplementary Conditions in this Article.

Copyright© 2018 National Society of Professional Engineers, American Council of Engineering Companies, and American Society of Civil Engineers. All rights reserved.

ARTICLE 10—ENGINEER'S STATUS DURING CONSTRUCTION

10.03 *Resident Project Representative*

SC-10.03 Add the following new paragraphs immediately after Paragraph 10.03.B:

C. The Resident Project Representative (RPR) will be Engineer's representative at the Site. RPR's dealings in matters pertaining to the Work in general will be with Engineer and Contractor. RPR's dealings with Subcontractors will only be through or with the full knowledge or approval of Contractor. The RPR will:

1. *Conferences and Meetings:* Attend meetings with Contractor, such as preconstruction conferences, progress meetings, job conferences, and other Project-related meetings (but not including Contractor's safety meetings), and as appropriate prepare and circulate copies of minutes thereof.

2. *Safety Compliance:* Comply with Site safety programs, as they apply to RPR, and if required to do so by such safety programs, receive safety training specifically related to RPR's own personal safety while at the Site.

3. *Liaison*

    a. Serve as Engineer's liaison with Contractor. Working principally through Contractor's authorized representative or designee, assist in providing information regarding the provisions and intent of the Contract Documents.

    b. Assist Engineer in serving as Owner's liaison with Contractor when Contractor's operations affect Owner's on-Site operations.

    c. Assist in obtaining from Owner additional details or information, when required for Contractor's proper execution of the Work.

4. *Review of Work; Defective Work*

    a. Conduct on-Site observations of the Work to assist Engineer in determining, to the extent set forth in Paragraph 10.02, if the Work is in general proceeding in accordance with the Contract Documents.

    b. Observe whether any Work in place appears to be defective.

    c. Observe whether any Work in place should be uncovered for observation, or requires special testing, inspection or approval.

5. *Inspections and Tests*

    a. Observe Contractor-arranged inspections required by Laws and Regulations, including but not limited to those performed by public or other agencies having jurisdiction over the Work.

    b. Accompany visiting inspectors representing public or other agencies having jurisdiction over the Work.

6. *Payment Requests:* Review Applications for Payment with Contractor.

7. *Completion*

    a. Participate in Engineer's visits regarding Substantial Completion.

Copyright© 2018 National Society of Professional Engineers, American Council of Engineering Companies, and American Society of Civil Engineers. All rights reserved.

b. Assist in the preparation of a punch list of items to be completed or corrected.

c. Participate in Engineer's visit to the Site in the company of Owner and Contractor regarding completion of the Work, and prepare a final punch list of items to be completed or corrected by Contractor.

d. Observe whether items on the final punch list have been completed or corrected.

D. The RPR will not:

1. Authorize any deviation from the Contract Documents or substitution of materials or equipment (including "or-equal" items).

2. Exceed limitations of Engineer's authority as set forth in the Contract Documents.

3. Undertake any of the responsibilities of Contractor, Subcontractors, or Suppliers.

4. Advise on, issue directions relative to, or assume control over any aspect of the means, methods, techniques, sequences or procedures of construction.

5 Advise on, issue directions regarding, or assume control over security or safety practices, precautions, and programs in connection with the activities or operations of Owner or Contractor.

6. Participate in specialized field or laboratory tests or inspections conducted off-site by others except as specifically authorized by Engineer.

7. Authorize Owner to occupy the Project in whole or in part.

ARTICLE 11—CHANGES TO THE CONTRACT

11.08 *Change of Contract Times*

SC-11.08 Add the following new paragraphs immediately after Paragraph 11.08.B:

A. Where Contractor is prevented from completing any part of the Work within the Contract Times due to delay beyond the control of Contractor, the Contract Times will be extended in an amount equal to the time lost due to such delay if a Claim is made therefor as provided in Paragraph 11.08. Delays beyond the control of Contractor shall include, but not be limited to, acts or neglect by Owner, acts or neglect of utility owners or other contractors performing other work as contemplated by Article 8, fires, floods, epidemics, abnormal weather conditions, or acts of God.

B. No adjustment of Contract Time will be provided for delays in the work caused by flooding in a federally-designated floodway.

C. Owner, Engineer and the Related Entities of each of them shall not be liable to Contractor for any claims, costs, losses, or damages (including but not limited to all fees and charges of Engineers, architects, attorneys, and other professionals and all court or arbitration or other dispute resolution costs) sustained by Contractor on or in connection with any other project or anticipated project.

D. If, through no fault of Contractor, final completion of the Work is significantly delayed, and if Engineer so confirms, Owner shall, upon receipt of Contractor's final Application for Payment (for Work fully completed and accepted) and recommendation of Engineer, and without terminating the Contract, make payment of the balance due for that portion of the

Copyright© 2018 National Society of Professional Engineers, American Council of Engineering Companies, and American Society of Civil Engineers. All rights reserved.

Work fully completed and accepted. If the remaining balance to be held by Owner for Work not fully completed or corrected is less than the retainage stipulated in the Agreement, and if bonds have been furnished as required in Paragraph 6.01, the written consent of the surety to the payment of the balance due for that portion of the Work fully completed and accepted shall be submitted by Contractor to Engineer with the Application for such payment. Such payment shall be made under the terms and conditions governing final payment, except that it shall not constitute a waiver of Claims

ARTICLE 12—CLAIMS

12.01 *Claims*

SC-12.01 Add the following new paragraph immediately after Paragraph 12.01.G:

G. The party making the Claim shall be responsible for the costs incurred for Engineer's review and preparation of actions related to any Claim. Should Contractor make the Claim, Owner at its sole discretion shall be entitled to charge Contractor directly for such costs or offset such costs from any payment due Contractor.

ARTICLE 13—COST OF WORK; ALLOWANCES, UNIT PRICE WORK

13.01 *Cost of the Work*

SC-13.01.B.5.c Add the following new paragraph immediately after Paragraph 13.01.B.5.c:

4) Use of Contractor's and Subcontractor's Equipment. The value of such equipment ownership and use for the purposes of determining the value of any Work covered under 13.01.B.5.c shall not exceed the FHWA hourly rate listed in the current Rental Rate Blue Book published by *EquipmentWatch* for each hour of use in the Work. Equipment standby time will not be included in this value.

13.03 *Unit Price Work*

SC-13.03 Delete Paragraph 13.03.E in its entirety and insert the following in its place:

B. The estimated quantities of items of Unit Price Work are not guaranteed and are solely for the purpose of comparison of Bids and determining an initial Contract Price. Determinations of the actual quantities and classifications of Unit Price Work performed by Contractor will be made by Engineer subject to the provisions of Paragraph 10.05.

C. Each unit price will be deemed to include an amount considered by Contractor to be adequate to cover Contractor's overhead and profit for each separately identified item.

D. Owner or Contractor may make a Claim for an adjustment in the Contract Price in accordance with Paragraph 10.05 if:

1. the quantity of any item of Unit Price Work performed by Contractor differs materially and significantly from the estimated quantity of such item indicated in the Agreement; and

2. there is no corresponding adjustment with respect to any other item of Work; and

3. Contractor believes that Contractor is entitled to an increase in Contract Price as a result of having incurred additional expense or Owner believes that Owner is entitled

Copyright© 2018 National Society of Professional Engineers, American Council of Engineering Companies, and American Society of Civil Engineers. All rights reserved.

to a decrease in Contract Price and the parties are unable to agree as to the amount of any such increase or decrease.

E. *Adjustments in Unit Price*

1. Contractor or Owner shall be entitled to an adjustment in the unit price with respect to an item of Unit Price Work if:

a. the extended price of a particular item of Unit Price Work amounts to 5 percent or more of the Contract Price (based on estimated quantities at the time of Contract formation) and the variation in the quantity of that particular item of Unit Price Work actually furnished or performed by Contractor differs by more than 20 percent from the estimated quantity of such item indicated in the Agreement; and

b. Contractor's unit costs to perform the item of Unit Price Work have changed materially and significantly as a result of the quantity change.

2. The adjustment in unit price will account for and be coordinated with any related changes in quantities of other items of Work, and in Contractor's costs to perform such other Work, such that the resulting overall change in Contract Price is equitable to Owner and Contractor.

3. Adjusted unit prices will apply to all units of that item.

ARTICLE 14—TESTS AND INSPECTIONS; CORRECTION, REMOVAL, OR ACCCEPTANCE OF DEFECTIVE WORK

No Supplementary Conditions in this Article.

ARTICLE 15—PAYMENTS TO CONTRACTOR, SET OFFS; COMPLETIONS; CORRECTION PERIOD

15.01 *Schedule of Values*

A. The Schedule of Values established as provided in Paragraph 2.03.A.3 will serve as the basis for progress payments and will be incorporated into a form of Application for Payment acceptable to Engineer. Progress payments on account of Unit Price Work will be based on the number of units completed.

15.02 *Progress Payments*

15.03 *Substantial Completion*

SC-15.03 Add the following new subparagraph to Paragraph 15.03.B:

1. If some or all of the Work has been determined not to be at a point of Substantial Completion and will require re-inspection or re-testing by Engineer, the cost of such re-inspection or re-testing, including the cost of time, travel and living expenses, will be paid by Contractor to Owner. If Contractor does not pay, or the parties are unable to agree as to the amount owed, then Owner may impose a reasonable set-off against payments due under this Article 15.

Copyright© 2018 National Society of Professional Engineers, American Council of Engineering Companies, and American Society of Civil Engineers. All rights reserved.

15.08 *Correction Period*

SC-15.08 Add the following new Paragraph 15.08.G:

G. The correction period specified as one year after the date of Substantial Completion in Paragraph 15.08.A of the General Conditions is hereby revised to be the number of years set forth in SC-6.01.A.1; or if no such revision has been made in SC-6.01.A, then the correction period is hereby specified to be **2** years after Substantial Completion.

ARTICLE 16—SUSPENSION OF WORK AND TERMINATION

No Supplementary Conditions in this Article.

ARTICLE 17—FINAL RESOLUTIONS OF DISPUTES

17.02 *Arbitration*

SC-17.02 Add the following new paragraph immediately after Paragraph 17.01.

17.02 *Arbitration*

A. All matters subject to final resolution under this Article will be settled by arbitration administered by the American Arbitration Association in accordance with its Construction Industry Arbitration Rules (subject to the conditions and limitations of this Paragraph SC-17.02). Any controversy or claim in the amount of $100,000 or less will be settled in accordance with the American Arbitration Association's supplemental rules for Fixed Time and Cost Construction Arbitration. This agreement to arbitrate will be specifically enforceable under the prevailing law of any court having jurisdiction.

B. The demand for arbitration will be filed in writing with the other party to the Contract and with the selected arbitration administrator, and a copy will be sent to Engineer for information. The demand for arbitration will be made within the specific time required in Article 17, or if no specified time is applicable within a reasonable time after the matter in question has arisen, and in no event will any such demand be made after the date when institution of legal or equitable proceedings based on such matter in question would be barred by the applicable statute of limitations.

C. The arbitrator(s) must be licensed engineers, contractors, attorneys, or construction managers. Hearings will take place pursuant to the standard procedures of the Construction Arbitration Rules that contemplate in-person hearings. The arbitrators will have no authority to award punitive or other damages not measured by the prevailing party's actual damages, except as may be required by statute or the Contract. Any award in an arbitration initiated under this clause will be limited to monetary damages and include no injunction or direction to any party other than the direction to pay a monetary amount.

D. The Arbitrators will have the authority to allocate the costs of the arbitration process among the parties, but will only have the authority to allocate attorneys' fees if a specific Law or Regulation or this Contract permits them to do so.

E. The award of the arbitrators must be accompanied by a reasoned written opinion and a concise breakdown of the award. The written opinion will cite the Contract provisions deemed applicable and relied on in making the award.

Copyright© 2018 National Society of Professional Engineers, American Council of Engineering Companies, and American Society of Civil Engineers. All rights reserved.

F. The parties agree that failure or refusal of a party to pay its required share of the deposits for arbitrator compensation or administrative charges will constitute a waiver by that party to present evidence or cross-examine witness. In such event, the other party shall be required to present evidence and legal argument as the arbitrator(s) may require for the making of an award. Such waiver will not allow for a default judgment against the non-paying party in the absence of evidence presented as provided for above.

G. No arbitration arising out of or relating to the Contract will include by consolidation, joinder, or in any other manner any other individual or entity (including Engineer, and Engineer's consultants and the officers, directors, partners, agents, employees or consultants of any of them) who is not a party to this Contract unless:

1. the inclusion of such other individual or entity will allow complete relief to be afforded among those who are already parties to the arbitration;

2. such other individual or entity is substantially involved in a question of law or fact which is common to those who are already parties to the arbitration, and which will arise in such proceedings;

3. such other individual or entity is subject to arbitration under a contract with either Owner or Contractor, or consents to being joined in the arbitration; and

4. the consolidation or joinder is in compliance with the arbitration administrator's procedural rules.

H. The award will be final. Judgment may be entered upon it in any court having jurisdiction thereof, and it will not be subject to modification or appeal, subject to provisions of the Laws and Regulations relating to vacating or modifying an arbitral award.

I. Except as may be required by Laws or Regulations, neither party nor an arbitrator may disclose the existence, content, or results of any arbitration hereunder without the prior written consent of both parties, with the exception of any disclosure required by Laws and Regulations or the Contract. To the extent any disclosure is allowed pursuant to the exception, the disclosure must be strictly and narrowly limited to maintain confidentiality to the extent possible.

17.03 *Attorneys' Fees*

SC-17.03 Add the following new paragraph immediately after Paragraph 17.02.

17.03 *Attorneys' Fees*

A. For any matter subject to final resolution under this Article, the prevailing party shall be entitled to an award of its attorneys' fees incurred in the final resolution proceedings, in an equitable amount to be determined in the discretion of the court, arbitrator, arbitration panel, or other arbiter of the matter subject to final resolution, taking into account the parties' initial demand or defense positions in comparison with the final result.

ARTICLE 18—MISCELLANEOUS

No Supplementary Conditions in this Article.

Copyright© 2018 National Society of Professional Engineers, American Council of Engineering Companies, and American Society of Civil Engineers. All rights reserved.

EXHIBIT A—SOFTWARE REQUIREMENTS FOR ELECTRONIC DOCUMENT EXCHANGE

Item	Electronic Documents	Transmittal Means	Data Format	Note (1)
a.1	General communications, transmittal covers, meeting notices and responses to general information requests for which there is no specific prescribed form.	Email	Email	
a.2	Meeting agendas, meeting minutes, RFI's and responses to RFI's, and Contract forms.	Email w/ Attachment	PDF	(2)
a.3	Contactors Submittals (Shop Drawings, "or equal" requests, substitution requests, documentation accompanying Sample submittals and other submittals) to Owner and Engineer, and Owner's and Engineer's responses to Contractor's Submittals, Shop Drawings, correspondence, and Applications for Payment.	Email w/ Attachment	PDF	
a.4	Correspondence; milestone and final version Submittals of reports, layouts, Drawings, maps, calculations and spreadsheets, Specifications, Drawings and other Submittals from Contractor to Owner or Engineer and for responses from Engineer and Owner to Contractor regarding Submittals.	Email w/ Attachment or LFE	PDF	
a.5	Layouts and drawings to be submitted to Owner for future use and modification.	Email w/ Attachment or LFE	DWG	
a.6	Correspondence, reports and Specifications to be submitted to Owner for future word processing use and modification.	Email w/ Attachment or LFE	DOC	
a.7	Spreadsheets and data to be submitted to Owner for future data processing use and modification.	Email w/ Attachment or LFE	EXC	

Notes	
(1)	All exchanges and uses of transmitted data are subject to the appropriate provisions of Contract Documents.
(2)	Transmittal of written notices is governed by Paragraph 18.01 of the General Conditions.

Key	
Email	Standard Email formats (.htm, .rtf, or .txt). Do not use stationery formatting or other features that impair legibility of content on screen or in printed copies
LFE	Agreed upon Large File Exchange method (FTP, CD, DVD, hard drive)
PDF	Portable Document Format readable by Adobe® Acrobat Reader Version **2020.13** or later
DWG	Autodesk® AutoCAD .dwg format Version **2020**
DOC	Microsoft® Word .docx format Version **2011**
EXC	Microsoft® Excel .xlsx or .xml format Version **2011**

Copyright© 2018 National Society of Professional Engineers, American Council of Engineering Companies, and American Society of Civil Engineers. All rights reserved.

00831

E-Verify Affidavit

E-Verify Affidavit Directions

Enroll in and verify the work eligibility status of all newly hired employees through the E-Verify program as defined in IC 22-5-1.7-3. Execute and return the attached Affidavit of Employment Eligibility Verification with the executed Agreement and other related documentation.

Contractor is not required to verify the work eligibility status of all newly hired employees of the Contractor through the E-Verify program if the E-Verify program no longer exists.

E-Verify Affidavit

"The Contractor affirms under the penalties of perjury that he/she/it does not knowingly employ an unauthorized alien.

The Contractor shall enroll in and verify the work eligibility status of all his/her/its newly hired employees through the E-Verify program as defined in IC 22-5-1.7-3. The Contractor is not required to participate should the E-Verify program cease to exist. Additionally, the Contractor is not required to participate if the Contractor is self-employed and does not employ any employees.

The Contractor shall not knowingly employ or contract with an unauthorized alien. The Contractor shall not retain an employee or contract with a person that the Contractor subsequently learns is an unauthorized alien.

The Contractor shall require his/her/its subcontractors, who perform work under this contract, to certify to the Contractor that the subcontractor does not knowingly employ or contract with an unauthorized alien and that the subcontractor has enrolled and is participating in the E-Verify program. The Contractor agrees to maintain this certification throughout the duration of the term of a contract with a subcontractor.

The Owner may terminate the Contract for default if the Contractor fails to cure a breach of this provision no later than thirty (30) days after being notified by the "Owner."

_____
(Business Name)

By:_____
(Signature)

_____
(Printed)

_____
(Title)

STATE OF INDIANA)
) SS:
COUNTY OF _____)

Subscribed and sworn to before me, the undersigned notary public, on this ____ day of _____, 20__.

_____
(Notary Public - Signature)

SEAL

_____
(Notary Public - Printed)

My Commission Expires: _____.

Residing in _____ County.

00900

Addenda

DIVISION 1

GENERAL REQUIREMENTS

01001

General Administrative Requirements

SECTION 01001
GENERAL ADMINISTRATIVE REQUIREMENTS

PART 1 - GENERAL

1.1 SPECIFICATIONS, GENERAL

A. Division 0: Sections in Division 0, numbered to 00999, provide general Proposal and contracting requirements.

B. Division 1: Sections in Division 1, numbered 01000 to 01999, govern the execution of the Work of all Sections in the Specifications.

C. Divisions 2 through 16 (Technical Specifications), numbered 02000 to 16999, govern specific portions of the Work.

1.2 SUMMARY

A. This Section includes the following:

1. Work covered by the Contract Documents and General Limitations.
2. Contract Modification Procedures.
3. Payment Procedures.
4. Project Management and Coordination.
5. Construction Progress Documentation.
6. Photographic Documentation.
7. Submittal Procedures.
8. Quality Requirements.
9. Temporary Facilities and Controls.
10. Product Requirements.
11. Execution Requirements.

12. Cutting and Patching.

13. Closeout Procedures.

14. Record Documents.

15. Administrative Forms.

B. Related Sections include the following:

1. Section 01220 – Measurement and Payment for information about pay items.

1.3 WORK COVERED BY CONTRACT DOCUMENTS AND GENERAL LIMITATIONS

A. Work Covered by the Contract Documents

1. The Work is generally described in Section 00110 - Advertisement for Proposals or Request for Proposals and more fully described in the Contract Documents.

B. Use Of Premises

1. Use of Site: Do not disturb portions of Project site beyond areas in which the Work is indicated. Limit use of premises to:
    a. Areas within the Contract limits indicated, or where not indicated limit work to Site limits.
    b. Designated public rights-of-way, Owner-provided permanent and temporary easements, and noted areas outside of the Site limits or limits of Work indicated on Drawings.
    c. Additional temporary easements obtained by Contractor for the Work and accepted by Owner.
    d. Written permission of property owner and Owner for all other locations.
2. Contractor's use of premises is limited by:
    a. Owner's right to operate and maintain its utility works,
        1) Public use of existing rights-of-way.
        2) Conditions of easements utilized.
        3) Property rights of utilities occupying site.

4) Property rights of site owner(s), including but not limited to governmental agencies controlling rights-of-way and landowners.

b. Owner Occupancy: Allow for Owner occupancy of Project site and use by the public of public areas not immediately occupied by Contractor for the Work.

c. Driveways and Entrances: Keep driveways and entrances serving premises clear and available to Owner, Owner's employees, property owner and residents, and emergency vehicles at all times. Do not use these areas for parking or storage of materials.

C. Owner's Occupancy Requirements

1. Owner Occupancy of Completed Areas of Construction: Owner reserves the right to occupy and to place and install equipment in completed portions of the Work, before Substantial Completion, provided such occupancy does not interfere with completion of the Work. Such placement of equipment and partial occupancy shall not constitute acceptance of that portion or the total Work.

D. Work Restrictions

1. On-Site Work Hours: Work shall be generally performed during the hours of 7:00 a.m. to 7:00 p.m., Monday through Friday, except as otherwise indicated.

a. Weekend Hours:

1) Saturday: with approval from Town.
2) Sunday: with approval from Town.
3) Early Morning Hours: No early morning Work will be conducted without Owner's prior written authorization.
4) Hours for Utility Shutdowns: Limit utility shutdowns to 8:00 a.m. to 4:00 p.m. Monday through Thursday.
5) Hours for noisy activity: Limit noisy activities to weekdays from 8:00 a.m. to 5:00 p.m.
6) Nighttime Hours: No nighttime Work will be conducted without Owner's prior written authorization.

2. Existing Utility Interruptions: Do not interrupt utilities, including Owner's utilities, unless permitted under the following conditions

and then only after arranging to provide temporary utility services according to requirements indicated:

a. Coordinate all utility interruptions with utility owner.
b. Comply with all utility owner's requirements in the conduct of the utility interruption.
c. Do not proceed with utility interruptions without the utility owner's written permission.
d. Notify Engineer, Owner, and utility owner not less than two days in advance of proposed utility interruptions. Provide utility owner's written permission with notification.

3. Bypass Pumping

a. Bypass pumping may be required based on Contractor's means and methods, the progress of the Work, and a variety of other causes.

E. Level of Detail: The Contract Documents do not, in general, contain the following information necessary for completion of the Work and is incorporated by reference:

1. Items that are generally known in the construction industry to be necessary to the adequacy or function of the finished project.

2. Items generally known by craftsmen skilled in the trade to be necessary to the adequacy or function of the finished project.

3. Items that are mandatory by code, ordinance, or statute.

1.4 DEFINITIONS

A. The following definitions apply to the Contract Documents.

1. Action Submittals: Written and graphic information that requires Engineer's responsive action.

2. Certificates: Written certification on appropriate letterhead for welding, installers, manufacturers, products, or materials.

3. Cutting: Removal of in-place construction necessary to permit installation or performance of other Work.

4. Experienced: When used with an entity, "experienced" means having successfully completed a minimum of five previous projects similar in size and scope to this Project; being familiar with special requirements indicated; and having complied with requirements of authorities having jurisdiction.

5. Field Quality-Control Testing: Tests and inspections that are performed on-site for installation of the Work and for completed Work.

6. Informational Submittals: Written information that does not require Engineer's responsive action. Informational Submittals may be rejected for not complying with requirements.

7. Installer/Applicator/Erector: Contractor or another entity engaged by Contractor as an employee, Subcontractor, or Sub-subcontractor, to perform a particular construction operation, including installation, erection, application, and similar operations.

8. Patching: Fitting and repair work required to restore surfaces to original conditions after installation of other Work.

9. Permanent Enclosure: As determined by Engineer, permanent or temporary roofing is complete, insulated, and weathertight; exterior walls are insulated and weathertight; and all openings are closed with permanent construction or substantial temporary closures.

10. Portable Document Format (PDF): An open standard file format licensed by Adobe Systems used for representing documents in a device-independent and display resolution-independent fixed-layout document format. PDF Submittals shall have no security settings, shall be color, and shall be processed to recognize text using Optical Character Recognition (OCR).

11. Preconstruction Testing: Tests and inspections that are performed specifically for the Project before products and materials are incorporated into the Work to verify performance or compliance with specified criteria.

12. Product Data: Manufacturer’s standard published literature specific to a product.

13. Product Testing: Tests and inspections that are performed by a testing agency to establish product performance and compliance with industry standards.

14. Products: Items purchased for incorporation into the Work. The term "product" includes the terms "material," "equipment," "system," and terms of similar intent.

15. Qualification Data: Written information that demonstrates capabilities and experience of firm or person.

16. Quality-Assurance Services: Activities, actions, and procedures performed before and during execution of the Work to guard against defects and deficiencies and substantiate that proposed construction will comply with requirements.

17. Quality-Control Services: Tests, inspections, procedures, and related actions during and after execution of the Work to evaluate that actual products incorporated into the Work and completed construction comply with requirements.

18. Reports: Reports of material tests, product tests, research/evaluation, preconstruction tests, compatibility tests, field tests, maintenance data, design data, transition plans, manufacturer's instructions, manufacturer's field reports, insurance certificates, and bonds.

19. RFI (Request for Interpretation): Request from Contractor seeking interpretation or clarification of the Contract Documents.

20. Shop Drawing: Project-specific drawings or information, drawn accurately to scale.

21. Source Quality-Control Testing: Tests and inspections that are performed at the source, i.e., plant, mill, factory, pit, quarry, or shop.

22. Substitutions: Changes in products, materials, equipment, and methods of construction from those required by the Contract Documents and proposed by Contractor.

23. Testing Agency: A Nationally Recognized Testing Laboratory (NRTL), a testing agency accredited under the National Voluntary

Laboratory Accreditation Program (NVLAP), or a testing agency qualified to conduct product testing and acceptable to authorities having jurisdiction engaged to perform specific tests, inspections, or both. Testing laboratory shall mean the same as testing agency.

24. Tree Protection Zone: Area surrounding individual trees or groups of trees to remain during construction and defined by the drip line of individual trees or the perimeter drip line of groups of trees, unless otherwise indicated.

1.5 CONTRACT MODIFICATION PROCEDURES

A. Proposal Requests and Claims

1. Owner-Initiated Proposal Requests: Engineer will issue a detailed description of proposed changes in the Work that may require adjustment to the Contract Price or the Contract Time. If necessary, the description will include supplemental or revised Drawings and Specifications.
    a. Proposal requests issued by Engineer are for information only. Do not consider them instructions either to stop work in progress or to execute the proposed change.
    b. Within time specified, submit a quotation estimating cost adjustments to the Contract Price and the Contract Time necessary to execute the change.
        1) Include a list of quantities of products required or eliminated and unit costs, with total amount of purchases and credits to be made. If requested, furnish survey data to substantiate quantities.
        2) Indicate applicable delivery charges, equipment rental, and amounts of trade discounts.
        3) Include costs of labor and supervision directly attributable to the change.
        4) Include an updated Progress Schedule that indicates the effect of the change. Use available total float before requesting an extension of the Contract Time.

B. Contractor-Initiated Claims: If latent or unforeseen conditions require modifications to the Contract, Contractor may propose changes by submitting a Change Order Request to Engineer.

1. Include a statement outlining reasons for the change and the effect of the change on the Work. Provide a complete description of the proposed change. Indicate the effect of the proposed change on the Contract Price and the Contract Time.

2. Include a list of quantities of products required or eliminated, with total amount of purchases and credits to be made. If requested, furnish survey data to substantiate quantities.

3. Where unit costs are established, indicate changes to the Contract Price on the basis of those unit costs.

4. Where unit costs are not established, include detailed costs attributable solely to the proposed changes for:

   a. Payroll, by labor and supervision category.
   b. Materials and equipment furnished and incorporated into the Work, including trade discounts.
   c. Payments to Subcontractors and special consultants.
      1) Include Subcontractor's costs consistent with these cost details.
   d. Transportation, travel, and subsistence expenses.
   e. Consumables.
   f. Rental of construction equipment and machinery.
   g. Utilities, fuel and sanitary facilities.
   h. Minor expenses.
   i. Premiums for bonds and insurance.
   j. Ownership and use costs for Contractor's construction equipment and machinery.
   k. Other costs allowable under the Contract.

5. Include an updated Progress Schedule that indicates the effect of the change. Use available total float before requesting an extension of the Contract Time.

C. Work Change Directives

1. Work Change Directive: Engineer may issue a Work Change Directive. Work Change Directive instructs Contractor to proceed

with a change in the Work, for subsequent inclusion in a Change Order.

a. Work Change Directive contains a complete description of change in the Work. It also designates method to be followed to determine change in the Contract Price or the Contract Time.

2. Documentation: Maintain records on a time and material basis with information required for Contractor-Initiated Claims.

a. After completion of change, submit an itemized account and supporting data necessary to substantiate cost and time adjustments to the Contract.

1.6 PAYMENT PROCEDURES

A. Applications For Payment

1. Each Application for Payment shall be consistent with previous applications and payments as certified by Engineer and paid for by Owner.

a. Initial Application for Payment, Application for Payment at time of Substantial Completion, and final Application for Payment involve additional requirements.

2. Application Preparation: Execute by a person authorized to sign legal documents on behalf of Contractor.

3. Transmittal: Submit three (3) signed original copies of each Application for Payment with attachments by transmittal to Engineer.

4. Applications for Payment, General: Submit the following supporting documentation with Applications for Payment:

a. Stored Materials:

1) Bill of sale, invoice or other documentation warranting that Owner has received ownership of the materials and equipment free and clear of all Liens.

2) Evidence that the materials and equipment are covered by appropriate property insurance.

b. Erosion Control Measures: Inspection log and inspection reports covering the period from the prior Application for Payment to date of submission of the current Application for Payment.
c. Bonds: Performance and Payment Bonds reflecting the Contract Price revised by any Change Orders since the prior Application for Payment.
d. Insurance: Certificates of Insurance to replace Certificates of Insurance expiring within the subsequent 30 days.
e. Schedules: Revised Progress Schedule as required by Engineer when regular progress meetings are not being held.
f. Other documentation deemed necessary by Engineer to determine compliance with the Contract Documents.

5. Initial Application for Payment:

a. Approved submittals that must precede submittal of first Application for Payment include the following:
    1) Progress Schedule.
    2) Schedule of Values.
    3) Submittals Schedule.
    4) Pre-Construction Photographs and Video
b. Submittals that must precede or coincide with submittal of first Application for Payment include the following:
    1) Copies of Contractor-provided permits.
    2) Copies of authorizations and perpetual paid-up licenses from all entities requiring licensing for the use of products to be incorporated into the Work.

6. Application for Payment at Substantial Completion: After issuing the Certificate of Substantial Completion, submit an Application for Payment showing 100 percent completion for portion of the Work claimed as substantially complete.

a. Include documentation supporting claim that the Work is substantially complete and a statement showing an accounting of changes to the Contract Price.
b. Evidence of completion of Project closeout requirements.
c. Insurance certificates for products and completed operations where required and proof that taxes, fees, and similar obligations were paid.

d. Final meter readings for utilities, a measured record of stored fuel, and similar data as of date of Substantial Completion or when Owner took possession of and assumed responsibility for corresponding elements of the Work.
e. Affidavits of Release of Liens on a form acceptable to Engineer for all Subcontractors not providing Work after Substantial Completion.
f. Preliminary liquidated damages settlement statement for liquidated damages to substantial completion, where liquidated damages have been assessed. Settlement statement shall not include considerations of Claims in process.

7. Final Payment Application: Submit final Application for Payment with releases and supporting documentation not previously submitted and accepted, including, but not limited, to the following:
   a. Copy of Rule 5 Notice of Termination for erosion control measures.
   b. Updated final statement, accounting for final changes to the Contract Price.
   c. Contractor's Affidavit of Payment of Debts and Claims on a form acceptable to Engineer.
   d. Contractor's Affidavit of Release of Liens on a form acceptable to Engineer
   e. Consent of Surety to Final Payment on a form acceptable to Engineer'
   f. Evidence that claims have been settled.
   g. Post-construction photographs and video.
   h. Final liquidated damages settlement statement, where liquidated damages have been assessed.

1.7 PROJECT MANAGEMENT AND COORDINATION

A. Coordination

1. Coordination: Coordinate construction operations to ensure efficient and orderly installation of each part of the Work.

2. Administrative Procedures: Coordinate scheduling and timing of required administrative procedures with other construction

activities to avoid conflicts and to ensure orderly progress of the Work, including, but not limited to, the following:

a. Preparation and revision of the Progress Schedule.
b. Preparation of the Schedule of Values.
c. Revision of the Subcontractors List.
d. Revision of the Products List.
e. Installation and removal of temporary facilities and controls.
f. Delivery and processing of submittals.
g. Pre-Construction and Progress meetings.
h. Project closeout activities.
i. Startup and adjustment of systems.

3. Coordination of Observation with Engineer: Where Engineer is providing observation services, coordinate with Engineer to ensure that Engineer has adequate notice of Contractor's activities to schedule observation:

a. Notify Owner and Engineer at least 48 hours prior to the initiation and temporary cessation of Work at the Site.
1) Provide notification no later than 8:00 AM on the prior Thursday for initiation or temporary cessation of Work on the following Monday or Tuesday.
b. Provide a list to Engineer's representative daily prior to 1:30 PM of the next day's scheduled activities.
c. Do not proceed with Work until notification is made as provided above.

B. Project Meetings

1. General: Schedule and conduct preconstruction and progress meetings and conferences at Project site, unless otherwise indicated. Coordinate schedule to allow attendance by Engineer and Owner.

a. Minutes: Engineer will record and distribute meeting minutes.

C. Requests For Interpretation (RFIs)

1. Procedure: Immediately on discovery of the need for interpretation of the Contract Documents, and if not possible to request interpretation at Project meeting, prepare and submit an RFI.

a. RFIs shall originate with Contractor. RFIs submitted by entities other than Contractor will be returned with no response.

2. Engineer's Action: Engineer will review each RFI, determine action required, and return it. Allow ten (10) working days for Engineer's response for each RFI.

3. Review response and notify Engineer within seven days if Contractor disagrees with response.

1.8 PHOTOGRAPHIC DOCUMENTATION

A. Usage rights

1. Obtain and transfer copyright usage rights from photographer and videographer to Owner for unlimited reproduction of photographic documentation.

1.9 SUBMITTAL PROCEDURES

A. General

1. Electronic copies of CAD Drawings of the Contract Drawings will not be provided by Engineer for Contractor's use in preparing submittals.

2. Submittals in each specification are listed as a guide and are generally applicable.

a. Engineer may waive the requirement for certain listed submittals where not applicable.
b. Engineer may require submittals not listed where considered applicable.

B. Coordination: Coordinate preparation and processing of submittals with performance of construction activities.

1. Coordinate each submittal with fabrication, purchasing, testing, delivery, other submittals, and related activities that require sequential activity.

2. Coordinate transmittal of different types of submittals for related parts of the Work so processing will not be delayed because of need to review submittals concurrently for coordination.

    a. Engineer reserves the right to withhold action on a submittal requiring coordination with other submittals until related submittals are received.

C. Processing Time: Allow enough time for submittal review, including time for resubmittals, as follows. Time for review shall commence on Engineer's receipt of submittal. No extension of the Contract Time will be authorized because of failure to transmit submittals enough in advance of the Work to permit processing, including resubmittals.

1. Initial Review: Allow 15 days for initial review of each submittal. Allow additional time if coordination with subsequent submittals is required. Engineer will advise Contractor when a submittal being processed must be delayed for coordination.

2. Intermediate Review: If intermediate submittal is necessary, process it in same manner as initial submittal.

3. Resubmittal Review: Allow 15 days for review of each resubmittal.

4. Sequential Review: Where sequential review of submittals by Engineer and Engineer's consultants, Owner, or other parties is indicated, allow 24 days for initial review of each submittal.

D. Resubmittals: Make resubmittals in same form and number of copies as initial submittal.

1.10 QUALITY REQUIREMENTS

A. Conflicting Requirements

1. General: If compliance with two or more standards is specified and the standards establish different or conflicting requirements for minimum quantities or quality levels, comply with the most stringent requirement. Refer uncertainties and requirements that are different, but apparently equal, to Engineer for a decision before proceeding.

2. Minimum Quantity or Quality Levels: The quantity or quality level shown or specified shall be the minimum provided or performed. The actual installation may comply exactly with the minimum quantity or quality specified, or it may exceed the minimum within reasonable limits. To comply with these requirements, indicated numeric values are minimum or maximum, as appropriate, for the context of requirements. Refer uncertainties to Engineer for a decision before proceeding.

B. Qualifications

1. General: Qualifications paragraphs in this Article establish the minimum qualification levels required; individual Specification Sections specify additional requirements.

2. Professional Engineer Qualifications: A professional engineer who is legally qualified to practice in jurisdiction where Project is located and who is experienced in providing engineering services of the kind indicated.

3. Testing Agency Qualifications: An NRTL, an NVLAP, or an independent agency with the experience and capability to conduct testing and inspecting indicated, as documented according to ASTM E548; and with additional qualifications specified in individual Sections; and where required by authorities having jurisdiction, that is acceptable to authorities.

   a. NRTL: A nationally recognized testing laboratory according to 29 CFR 1910.7.
   b. NVLAP: A testing agency accredited according to NIST's National Voluntary Laboratory Accreditation Program.

4. Factory-Authorized Service Representative Qualifications: An authorized representative of manufacturer who is trained and approved by manufacturer to inspect installation of manufacturer's products that are similar in material, design, and extent to those indicated for this Project.

C. Quality Control

1. Tests and inspections not explicitly assigned to Owner are Contractor's responsibility. Perform quality-control services and

submit reports required of Contractor by authorities having jurisdiction, whether specified or not.

a. Engage a qualified testing agency to perform quality-control services where indicated and where laboratory testing is required.
    1) Contractor shall not employ same entity engaged by Owner, unless agreed to in writing by Owner.
b. Notify Engineer and testing agencies at least 24 hours in advance of time when Work that requires testing or inspecting will be performed.
c. Submit a certified written report, in duplicate, of each quality-control service.
d. Testing and inspecting requested by Contractor and not required by the Contract Documents are Contractor's responsibility.
e. Contractor Responsibilities
    1) Schedule sampling and testing in a timely manner with sufficient time for testing and analyzing results to prevent delaying the Work.
    2) Provide to Testing Agency the Contract Documents, Submittals, and other documentation defining compliance requirements for sampling and testing.
    3) Assist Testing Agency in obtaining test specimens.
    4) When testing is complete, remove test specimens and assemblies. Do not reuse products on Project. Patch or repair location of destructive testing specimen removal.

2. Manufacturer's Field Services: Where indicated, engage a factory-authorized service representative to inspect field-assembled components and equipment installation, including service connections.

3. Retesting/Reinspecting of Repaired or Replaced Work: Regardless of whether original tests or inspections were Contractor's responsibility, provide quality-control services, including retesting and reinspecting, for construction that repaired or replaced Work that failed to comply with the Contract Documents.

4. Retesting/Reinspection of Work: If, at any time prior to the end of the Correction Period, Engineer considers it necessary or advisable

that Work be re-observed by Engineer or reinspected or retested by Contractor or others, Contractor, at Engineer's request, shall uncover, expose, or otherwise make available for observation, inspection, or testing as Engineer may require, that portion of the Work in question, furnishing all necessary labor, material, and equipment.

a. Work shall be considered defective if it does not meet any one or more of the product and quality control testing requirements, performance requirements, or appearance or other requirements, normal wear and tear excepted.
b. If it is found that the Work is defective, Contractor shall pay all claims, costs, losses, and damages (including but not limited to all fees and charges of engineers, architects, attorneys, and other professionals and all court or arbitration or other dispute resolution costs) arising out of or relating to such uncovering, exposure, observation, inspection, and testing, and of satisfactory replacement or reconstruction (including but not limited to all costs of repair or replacement of work of others); and Owner shall be entitled to an appropriate decrease in the Contract Price. If the parties are unable to agree as to the amount thereof, Owner may make a Claim therefor.
c. If, the Work is not found to be defective, Contractor shall be allowed an increase in the Contract Price or an extension of the Contract Times, or both, directly attributable to such uncovering, exposure, observation, inspection, testing, replacement, and reconstruction. If the parties are unable to agree as to the amount or extent thereof, Contractor may make a Claim therefor.

5. Testing Agency Responsibilities: Cooperate with Engineer and Contractor in performance of duties. Provide qualified personnel to acquire samples and perform required tests and inspections.

a. Notify Engineer and Contractor promptly of irregularities or deficiencies observed in the Work during performance of its services.
b. Determine the location from which test samples will be taken and in which in-situ tests are conducted.

c. Conduct and interpret tests and inspections and state in each report whether tested and inspected work complies with or deviates from requirements.
d. Submit a certified written report, in duplicate, of each test, inspection, and similar quality-control service through Contractor.
e. Do not release, revoke, alter, or increase the Contract Document requirements or approve or accept any portion of the Work.
f. Do not perform any duties of Contractor.

1.11 TEMPORARY FACILITIES AND CONTROLS

A. Quality Assurance

1. Qualifications

a. Electric Service: Comply with NECA, NEMA, and UL standards and regulations for temporary electric service. Install service to comply with NFPA 70 and local power company requirements.
b. Tests and Inspections: Arrange for authorities having jurisdiction to test and inspect each temporary utility before use.
c. Tree Service Firm: An experienced tree service firm that has successfully completed tree protection and trimming work similar to that required for this Project and that will assign an experienced, qualified arborist to Project site during execution of tree protection and trimming.
d. Arborist: A Certified Arborist, a Registered Consulting Arborist, or a Registered Consulting Forester, licensed in the jurisdiction where Project is located, or an ISA Certified Arborist.
e. Tree Pruning Standard: Comply with ANSI A300 (Part 1), "Tree, Shrub, and Other Woody Plant Maintenance--Standard Practices (Pruning)."

2. Regulatory Requirements

a. Obtain required certifications and permits related to the temporary facilities and controls.

1.12 PRODUCT REQUIREMENTS

A. Substitution Requests

1. Substitution Requests: Submit three copies of each request for substitution.

    a. Engineer's Action: If necessary, Engineer will request additional information or documentation for evaluation within 7 days of receipt of a request for substitution. Engineer will notify Contractor of acceptance or rejection of proposed substitution within 15 days of receipt of request, or 7 days of receipt of additional information or documentation, whichever is later.

        1) Form of Acceptance: Indicated on Substitution Request Form and, where applicable, by Change Order.
        2) Use product specified if Engineer cannot make a decision on use of a proposed substitution within time allocated or substitution request denied.

B. Product Delivery, Storage, And Handling

1. Deliver, store, and handle products using means and methods that will prevent damage, deterioration, and loss, including theft. Comply with manufacturer's written instructions.

2. Delivery and Handling:

    a. Deliver products to Site in an undamaged condition in manufacturer's original sealed container or other packaging system, complete with labels and instructions for handling, storing, unpacking, protecting, and installing.

3. Storage:

    a. Store products to allow for inspection and measurement of quantity or counting of units.
    b. Store products that are subject to damage by the elements under cover in a weather tight enclosure above ground, with ventilation adequate to prevent condensation.
    c. Store cementitious products and materials on elevated platforms.
    d. Comply with product manufacturer's written instructions for temperature, humidity, ventilation, and weather-protection requirements for storage.

e. Protect stored products from damage and liquids from freezing.

C. Product Warranties

1. Warranties specified in Technical Specifications shall be in addition to, and run concurrent with, other warranties required by the Contract Documents. Manufacturer's disclaimers and limitations on product warranties do not relieve Contractor of obligations under requirements of the Contract Documents.

a. Manufacturer's Warranty: Preprinted written warranty published by individual manufacturer for a particular product and specifically endorsed by manufacturer to Owner.

1) Provide manufacturer’s standard published warranty for all products unless specified otherwise.

b. Special Warranty: Written warranty required by or incorporated into the Contract Documents, either to extend time limit provided by manufacturer's warranty or to provide more rights for Owner.

1.13 CUTTING AND PATCHING

A. Quality Assurance

1. Structural and Operational Elements: Do not cut and patch structural elements in a manner that could change their load-carrying capacity or load-deflection ratio. Do not cut and patch operating and other elements and related components in a manner that results in reducing their capacity to perform as intended or that results in increased maintenance or decreased operational life or safety.

2. Visual Requirements: Do not cut and patch construction in a manner that results in visual evidence of cutting and patching. Do not cut and patch construction exposed on the exterior or in occupied spaces in a manner that would, in Engineer's opinion, reduce the building's aesthetic qualities. Remove and replace construction that has been cut and patched in a visually unsatisfactory manner.

B. Warranties

1. Existing Warranties: Remove, replace, patch, and repair materials and surfaces cut or damaged during cutting and patching operations, by methods and with materials so as not to avoid existing warranties.

1.14 CLOSEOUT PROCEDURES

A. Substantial Completion

1. Preliminary Procedures: Before requesting final inspection for determining date of Substantial Completion, complete the following.

a. Prepare and submit a list of items to be completed and corrected (punch list).
b. Advise Owner of pending insurance changeover requirements.
c. Submit specific warranties, workmanship bonds, maintenance service agreements, final certifications, and similar documents not previously submitted.
d. Obtain and submit releases permitting Owner unrestricted use of the Work and access to services and utilities. Include occupancy permits, operating certificates, and similar releases.
e. Prepare and submit Project Record Documents, operation and maintenance manuals, Final Completion construction photographs, and similar final record information.
f. Deliver tools, spare parts, extra materials, and similar items to location designated by Owner.
g. Make final changeover of permanent locks and deliver keys to Owner. Advise Owner's personnel of changeover in security provisions.
h. Complete startup testing of systems.
i. Submit test/adjust/balance records.
j. Top off fuel tanks, lubricant reservoirs, and other consumable commodities.
k. Terminate and remove temporary facilities from Project site that interfere with Owner’s occupancy, along with construction tools and similar elements.
l. Advise Owner of changeover in utilities.

m. Submit changeover information related to Owner's occupancy, use, operation, and maintenance.
n. Complete final cleaning requirements.
o. Submit instructional program for demonstration and training.
p. Touch up and otherwise repair and restore marred exposed finishes to eliminate visual defects.
q. Submit product and other warranties.

B. List Of Incomplete Items (Punch List)

1. Preparation: Submit three copies of list on form provided.

C. Final Inspection

1. Inspection: Submit a written request for final inspection for consideration of Substantial Completion. On receipt of request, Engineer will either proceed with inspection or notify Contractor of unfulfilled requirements. Engineer will prepare after inspection a certified copy of Engineer's Substantial Completion inspection list of items to be completed or corrected (punch list), endorsed and dated by Engineer or will notify Contractor of construction that must be completed or corrected before certificate will be issued.

a. Reinspection: Request reinspection when the Work identified in previous inspections as incomplete is completed or corrected.

D. Warranties

1. Submittal Time: Submit written warranties with request for final inspection for Substantial Completion or upon commencement of warranties for designated portions of the Work where commencement is other than date of Substantial Completion.

2. Organize warranty documents into an orderly sequence based on the table of contents of the Project Manual.

a. Bind warranties and bonds in heavy-duty, 3-ring, vinyl-covered, loose-leaf binders, thickness as necessary to accommodate contents.
b. Provide heavy paper dividers for each separate warranty.

PART 2 - PRODUCTS

2.1 FORMS, GENERAL

A. Utilize forms included as Attachment A to this Section or software generated forms.

1. Software-generated forms shall have substantially the same content as form provided and shall be approved by Engineer.

2. Incomplete forms will be returned by Engineer to Contractor without action.

B. Forms and attachments shall be electronic files in Adobe Acrobat PDF format.

2.2 PROJECT MANAGEMENT AND COORDINATION FORMS

A. Schedules and Requests for Information (RFIs)

1. Attachments: Include drawings, descriptions, measurements, photos, product data, Shop Drawings, and other information necessary to fully describe items.

a. Supplementary drawings prepared by Contractor shall include dimensions, thicknesses, structural grid references, and details of affected materials, assemblies, and attachments.
b. Contractor's suggested solution(s), where applicable. If Contractor's solution(s) impact the Contract Time or the Contract Price, Contractor shall state impact.
c. Field Condition Reports: Immediately on discovery of a difference between field conditions and the Contract Documents, prepare and submit a detailed report. Submit with a request for interpretation. Include a detailed description of the differing conditions, together with recommendations for changing the Contract Documents.

B. Progress Schedule

1. Type: Progress Schedules may be horizontal chronological Gantt charts or chronological CPM charts. Indicate each significant

construction activity separately. Identify first workday of each week with a continuous vertical line.

2. Time Frame: Extend schedule from date established for the Notice to Proceed to date of Final Completion.

3. Activities: Treat each principal element of the Work as a separate numbered activity.

   a. Substantial Completion: Indicate completion in advance of date established for Substantial Completion and allow time for Engineer's administrative procedures necessary for certification of Substantial Completion.

4. Milestones: Include milestones indicated in the Contract Documents in schedule, including, but not limited to, the Notice to Proceed, Substantial Completion, and Final Completion.

5. Contract Modifications: For each proposed contract modification and concurrent with its submission, submit a revised Progress Schedule to demonstrate the effect of the proposed change on the overall project schedule.

C. Reports

1. Daily Construction Reports: Prepare a daily construction report, signed and dated by Contractor’s resident superintendent.

2.3 PHOTOGRAPHIC MEDIA

A. Digital Images: Provide color images in JPG format, produced by a digital camera with minimum sensor size of 4.0 megapixels and minimum color depth of 24 bits.

B. Digital Video Format: Deliver video in compatible format with Owner’s and Engineer’s computer systems.

2.4 SUBMITTALS

A. General: Prepare and submit to Engineer or Owner, as indicated, submittals required by individual Specification Sections. Use submittal transmittal form provided.

1. Provide all Submittals in electronic format, except for the following:
    a. Samples.
    b. Record Documents and Operations and Maintenance Data
        1) Provide in both digital and paper format.
2. When submitting to Engineer, post electronic submittals, including submittal transmittals, as PDF electronic files directly to Engineer's e-mail or Engineer's FTP site folder specifically established for Project.
3. Physical Submittals
    a. Submit three (3) Samples. Engineer will return one Sample.
    b. Submit two (2) paper copies of Record Drawings along with digital documents.
    c. Transmit Submittals required for Record Documents or Operations and Maintenance Manual after submittals are final.
4. Clearly mark each copy of each submittal in a manner that can be photocopied or printed to show:
    a. Applicable products and options where more than one product or option is described.
    b. Deviations from the Contract Documents.

B. Action Submittals

1. Product Data
    a. Submit Product Data before or concurrent with Samples.
2. Shop Drawings: Do not base Shop Drawings on reproductions of the Contract Documents or standard printed data. Fully illustrate requirements in the Contract Documents.
3. Samples: Submit Samples for review of kind, color, pattern, and texture for a check of these characteristics with other elements and

for a comparison of these characteristics between submittal and actual component as delivered and installed.

C. Informational Submittals

1. Key Personnel Names: List of key personnel assignments, including superintendent, designated "competent person" for excavation Work, and other personnel in attendance at Project site, including addresses, telephone numbers, including home, mobile, and office telephone numbers, and e-mail addresses.

2. Photographic Media

a. Submit two prints of each photographic view in clear plastic sleeves that are punched for standard 3-ring binder.

1) Identification: On back of each print, provide an applied label or rubber-stamp with the following information:

a) Name of Project.

b) Date photograph was taken if not date stamped by camera.

c) Description of vantage point, indicating location, direction (by compass point), and elevation or story of construction.

d) Unique sequential identifier.

b. Submit a complete set of digital image electronic files on media acceptable to Owner. Submit with printed photographs. Identify electronic media with date photographs were taken. Submit images that have same aspect ratio as the sensor or film negative, uncropped.

c. Key Plan: Submit key plan of Project site with notation of vantage points marked for location and direction of each construction photograph and video. Include same label information as corresponding set of photographs or video.

3. Videos: Submit copies of each video to Owner and Engineer.

a. Identification: On each copy, provide an applied label with the following information:

1) Name of Project.

2) Date video was recorded.

3) Description of vantage point, indicating location, direction (by compass point), and elevation or story of construction.
4) Weather conditions at time of recording.

4. Test and Inspection Reports: Indicate in transmittal all tests or inspections that indicate workmanship or materials that do not comply with Contract Documents.

5. Qualification Data: Prepare written information that demonstrates capabilities and experience of firm or person. Include lists of completed projects with project names and addresses, names and addresses of engineers and owners, and other information specified.

6. Certificates: Prepare written certification on appropriate letterhead for; welding, installer, manufacturer, product, and materials.

7. Reports: Prepare written reports, where indicated, for; material tests, product tests, research/evaluation, preconstruction tests, compatibility tests, field tests, maintenance data, design data, transition plans, manufacturer's instructions, manufacturer's field reports, insurance certificates, and bonds.

2.5 TEMPORARY FACILITIES AND CONTROLS

A. Materials

1. Chain-Link Fencing: Minimum 2-inch, 0.148-inch thick, galvanized steel, chain-link fabric fencing; minimum 6 feet high with galvanized steel pipe posts; minimum 2-3/8-inch OD line posts and 2-7/8-inch OD corner and pull posts, with 1-5/8-inch OD top rails.

2. Portable Chain-Link Fencing: Minimum 2-inch, 9-gage, galvanized steel, chain-link fabric fencing; minimum 6 feet high with galvanized steel pipe posts; minimum 2-3/8-inch OD line posts and 2-7/8-inch OD corner and pull posts, with 1-5/8-inch OD top and bottom rails. Provide concrete or galvanized steel bases for supporting posts.

B. Temporary Facilities

1. Storage and Fabrication Sheds: Provide sheds as required sized, furnished, and equipped to accommodate materials and equipment for construction operations.
    a. Store combustible materials apart from building.
2. Sanitary Facilities: Provide sanitary facilities in accordance with applicable regulations.

C. Equipment

1. Fire Extinguishers: Portable, UL rated; with class and extinguishing agent as required by locations and classes of fire exposures.
2. HVAC Equipment: Unless Owner authorizes use of permanent HVAC system, provide vented, self-contained, liquid-propane-gas or fuel-oil heaters with individual space thermostatic control.
3. Locks: Provide keys to Owner for locks to areas Owner must access.

D. Temporary Traffic Controls Devices

1. Temporary traffic control devices shall comply with Section 801 of the INDOT SS.

2.6 PRODUCT REQUIREMENTS

A. Product Selection Procedures

1. General Product Requirements: Provide products that comply with the Contract Documents, that are undamaged and, unless otherwise indicated, that are new at time of installation.
    a. Provide products of the latest model or style complete with accessories, trim, finish, fasteners, and other items needed for a complete installation and indicated use and effect.
    b. Standard Products: If available, and unless custom products or nonstandard options are specified, provide standard products of types that have been produced and used successfully in similar situations on other projects.
    c. Descriptive, performance, and reference standard requirements in the Specifications establish "salient characteristics" of products.

B. Product Substitutions

1. Timing: Engineer will consider requests for substitution if received within 60 days after the Notice to Proceed. Requests received after that time may be considered or rejected at discretion of Engineer.

2. Conditions: Engineer will consider Contractor's request for substitution when the following conditions are satisfied. If the following conditions are not satisfied, Engineer will return requests without action, except to record noncompliance with these requirements:

   a. Requested substitution offers Owner a substantial advantage in cost, time, energy conservation, or other considerations, after deducting additional responsibilities Owner must assume.
      1) Owner's additional responsibilities may include compensation to Engineer for redesign and evaluation services, increased cost of other construction by Owner, and similar considerations.
   b. Requested substitution:
      1) Does not require extensive revisions to the Contract Documents.
      2) Is consistent with the Contract Documents and will produce indicated results.
      3) Will not adversely affect Progress Schedule.
      4) Has received necessary approvals of authorities having jurisdiction.
      5) Is compatible with other portions of the Work.
      6) Has been coordinated with other portions of the Work.
      7) Provides specified warranty.

C. Comparable Products

1. Conditions: Engineer will consider Contractor's request for a comparable product when the following conditions are satisfied. If the following conditions are not satisfied, Engineer will return requests without action, except to record noncompliance with these requirements:

   a. Evidence that the proposed product does not require extensive revisions to the Contract Documents, that it is

consistent with the Contract Documents, that it will produce the indicated results, and that it is compatible with other portions of the Work.

b. Detailed comparison of significant qualities of proposed product with those named in the Specifications. Significant qualities include attributes such as performance, weight, size, durability, visual effect, and specific features and requirements indicated.

c. Evidence that proposed product provides specified warranty.

d. List of similar installations for completed projects with project names and addresses and names and addresses of Engineers and owners, if requested.

e. Samples, if requested.

f. Any additional requirements in the specifications describing the product.

2.7 CUTTING AND PATCHING

A. In-Place Materials: Use materials identical to in-place materials. For exposed surfaces, use materials that visually match in-place adjacent surfaces to the fullest extent possible.

1. If identical materials are unavailable or cannot be used, use materials that, when installed, will match the visual and functional performance of in-place materials.

2.8 RECORD DOCUMENTS

A. Record Drawings

1. Record Drawings: Maintain one set of black-line white prints of the Drawings and Shop Drawings for use as Record Drawings.

a. Preparation: Mark Record Drawings to show the actual installation where installation varies from that shown originally.

1) Give particular attention to information on concealed elements that would be difficult to identify or measure and record later.

2) Accurately record information in a clear and understandable drawing technique.
3) Record data up-to-date daily. Record and check the markup before enclosing concealed installations.

b. Mark existing and abandoned utilities, including services, whether shown on the Drawings or not.
c. Mark important additional information that was either shown schematically or omitted from original Drawings.

2. Newly Prepared Record Drawings: Prepare new drawings as Record Drawings where Engineer determines that neither the original Drawings nor Shop Drawings are suitable to show actual installation.

a. New drawings may be required when a Change Order is issued as a result of accepting an alternate, substitution, or other modification.

3. Format: Identify and date each Record Drawing to include the designation "RECORD DRAWING" in a prominent location.

B. Record Product Data and Shop Drawings

1. Preparation: Mark Product Data and Shop Drawings to indicate the actual product installation where installation varies substantially from that indicated in submittal.

C. Miscellaneous Record Submittals

1. Assemble miscellaneous records required by other Specification Sections for miscellaneous record keeping and submittal in connection with actual performance of the Work.

2. Final Photographic Record: Prepare and submit final photographic and video record.

PART 3 - EXECUTION

3.1 APPLICATIONS AND OTHER FORMS

A. Complete all applicable information on each form prior to submission.

B. Submit by method ensuring delivery.

C. Engineer will return incomplete applications and other forms without action.

3.2 SCHEDULE

A. Progress Schedule Updating: At monthly intervals, update schedule to reflect actual construction progress and activities. Issue schedule one week before each regularly scheduled progress meeting or, if no regularly scheduled progress meetings are scheduled, with each Pay Estimate.

3.3 CONSTRUCTION PHOTOGRAPHS

A. General: Take photographs using the maximum range of depth of field, and that are in focus, to clearly show the Work. Photographs with blurry or out-of-focus areas will not be accepted.

B. Preconstruction Photographs: Before starting construction, take photographs of Project site and surrounding properties, including existing items to remain during construction, from different vantage points, including existing conditions of:

1. Adjacent to property before starting the Work.

2. Trees and plantings, adjoining construction, and site improvements that might be misconstrued as damage caused by site clearing.

3. Buildings either on or adjoining property to accurately record physical conditions at start of construction.

4. Pre-construction settlement or cracking of adjacent structures, pavements, and improvements.

C. Final Completion Construction Photographs: Take color photographs at same locations as pre-construction photographs after date of Substantial Completion for submission as Project Record Documents. Take additional photographs as directed by Engineer adequate to document Project.

3.4 CONSTRUCTION VIDEOS

A. Applicability: Provide a time-lapse recording of the entire project from beginning to end.

B. Recording: Mount camera in a location that covers the entire site horizontally and vertically. Display continuous running time and date.

~~C. Narration: Describe scenes on video by audio narration by microphone while video is recorded. Include description of items being viewed, recent events, and planned activities. At each change in location, describe vantage point, location, direction by compass point, and elevation or story of construction.~~

~~1. Confirm date and time at beginning and end of recording.~~

~~2. Begin each video with name of Project and Project location.~~

3.5 SUBMITTALS

A. Submittals Schedule

1. Action Submittals: Obtain approval of Action Submittals prior to ordering of product or any related Work.

2. Informational Submittals. Submit Informational Submittals with adequate time for review and revisions, as required, before the following milestones:

   a. For qualifications and individual's certifications, prior to Work by the qualified firm or person.
   b. For coordination, implementation, manufacturer's testing and certification, design data, manufacturer's instructions and warranties, prior to installation of the product or system.
   c. For field reports, within fourteen (14) days after conducting activity.
   d. Prior to notification of Substantial Completion.
      1) Project Record Documents, including
         a) Product Data

b) Shop Drawings
c) Factory Test Reports
d) Field Test Reports
e) Manufacturer's Operations and Maintenance Literature
f) Record Drawings

B. Contractor's Review

1. Review each submittal and check for coordination with other Work of the Contract and for compliance with the Contract Documents. Note corrections and field dimensions.

C. Engineer's Action

1. General

a. Engineer will return submittals without action that are not transmitted, certified by Contractor, and marked in compliance with these requirements.
b. Partial submittals are not acceptable, will be considered nonresponsive, and will be returned without review.
c. Submittals not required by the Contract Documents may not be reviewed and may be discarded.

2. Action Submittals

a. Engineer will review each submittal, make marks to indicate corrections or modifications required, and return it. Engineer will stamp each submittal with an action stamp and will mark stamp appropriately to indicate action taken.
b. Resubmit submittals until they are final.

3. Informational Submittals: Engineer will review each submittal and will not return it or will return it if it does not comply with requirements.

D. Disposition Of Submittals

1. Distribution: Furnish copies of final submittals to manufacturers, subcontractors, suppliers, fabricators, installers, authorities having jurisdiction, and others as necessary for performance of construction activities.

2. Use for Construction: Use only final "Approved" or "Approved as Noted" submittals.

3.6 QUALITY CONTROL

A. Repair And Protection

1. General: On completion of testing, inspecting, sample taking, and similar services, repair damaged construction and restore substrates and finishes.

   a. Provide materials and comply with installation requirements specified in other Specification Sections. Restore patched areas and extend restoration into adjoining areas with durable seams that are as invisible as possible.

3.7 TEMPORARY FACILITIES AND CONTROLS

A. Temporary Utility Installation

1. General: Install temporary service or connect to existing service.

   a. Arrange with utility company, Owner, and existing users for time when service can be interrupted, if necessary, to make connections for temporary services.

2. Sewers and Drainage: Provide temporary utilities to remove effluent lawfully.

   a. Connect temporary sewers to municipal system where available, otherwise connect to or provide private system. Connect as directed by authorities having jurisdiction.

3. Water Service: Install water service and distribution piping in sizes and pressures adequate for construction.

4. Sanitary Facilities: Provide temporary toilets, wash facilities, and drinking water for use of construction personnel. Comply with authorities having jurisdiction for type, number, location, operation, and maintenance of fixtures and facilities. At a minimum, provide chemical sanitary portable toilets at each site where work is being conducted within 100 yards of workers.

5. Heating and Cooling: Provide temporary heating and cooling required for stored materials and equipment, by construction activities for curing or drying of completed installations, or for protecting installed construction from adverse effects of low temperatures or high humidity.

6. Ventilation and Humidity Control: Provide temporary ventilation required by construction activities for curing or drying of completed installations or for protecting installed construction from adverse effects of high humidity. Coordinate ventilation requirements to produce ambient condition required.

7. Electric Power Service: Provide electric power service and distribution system of sufficient size, capacity, and power characteristics required for construction operations.

    a. Install electric power service according to utility's direction, unless otherwise indicated.

8. Lighting: Provide temporary lighting with local switching that provides adequate illumination for construction operations, observations, inspections, and traffic conditions.

9. Telephone Service: Provide temporary telephone service in field offices. Install minimum two telephone lines for each field office.

    a. Provide superintendent with cellular telephone for use when away from field office.

B. Support Facilities Installation

1. General: Comply with the following:

    a. Provide incombustible construction for offices, shops, and sheds located within construction area or within 30 feet of building lines. Comply with NFPA 241.

2. Temporary Roads and Paved Areas: Construct and maintain temporary roads and paved areas adequate for construction operations.

3. Parking: Provide temporary parking areas for construction personnel.

4. Mailboxes: Provide temporary installations of existing mailboxes affected by the Work in a manner and at a location to be accessible to postal carriers. Notify postmaster whenever a mailbox has been temporarily relocated. Restore mailbox installations to original condition as soon as practicable.

5. Dewatering Facilities and Drains: Comply with requirements of authorities having jurisdiction. Maintain Project site, excavations, and construction free of water.

6. Waste Disposal Facilities: Provide waste-collection containers in sizes adequate to handle waste from construction operations. Comply with requirements of authorities having jurisdiction.

C. Security And Protection Facilities Installation

1. Environmental Protection: Provide protection, operate temporary facilities, and conduct construction in ways and by methods that comply with environmental regulations and that minimize possible air, waterway, and subsoil contamination or pollution or other undesirable effects.

2. Barricades, Warning Signs, and Lights: Comply with requirements of authorities having jurisdiction for erecting structurally adequate barricades, including warning signs and lighting.

3. Temporary Enclosures: Provide temporary enclosures for protection of construction, in progress and completed, from exposure, foul weather, other construction operations, and similar activities.

4. Temporary Fire Protection: Install and maintain temporary fire-protection facilities of types needed to protect against reasonably predictable and controllable fire losses. Comply with NFPA 241 and other applicable regulations.

D. Maintenance Of Traffic

1. Notify authorities at least seven (7) days prior to work in existing roadway or right-of-way.

2. Work In or Near Roadway

a. Comply with requirements of authorities having jurisdiction.

b. Obtain prior written authorization from authorities having jurisdiction before closing lanes or entire roadways.
c. Provide detour route where required to maintain traffic.
d. Provide a smooth temporary driving surface where pavement has been disturbed until permanent repair can be completed. Temporary driving surface shall be in compliance with requirements of authorities having jurisdiction and shall be suitable for travel at the design speed of road.
e. Provide temporary surfaces for traffic ingress and egress from abutting property.
f. Maintain temporary surface until final repairs are complete.
g. Do not reuse material provided for temporary driving surface.

3. Traffic Controls: Comply with requirements of authorities having jurisdiction.

E. Tree Protection

1. Erect and maintain temporary fencing around tree protection zones before starting site clearing. Maintain fence and remove fence when construction is complete.

2. Protect tree root systems from damage, flooding, and erosion.

3. Maintain fenced area free of weeds and trash.

4. Maintain lawns within fenced area.

5. Do not excavate within tree protection zones.

6. Regrading within Tree Protection Zone

a. Grade Lowering: Where new finish grade is indicated below existing grade around trees, slope grade away from trees as recommended by arborist, unless otherwise indicated.
1) Root Pruning: Prune tree roots exposed during grade lowering. Do not cut main lateral roots or taproots; cut only smaller roots. Cut roots with sharp pruning instruments; do not break or chop.
b. Minor Fill: Where existing grade is 6 inches or less below elevation of finish grade, fill with topsoil. Place topsoil in a single uncompacted layer and hand grade to required finish elevations.

c. Moderate Fill: Where existing grade is more than 6 inches but less than 12 inches below elevation of finish grade, place drainage fill, filter fabric, and topsoil on existing grade as follows:
   1) Carefully place drainage fill against tree trunk approximately 2 inches above elevation of finish grade and extend not less than 18 inches from tree trunk on all sides. For balance of area within drip-line perimeter, place drainage fill up to 6 inches below elevation of grade.
   2) Place filter fabric with edges overlapping 6 inches minimum.
   3) Place fill layer of topsoil to finish grade. Do not compact drainage fill or topsoil. Hand grade to required finish elevations.

7. Repair trees and vegetation not indicated to be removed that are damaged by construction operations
   a. Conduct tree and vegetation repairs at the direction of Arborist.
   b. Promptly repair trees damaged by construction operations within 24 hours.
   c. Treat damaged trunks, limbs, and roots according to arborist's written instructions.
8. Replace trees and shrubs that cannot be repaired and restored to full-growth status.
   a. Obtain Tree Services firm and Arborist to prepare plan of tree and shrub replacement.
   b. Replace trees and shrubs in kind, to the extent reasonably possible.

F. Operation, Termination, And Removal
1. Maintenance: Maintain facilities in good operating condition until removal.
2. Temporary Facility Changeover: Do not change over from using temporary security and protection facilities to permanent facilities until Substantial Completion.

3. Termination and Removal: Remove each temporary facility when need for its service has ended, when it has been replaced by authorized use of a permanent facility, or no later than Substantial Completion. Complete or, if necessary, restore permanent construction that may have been delayed because of interference with temporary facility. Repair damaged Work, clean exposed surfaces, and replace construction that cannot be satisfactorily repaired.

    a. Materials and facilities that constitute temporary facilities are property of Contractor.

3.8 EXECUTION REQUIREMENTS

A. Preparation

1. Existing Utility Information: Complete the following prior to initiation of construction of the Project.

    a. Notify utility locator service for area where Project is located before Work at the Site.
    b. Furnish information to local utility that is necessary to adjust, support, move, or relocate existing utility structures, utility poles, lines, services, or other utility appurtenances located in or affected by construction. Coordinate with authorities having jurisdiction.
    c. Excavate, expose, and confirm the location, size, elevation, material, and other relevant information of all underground utilities to be connected with the Work.

2. Field Measurements: Take field measurements as required to fit the Work properly. Recheck measurements before installing each product. Where portions of the Work are indicated to fit to other construction, verify dimensions of other construction by field measurements before fabrication. Coordinate fabrication schedule with construction progress to avoid delaying the Work.

3. Space Requirements: Verify space requirements and dimensions of items shown diagrammatically on Drawings.

B. Construction Layout

1. Verification: Before proceeding to lay out the Work, verify layout information shown on Drawings in relation to the property survey and existing benchmarks. If discrepancies are discovered, notify Engineer promptly.

2. General: Lay out the Work using accepted surveying practices.
   a. Establish benchmarks and control points to set lines and levels at each structure and elsewhere as needed to locate each element of Project.
   b. Do not scale Drawings to obtain required dimensions.
   c. Notify Engineer when deviations from required lines and levels exceed allowable tolerances.
   d. Close site surveys with an error of closure equal to or less than the standard established by authorities having jurisdiction.

3. Site Improvements: Locate and lay out site improvements, including pavements, grading, fill and topsoil placement, utility slopes, and invert elevations.

4. Structure Lines and Levels: Locate and lay out control lines and levels for structures, foundations, and floor levels, including those required for mechanical and electrical work. Transfer survey markings and elevations for use with control lines and levels. Level foundations and piers from two or more locations.

5. Record Log: Maintain a log of layout control work. Record deviations from required lines and levels. Include beginning and ending dates and times of surveys, weather conditions, name and duty of each survey party member, and types of instruments and tapes used. Make the log available for reference by Engineer.

C. Field Engineering

1. Reference Points: Preserve and protect benchmarks and control points during construction operations.
   a. Report promptly to Engineer and replace lost or destroyed permanent benchmarks, control points, and property corner pins.

2. Contractor's Use of Engineer's CAD Files

a. General: At Contractor's written request, copies of Engineer's CAD files will be provided to Contractor for Contractor's use in connection with field engineering, subject to the following conditions:
   1) Provide Engineer’s standard disclaimer documentation.

3. Temporary Reference Points: Establish and maintain necessary reference points on Project site, referenced to established benchmarks.
   a. Where the actual location or elevation of layout points cannot be marked, provide temporary reference points sufficient to locate the Work.
   b. Remove temporary reference points when no longer needed. Restore marked construction to its original condition.

D. Installation

1. General: Locate the Work and components of the Work accurately, in correct alignment and elevation, as indicated.
   a. Make vertical work plumb and make horizontal work level.
   b. Locate within tolerances of good construction practice and acceptable to Engineer.
2. Comply with manufacturer's written instructions and recommendations for installing products in applications indicated.
3. Conduct construction operations so no part of the Work is subjected to damaging operations or loading in excess of that expected during normal conditions of occupancy.
4. Templates: Obtain and distribute to the parties involved templates for work specified to be factory prepared and field installed.
5. Anchors and Fasteners: Provide anchors and fasteners as required to anchor each component securely in place, accurately located and aligned with other portions of the Work.
   a. Mounting Heights: Where mounting heights are not indicated, mount components at heights directed by Engineer.
   b. Allow for structure movement, including thermal expansion and contraction.

c. Coordinate installation of anchorages. Furnish setting drawings, templates, and directions for installing anchorages, including sleeves, concrete inserts, anchor bolts, and items with integral anchors, that are to be embedded in concrete or masonry.

6. Hazardous Materials: Use products, cleaners, and installation materials that are not considered hazardous by regulatory agencies for their application.

7. Locks: Provide two sets of keys to facilities locks to Engineer and Owner prior to installation of locks.

E. Progress Cleaning

1. General: Clean Project site and work areas daily. Enforce requirements strictly. Dispose of materials lawfully.

a. Comply with requirements in NFPA 241 and State and local requirements for removal of combustible waste materials and debris.
b. Do not hold waste material and debris for more than 7 days during normal weather or 3 days if the temperature is expected to rise above 80 deg F.
c. Containerize hazardous and unsanitary waste materials separately from other waste. Mark containers appropriately and dispose of legally, according to regulations.

2. Site: Maintain Project site free of waste materials and debris.

3. Fire Hydrants: Maintain access to all in-service public and private fire hydrants at all times.

a. A minimum clear space of 10 feet radius around the hydrants shall be kept clear of all soil, stone, materials, equipment, and other obstructions.

4. Work Areas: Clean areas where work is in progress to the level of cleanliness necessary for proper execution of the Work.

a. Remove liquid spills promptly in accordance with Spill Pollution Prevention Plan where applicable.

5. Waste Disposal: Burying or burning waste materials on-site will not be permitted. Washing waste materials down sewers or into waterways will not be permitted.

6. Limiting Exposures: Supervise construction operations to assure that no part of the construction, completed or in progress, is subject to harmful, dangerous, damaging, or otherwise deleterious exposure during the construction period.

F. Starting and Adjusting

1. Prior to starting and adjusting:

   a. Provide and install lubricants, coolants, and other consumable products in all mechanical and other devices according to manufacturer's recommendations.
   b. Fill all fuel tanks.

2. Start equipment and operating components to confirm proper operation. Remove malfunctioning units, replace them with new units, and retest.

3. Adjust equipment and operating components for proper operation.

4. Test each piece of equipment to verify proper operation. Test and adjust controls and safeties. Replace damaged and malfunctioning controls and equipment.

5. Manufacturer's Field Service: Provide the services of a factory-authorized service representative when required by installation, manufacturer's recommendations, or Contract Documents to inspect, adjust, and startup field-assembled components and equipment installation.

G. Correction of the Work

1. Repair or remove and replace defective construction. Restore damaged substrates and finishes.

   a. Repairing includes replacing defective parts, refinishing damaged surfaces, touching up with matching materials, and properly adjusting operating equipment.

2. Restore permanent facilities used during construction to their pre-construction or other specified condition.

3. Remove and replace damaged surfaces that are exposed to view if surfaces cannot be repaired without visible evidence of repair.

4. Repair components that do not operate properly. Remove and replace operating components that cannot be repaired.

3.9 CUTTING AND PATCHING

A. Examination

1. Examine surfaces to be cut and patched and conditions under which cutting and patching are to be performed.

   a. Compatibility: Before patching, verify compatibility with and suitability of substrates, including compatibility with in-place finishes or primers.
   b. Proceed with installation only after unsafe or unsatisfactory conditions have been corrected.

B. Preparation

1. Temporary Support: Provide temporary support of Work to be cut.

2. Protection: Protect in-place construction during cutting and patching to prevent damage. Provide protection from adverse weather conditions for portions of Project that might be exposed during cutting and patching operations.

3. Existing Utility Services and Mechanical/Electrical Systems: Where existing services/systems are required to be removed, relocated, or abandoned, bypass such services/systems before cutting to minimize or prevent, at Owner's directive, interruption.

C. Performance

1. General: Employ skilled workers to perform cutting and patching. Proceed with cutting and patching at the earliest feasible time, and complete without delay.

2. Cutting: Cut in-place construction by sawing, drilling, breaking, chipping, grinding, and similar operations, including excavation, using methods least likely to damage elements retained or adjoining construction. If possible, review proposed procedures with original installer.
    a. In general, use hand or small power tools designed for sawing and grinding, not hammering and chopping. Cut holes and slots as small as possible, neatly to size required, and with minimum disturbance of adjacent surfaces. Temporarily cover openings when not in use.
    b. Finished Surfaces: Cut or drill from the exposed or finished side into concealed surfaces.
    c. Concrete and Masonry: Cut using a cutting machine, such as an abrasive saw or a diamond-core drill.
    d. Mechanical and Electrical Services: Cut off pipe or conduit in walls or partitions to be removed. Cap, valve, or plug and seal remaining portion of pipe or conduit to prevent entrance of moisture or other foreign matter after cutting.
3. Patching: Patch construction by filling, repairing, refinishing, closing up, and similar operations following performance of other Work. Patch with durable seams that are as invisible as possible. Comply with installation requirements specified in other Sections when applicable.
    a. Inspection: Where feasible, test and inspect patched areas after completion to demonstrate integrity of installation.
    b. Exposed Finishes: Restore exposed finishes of patched areas and extend finish restoration into retained adjoining construction in a manner that will eliminate evidence of patching and refinishing.
        1) Clean piping, conduit, and similar features before applying paint or other finishing materials.
        2) Restore damaged pipe covering to its original condition.
4. Cleaning: Clean areas and spaces where cutting and patching are performed. Completely remove paint, mortar, oils, putty, and similar materials.

3.10 FINAL CLEANING

A. General: Provide final cleaning. Employ experienced workers or professional cleaners for final cleaning. Clean each surface or unit to condition expected for a new facility. Comply with manufacturer's written instructions.

B. Cleaning Agents: Use cleaning materials and agents recommended by manufacturer or fabricator of the surface to be cleaned. Do not use cleaning agents that are potentially hazardous to health or property or that might damage finished surfaces.

C. Complete the following cleaning operations before requesting inspection for certification of Substantial Completion for entire Project or for a portion of Project:

1. Clean Project Site, yard, and grounds, in areas disturbed by construction activities, including landscape development areas, of rubbish, waste material, litter, and other foreign substances.

2. Sweep paved areas broom clean. Remove petrochemical spills, stains, and other foreign deposits.

3. Rake grounds that are neither planted nor paved to a smooth, even-textured surface.

4. Remove tools, construction equipment, machinery, and surplus material from Project Site.

5. Remove snow and ice to provide safe access where applicable.

6. Sweep concrete floors broom clean in unoccupied spaces.

7. Remove labels that are not permanent.

8. Touch up and otherwise repair and restore marred, exposed finishes and surfaces. Replace finishes and surfaces that cannot be satisfactorily repaired or restored or that already show evidence of repair or restoration.

a. Do not paint over "UL" and similar labels, including mechanical and electrical nameplates.

9. Wipe surfaces of mechanical and electrical equipment, and similar equipment. Remove excess lubrication, paint and mortar droppings, and other foreign substances.

10. Replace parts subject to unusual operating conditions.

11. Clean exposed piping and fittings to a sanitary condition, free of stains, including stains resulting from water exposure.

12. Leave Project clean and ready for occupancy.

D. Do not burn waste materials. Do not bury debris or excess materials on Owner's property. Do not discharge volatile, harmful, or dangerous materials into drainage systems. Remove waste materials from Project site and dispose of lawfully.

3.11 RECORD DOCUMENTS

A. Recording And Maintenance

1. Recording: Maintain one copy of each submittal during the construction period for Record Document purposes. Post changes and modifications to Record Documents as they occur; do not wait until the end of Project.

2. Maintenance of Record Documents: Store Record Documents in a fireproof safe apart from the Contract Documents used for construction. Store Record Documents in field office where available. Do not use Record Documents for construction purposes. Maintain Record Documents in good order and in a clean, dry, legible condition, protected from deterioration and loss. Provide access to Record Documents for Engineer's reference during normal working hours.

END OF SECTION 01001

01110

Summary of the Work

SECTION 01110
SUMMARY OF THE WORK

PART 1 - GENERAL

1.1 SUMMARY

A. This Section includes the following:

1. Work covered by the Contract Documents
2. Type of Contract
3. Work phases
4. Limitations on the sequence of Work
5. Work under other contracts
6. Products ordered in advance
7. Owner-furnished products
8. Use of premises
9. Project utility services
10. Owner's occupancy requirements
11. Work restrictions
12. Bypass pumping
13. Transition of critical systems
14. Specification formats and conventions

B. Related Sections include the following:

1. Section 01500 - Temporary Facilities and Controls for limitations and procedures governing temporary use of Owner's facilities.

1.2 WORK COVERED BY CONTRACT DOCUMENTS

A. Project Identification: Chandler 1.5 Million Gallon Water Tower, Project No. 240050

B. Project Location: 2855 IN-261, Newburgh, IN 47630

C. Owner's Representative: Tyler Kinder, Director of Chandler Utilities

D. Construction Manager for this Project is Contractor. In Divisions 1 through 16 Sections, the terms "Construction Manager" and "Contractor" are synonymous.

E. The Work is generally described in Section 00110 - Advertisement for Bids and more fully described in the Contract Documents.

1.3 TYPE OF CONTRACT

A. Project will be constructed under a single prime contract.

1.4 WORK PHASES

A. The Work will be done under one (1) phase.

1.5 LIMITATIONS ON CONSTRUCTION SEQUENCING

A. The following limitations are placed on the sequencing of the Work.

1. None

1.6 WORK UNDER OTHER CONTRACTS

A. General: Cooperate fully with separate contractors so work on those contracts may be carried out smoothly, without interfering with or delaying work under this Contract. Coordinate the Work of this Contract with work performed under separate contracts.

B. Preceding Work: No preceding work is applicable to this Project.

C. Concurrent Work: Owner will award a separate contract for the following construction operations at Project site. Those operations will be conducted simultaneously with work under this Contract.

1. None

D. Future Work: Owner will award separate contract(s) for the following additional work to be performed at site after Substantial Completion. Completion of that work will depend on successful completion of preparatory work under this Contract.

1. None

1.7 PRODUCTS ORDERED IN ADVANCE

A. Owner has not ordered products in advance with suppliers of material and equipment to be assigned to Contractor and incorporated into the Project.

1.8 OWNER-FURNISHED PRODUCTS

A. Owner will not be furnishing products to be incorporated into the Project.

1.9 EXISTING PRODUCTS TO BE SALVAGED

A. Salvage the following products.

1. None

1.10 USE OF PREMISES

A. General: Contractor shall have use of premises for construction operations, including use of Project site, during construction period, limited only as specifically indicated in these Contract Documents.

B. Use of Site: Limit use of premises to areas within the Contract limits indicated. Do not disturb portions of Project site beyond areas in which the Work is indicated.

1. Limits: Confine constructions operations to:
    a. Indicated limits of Work.
        1) Where no limits of Work are indicated, limit work to Site limits.
    b. Designated public rights-of-way, Owner-provided permanent and temporary easements, and noted areas outside of the Site limits or limits of Work indicated on Drawings.
    c. Additional temporary easements obtained by Contractor for the Work and accepted by Owner.
    d. Written permission of property owner and Owner for all other locations.
2. Contractor's use of premises is limited by:
    a. Owner's right to operate and maintain its utility works,
    b. Public use of existing rights-of-way.
    c. Conditions of easements utilized,
    d. Property rights of utilities occupying site,
    e. Property rights of site owner(s), including but not limited to governmental agencies controlling rights-of-way and landowners.
3. Contractor's use of Site shall comply with all regulations of governmental agencies, including but not limited to governmental agencies controlling rights-of-way.
4. Contractor's use of Site shall comply with regulations of utilities with easements impacted by the Work.
5. Owner Occupancy: Allow for Owner occupancy of Project site and use by the public of public areas not immediately occupied by Contractor for the Work.
6. Driveways and Entrances: Keep driveways and entrances serving premises clear and available to Owner, Owner's employees, property owner and residents, and emergency vehicles at all times. Do not use these areas for parking or storage of materials.
    a. Schedule deliveries to minimize use of driveways and entrances.
    b. Schedule deliveries to minimize space and time requirements for storage of materials and equipment on-site.

1.11 PROJECT UTILITY CONNECTIONS AND SERVICES

A. Prior to commissioning, provide all permanent utility connections and services necessary for the proper operation and function of the Project, which may include but not be limited to:

1. Electric power service.
2. Natural gas service.
3. Potable water service.
4. Sanitary sewer service.
5. Telephone service, including both land-line and cellular.
6. Internet.
7. Cable television.

B. Coordinate connections and services.

1. Prepare applications for service required by utilities.
    a. Coordinate with Owner to obtain Owner's signature where required by utility application.
    b. Calculate loads, flows, and other information required to complete utility application based on approved equipment.
    c. Comply with Contract Documents where connection and service requirements are indicated.
    d. Coordinate with Owner for level of service and rate structure where utility offers options.

1.12 OWNER'S OCCUPANCY REQUIREMENTS

A. Owner Occupancy of Completed Areas of Construction: Owner reserves the right to occupy and to place and install equipment in completed portions of the Work, before Substantial Completion, provided such occupancy does not interfere with completion of the Work. Such placement of equipment and partial occupancy shall not constitute acceptance of the total Work.

B. Engineer will prepare a Certificate of Substantial Completion for each specific portion of the Work to be occupied before Owner occupancy.

C. Before partial Owner occupancy, mechanical and electrical systems shall be fully operational, and required tests and inspections shall be successfully completed. On occupancy, Owner will operate and maintain mechanical and electrical systems serving occupied portions of the Work.

D. On occupancy, Owner will assume responsibility for maintenance and custodial service for occupied portions of the Work.

1.13 WORK RESTRICTIONS

A. On-Site Work Hours: Work shall be generally performed during the hours of 7:00 a.m. to 7:00 p.m., Monday through Friday, except otherwise indicated.

1. Weekend Hours:
    a. Saturday: with approval from Town.
    b. Sunday: with approval from Town.
2. Early Morning Hours: No early morning Work will be conducted without Owner's prior written authorization.
3. Hours for Utility Shutdowns: Limit utility shutdowns to 8:00 a.m. to 4:00 p.m. Monday through Thursday.
4. Hours for noisy activity: Limit noisy activities to weekdays from 8:00 a.m. to 5:00 p.m.
5. Nighttime Hours: No nighttime Work will be conducted without Owner's prior written authorization.

B. Existing Utility Interruptions: Do not interrupt utilities, including Owner's utilities, unless permitted under the following conditions and then only after arranging to provide temporary utility services according to requirements indicated:

1. Coordinate all utility interruptions with utility owner.
2. Comply with all utility owner's requirements in the conduct of the utility interruption

3. Do not proceed with utility interruptions without utility owner's written permission.

4. Notify Engineer, Owner, and utility owner not less than two days in advance of proposed utility interruptions. Provide utility owner's written permission with notification.

C. Bypass Pumping

1. The following locations are anticipated to require bypass pumping:

   a. None

2. Bypass pumping may additionally be required at other locations based on Contractor’s means and methods, the progress of the Work, and a variety of other causes.

D. Transition Of Critical Systems

1. The following equipment and systems are critical for the operation of Owner's utility:

   a. None

2. Use exceptional care in the Work to maintain this equipment and systems in operation and reliably transition the operation of this equipment and systems.

   a. Maintain, to the extent possible, the functionality of and ability to revert to existing systems until completion of transition.
   b. Provide adequate time between transition phases to confirm reliable functionality of Work. Equipment and systems shall sequence through complete functional cycle a minimum of five (5) consecutive times without incident or error to confirm reliability.
   c. Provide 2-hour emergency on-site response during the transition period by personnel experienced and knowledgeable in system or equipment being transferred until reliability is confirmed.

1.14 FORMATS AND CONVENTIONS

A. Specification Format:

1. Section Identification: The Specifications use Section numbers and titles to help cross-referencing in the Contract Documents. Sections in the Project Manual are in numeric sequence; however, the sequence is incomplete because all available Section numbers are not used. Consult the table of contents at the beginning of the Project Manual to determine numbers and names of Sections in the Contract Documents.

2. Division 1: Sections in Division 1 govern the execution of the Work of all Sections in the Specifications.

3. Divisions 2 through 16 (Technical Specifications) govern specific portions of the Work.

B. Specification Content: The Specifications use certain conventions for the style of language and the intended meaning of certain terms, words, and phrases when used in particular situations. These conventions are as follows:

1. Implied and Normally Required Work: Any part or item of Work reasonably implied, normally required, or incidental to the Work to make each installation satisfactorily and completely operable is deemed to be included in the Work without additional cost to Owner.

2. Quality of Work: Regard the apparent silence as to any detail as meaning that only the best general practice is to prevail and only materials and workmanship of the best quality are to be used.

3. Abbreviated Language: Language used in the Specifications and other Contract Documents is abbreviated. Words and meanings shall be interpreted as appropriate. Words implied, but not stated, shall be inferred as the sense requires. Singular words shall be interpreted as plural, and plural words shall be interpreted as singular where applicable as the context of the Contract Documents indicates.

4. Imperative mood and streamlined language are generally used in the Specifications. Requirements expressed in the imperative mood are to be performed by Contractor. Occasionally, the indicative or subjunctive mood may be used in the Section Text for clarity to

describe responsibilities that must be fulfilled indirectly by Contractor or by others when so noted.

a. The words "shall," "shall be," or "shall comply with," depending on the context, are implied where a colon (:) is used within a sentence or phrase.

C. Level of Detail: The Contract Documents do not, in general, contain the following information necessary for completion of the Work and are incorporated by reference:

1. Items that are generally known in the construction industry to be necessary to the adequacy or function of the finished project.

2. Items generally known by craftsmen skilled in the trade to be necessary to the adequacy or function of the finished project.

3. Items that are mandatory by code, ordinance or statute.

PART 2 - PRODUCTS (NOT USED)

PART 3 - EXECUTION (NOT USED)

END OF SECTION 01110

01220

Measurement and Payment

SECTION 01220
MEASUREMENT AND PAYMENT

PART 1 - GENERAL

1.1 SUMMARY

A. This Section includes the following:

1. Administrative and procedural requirements for measurement and payment.

B. Related sections include the following:

1. Section 01001 – General Administrative Requirements for information on processing of pay requests and related information.

1.2 DEFINITIONS

A. Lump Sum (LS): The total amount for a defined component, system, or structure of the Project, complete. Lump sum prices may be further allocated based on an approved Schedule of Values.

B. Each (EA): A Unit Price Pay Item for each of several similar or identical defined components or structures of the Project, complete.

C. Pay Item: A specifically described unit of work for which a price is provided in the contract.

D. INDOT SS: Indiana Department of Transportation Standard Specifications.

1.3 SUBMITTALS

A. Action Submittals

1. Submit three (3) signed original copies of Contractor's Application for Payment on forms provided.

B. Informational Submittals

1. Labor Standards Documentation
    a. Certified Payroll for period of pay request.
    b. Other documentation required by the Labor Standards provisions.
2. Stored Materials
    a. Bill of Sale, Invoice, or other documentation warranting the Owner has received the materials and equipment free and clear of all Liens.
    b. If stored off Project site:
        1) Evidence of receipt of materials and equipment by Contractor and that product is suitably stored.
        2) Evidence that the materials and equipment are covered by appropriate property insurance.

1.4 USE CHARGES

A. General: Cost or use charges for temporary facilities shall be included in the Contract Price. Allow other entities to use temporary services and facilities without cost, including, but not limited to, Owner's construction forces, Engineer, occupants of Project, testing agencies, and authorities having jurisdiction.

B. Sewer Service: Pay sewer service use charges for sewer usage by all entities for construction operations where not available from Owner’s existing sewer system.

1. For plant and water storage tankage filling, testing, and startup, sewer service use charges from Owner’s existing sewer system shall be waived for volumes equal to one and one-half of the tank volume. Additional volumes shall be paid at Owner’s standard charges.

C. Water Service: Pay water service use charges for water used by all entities for construction operations where not available from Owner’s existing water system.

1. For plant and water storage tankage filling, testing, and startup, water service use charges from Owner’s existing water system shall be waived for volumes equal to one and one-half of the tank

volume. Additional volumes shall be paid at Owner's standard charges.

D. Electric Power Service: Pay electric power service use charges for electricity used by all entities for construction operations where not available from Owner's existing electric system.

E. Owner's Sewer Service: Sewer service from Owner's existing sewer system, where available, shall be provided to Contractor for use without payment of use charges.

F. Owner's Water Service: Water from Owner's existing water system, where available, shall be provided to Contractor for use without metering and without payment of use charges.

G. Owner's Electric Power Service: Electric power from Owner's existing system, where available, shall be provided to Contractor for use without metering and without payment of use charges.

1.5 PROCEDURES

A. Pay Items include all necessary material, plus cost for delivery, installation, insurance, overhead, and profit.

B. Pay Items include all Work necessary or incidental to the satisfactory completion and commissioning of the facility or structure, including as applicable but not limited to:

1. Management and supervision of the Work
2. Construction engineering
3. Clearing and grubbing
4. Site preparation
5. Sediment and erosion control
6. Dust control
7. Weather protection

8. Temporary fencing, signage, supports, working platforms, and barricades
9. Temporary shoring and structure support
10. Excavation, including rock excavation, unless specifically classified by a pay item
11. Excavation and trench protection
12. Dewatering, unless specifically classified by a pay item
13. Bedding and foundation or trench bottom support
14. Backfill, unless specifically classified by a pay item
15. Unauthorized excavation, as well as remedial work directed by Engineer
16. Utility services and connections
17. Deposits and delivery, fuel, setup, and similar charges
18. Site utilities, including application and connection fees, unless specifically classified as a pay item
19. Site and surface restoration, unless specifically classified by a pay item
20. Testing and commissioning
21. Demonstration and training
22. All other Work not otherwise included as a Pay Item incidental or necessary to the completion of the Work
23. All other Work not otherwise included as a Pay Item incidental or necessary to the completion of the Work

PART 2 - PRODUCTS (NOT USED)

PART 3 - EXECUTION

3.1 LIST OF PAY ITEMS

A. Pay Item No. 1.001 – Mobilization/Demobilization

1. Pay Item Type: Lump Sum.

2. Description: Payment for:

   a. Purchase of required insurance and bonds.
   b. Plan of work and other preliminary project coordination.
   c. Coordination with suppliers and subcontractors.
   d. Coordination with property owners for temporary use of property.
   e. Identification of fill material and disposal sites.
   f. Preliminary construction engineering prior to moving onto project site.
   g. Pre-construction and post-construction audio-video surveys.
   h. Movement of workers and equipment to and from the Site.

3. Unit of Measurement: No measurement.

4. Payment: Mobilization/Demobilization shall not exceed five percent (5%) of the Base Bid.

   a. Bonds and mobilization shall be paid in the amount of sixty percent (60%) of the Pay Item amount with the first Pay Estimate.
   b. Demobilization shall be paid in the amount of forty percent (40%) of the Pay Item amount with the Pay Estimate at Substantial Completion.

B. Pay Item No. 1.002 – Erosion Control

1. Pay Item Type: Lump Sum.

2. Description: Provide erosion control measures as outlined in the project plans during execution of the Work.

3. Unit of Measurement: No measurement.

4. Payment: Payment will be made based on the proportion of time the Erosion Control is provided in relation to the scheduled time adjusted by the progress of the work necessitating Erosion Control, as revised by any change orders.

C. Pay Item No. 1.003 – Maintenance of Traffic

1. Pay Item Type: Lump Sum.

2. Description: Maintenance of Traffic during execution of the Work.

3. Unit of Measurement: No measurement.

4. Payment: Payment will be made based on the proportion of time the Maintenance of Traffic is provided in relation to the scheduled time adjusted by the progress of the work necessitating Maintenance of Traffic, as revised by any change orders.

D. Pay Item No. 1.006 – Dewatering

1. Pay Item Type: Lump Sum.

2. Description: Dewatering of excavations.

3. Unit of Measurement: In accordance with accepted Schedule of Values.

4. Payment: In approximate proportion to the percent of Work completed in accordance with the accepted Schedule of Values.

E. Pay Item No. 1.007 – Field Offices

1. Pay Item Type: Unit Price.

2. Description: Installation, operation and maintenance, and removal of field offices at the Site during execution of the Work.

3. Unit of Measurement: Months, based on dates of occupancy. Portions of months will be pro-rated.

4. Payment: Payment will be made based on the dates of occupancy.

F. Pay Item No. 2.001 – Structure Backfill

1. Pay Item Type: Unit Price.

2. Description: Installation of structure backfill in lieu of soil in utility trenches, classified by:

   a. Utility type.
   b. Pipe size and depth increment, where indicated.

   Pay item does not include structure backfill over water services, sewer laterals, sewer force mains, low pressure sewers, or other pay items in which structure backfill is included in the pay item description.

3. Unit of Measurement: Lineal foot, measured:

   a. For length, by measurement along the centerline of the pipe from end of structure backfill area to end of structure backfill area.
   b. For size, by nominal pipe size.
   c. For depth, by the average segment depth of the utility pipe under the structure backfill.

4. Payment:

   a. Structure Backfill shall be paid in the amount of eighty percent (80%) of the unit price amount upon completion of underlying utility and structure backfill installation.
   b. Structure Backfill shall be paid in the amount of twenty percent (20%) of the unit price amount upon completion of underlying utility testing.

G. Pay Item No. 2.002 – Flowable Backfill

1. Pay Item Type: Unit Price.

2. Description: Installation of flowable backfill in lieu of soil in utility trenches, classified by:

   a. Utility type.
   b. Pipe size and depth increment, where indicated.

3. Unit of Measurement: Lineal foot, measured:

   a. For length, by measurement along the centerline of the pipe from end of flowable backfill area to end of flowable backfill area.
   b. For size, by nominal pipe size.

c. For depth, by the average segment depth of the utility pipe under the flowable backfill.

4. Payment:

a. Structure Backfill shall be paid in the amount of eighty percent (80%) of the unit price amount upon completion of underlying utility and structure backfill installation.

b. Structure Backfill shall be paid in the amount of twenty percent (20%) of the unit price amount upon completion of underlying utility testing.

H. Pay Item No. 3.000 – 1.5 Million Gallon Water Tower and Associated Appurtenances

1. Pay Item Type: Lump Sum.

2. Description: Installation of the New Water Storage Tank and associated appurtenances, including but not limited to design/installation of foundation, design/installation of storage tank, all tank accessories, painting, electrical/telemetry, restoration and all site improvements.

3. Unit of Measurement: In accordance with accepted Schedule of Values.

4. Payment: In approximate proportion to the percent of Work completed in accordance with the accepted Schedule of Values.

I. Pay Item No. 3.001, 3.002, 3.004, 3.005, & 3.007 – Water Mains

1. Pay Item Type: Unit Price.

2. Description: Installation of water mains, classified by:

a. Nominal pipe size.

3. Unit of Measurement: Lineal foot, measured:

a. Along the centerline of the pipe from center to center of fittings.

4. Payment:

a. Water Mains shall be paid in the amount of eighty percent (80%) of the unit price amount upon completion of water main and backfill installation.

b. Water Mains shall be paid in the amount of twenty percent (20%) of the unit price amount upon completion of water main testing.

J. Pay Item No. 3.082, 3.083, 3.085, 3.086, 3.089 – Valves

1. Pay Item Type: Unit Price, each.

2. Description: Installation of water main valves, including valve boxes and appurtenances, classified by:

   a. Valve type.
   b. Valve size.

3. Unit of Measurement: Individual valves.

4. Payment:

   a. Valves shall be paid in the amount of eighty percent (80%) of the unit price amount upon completion of valve and backfill installation.
   b. Valves shall be paid in the amount of twenty percent (20%) of the unit price amount upon completion of water main and valve testing.

K. Pay Item No. 3.100 – Hydrants

1. Pay Item Type: Unit Price, each.

2. Description: Installation of hydrants, classified by type, including connecting tees, leads, lead valves and boxes, restraint, and drain sumps.

3. Unit of Measurement: Individual hydrants.

4. Payment:

   a. Hydrants shall be paid in the amount of eighty percent (80%) of the unit price amount upon completion of hydrant and backfill installation.
   b. Hydrants shall be paid in the amount of twenty percent (20%) of the unit price amount upon completion of water main and hydrant testing.

L. Pay Item No. 3.101 – Hydrant Removal

1. Pay Item Type: Unit Price, each.

2. Description: Removal of hydrants & abandonment of hydrant valve and service.

3. Unit of Measurement: Individual hydrant removals.

4. Payment: Upon successful completion of hydrant abandonment and removal.

M. Pay Item No. 3.121 – Water Main Connections

1. Pay Item Type: Unit Price, each.

2. Description: Installation of water main connections, including valves and fittings where applicable, classified by:

   a. Connection type.
   b. Connection sizes.

3. Unit of Measurement: Individual connections.

4. Payment: Upon completion of installation and successful testing of water main connection.

N. Pay Item No. 3.130 – Line Cap

1. Pay Item Type: Unit Price, each.

2. Description: Installation of water main caps where applicable, classified by:

   a. Cap type.
   b. Cap size.

3. Unit of Measurement: Individual caps.

4. Payment:

   a. Caps shall be paid in the amount of eighty percent (80%) of the unit price amount upon completion of cap and backfill installation.

b. Caps shall be paid in the amount of twenty percent (20%) of the unit price amount upon completion of water main and cap testing.

O. Pay Item No. 3.181 – Plank Tank Control Valve

1. Pay Item Type: Lump Sum.

2. Description: Installation of control valve station, including vault, concrete base pad, valves, fittings, connections, and other appurtenances as specified.

3. Unit of Measurement: In accordance with accepted Schedule of Values.

4. Payment: In approximate proportion to the percent of Work completed in accordance with the accepted Schedule of Values.

P. Pay Item No. 3.182 – Water Fill Station

1. Pay Item Type: Lump Sum.

2. Description: Installation of water fill station, including fill station, electrical and controls, and protective pipe bollards.

3. Unit of Measurement: In accordance with accepted Schedule of Values.

4. Payment: In approximate proportion to the percent of Work completed in accordance with the accepted Schedule of Values.

Q. Pay Item No. 3.183 – Site Demolition

1. Pay Item Type: Lump Sum.

2. Description: Demolition of existing tanks.

3. Unit of Measurement: In accordance with accepted Schedule of Values.

4. Payment: In approximate proportion to the percent of Work completed in accordance with the accepted Schedule of Values.

R. Pay Item No. 3.184 – Obstruction Light

1. Pay Item Type: Lump Sum.

2. Description: Installation of obstruction light on top of tower.

3. Unit of Measurement: In accordance with accepted Schedule of Values.

4. Payment: In approximate proportion to the percent of Work completed in accordance with the accepted Schedule of Values.

S. Pay Item No. 7.001 & 7.003 – Gravity Storm Sewers

1. Pay Item Type: Unit Price.

2. Description: Installation of gravity storm sewers, classified by:

   a. Nominal pipe size.
   b. Average segment depth.

3. Unit of Measurement: Lineal foot, measured:

   a. For length, by measurement along the centerline of the pipe from center to center of manholes or structures adjoining each run.
   b. For average depth, by measuring the difference between the storm sewer pipe invert and finish grade at top of casting at manholes on each end of the pipe run and calculating the average.

4. Payment:

   a. Gravity Storm Sewers shall be paid in the amount of eighty percent (80%) of the unit price amount upon completion of Gravity Storm Sewer and backfill installation.
   b. Gravity Storm Sewers shall be paid in the amount of twenty percent (20%) of the unit price amount upon completion of Gravity Storm Sewer testing.

T. Pay Item No. 7.042 – End Sections

1. Pay Item Type: Unit Price.

2. Description: Installation of culverts and end sections, including bedding, classified by:

   a. material.
   b. nominal pipe size.

3. Unit of Measurement: Individual end sections.

4. Payment: Upon completion of installation of culvert and end section.

U. Pay Item No. 7.048, 7.054, & 7.071 – Storm Sewer Structures

1. Pay Item Type: Unit Price, each.

2. Description: Installation of storm sewer structures, classified by:

   a. Structure type.
   b. Structure depth, where indicated.

3. Unit of Measurement: Individual structures, with depth measured from the sewer invert to the top of casting.

4. Payment: Upon completion of installation of storm sewer structure.

V. Pay Item No. 9.017 – Pavement Removal

1. Pay Item Type: Unit Price.

2. Description: excavation and removal of existing pavement on site and within right-of-way.

3. Unit of Measurement: Square yard.

4. Payment: Upon successful completion of pavement removal.

W. Pay Item No. 9.032 – Pavement Repair (Over Utility)

1. Pay Item Type: Unit Price.

2. Description: Repair of existing roads and drives due to construction of water mains, gravity sanitary sewers, and gravity storm sewers (including gravity storm sewer branch lines), classified by:

   a. Utility type.
   b. Depth increment for gravity sanitary sewers and gravity storm sewers.
   c. Road type and material.

   Pay item does not include pavement repairs over water services, sewer laterals, sewer force mains, low pressure sewers, or other pay

items in which pavement repair are included in the pay item description.

3. Unit of Measurement: Square yard.

4. Payment: Upon completion of installation and successful testing of:

   a. Underlying pipe, and
   b. Pavement repair area.

X. Pay Item No. 9.033 & 9.034 – Heavy Duty HMA or Concrete Pavement

1. Pay Item Type: Unit Price.

2. Description: Installation of pavements from edge to edge, classified by:

   a. Road type and material.

3. Unit of Measurement: Square yard.

4. Payment:

   a. Pavement shall be paid in the amount of eighty percent (80%) of the unit price amount upon completion of underlying pipe and pavement installation.
   b. Pavement shall be paid in the amount of twenty percent (20%) of the unit price amount upon completion of underlying pipe and concrete pavement testing.

Y. Pay Item No. 10.002 – Lawns and Grasses

1. Pay Item Type: Unit Price.

2. Description: Establishment of lawns and grasses at completion of work in an area, categorized by method of establishment.

   Pay item does not include lawns and grasses over water services, sewer laterals, sewer force mains, low pressure sewers, or other pay items in which lawns and grasses are included in the pay item description.

3. Unit of Measurement: Square yards.

4. Payment: Upon acceptable establishment of vegetation.

Z. Pay Item No. 10.020 & 10.021 – Chain Link Fencing and Rolling Gate

1. Pay Item Type: Unit Price.

2. Description: Installation of chain link fencing around the site along with mechanical rolling gate.

3. Unit of Measurement: Lineal foot.

4. Payment: Upon successful completion of fence and gate installation.

3.2 OTHER MATTERS

A. Unauthorized excavation, as well as remedial work directed by Engineer, shall be without additional compensation.

B. Where rock excavation is not specifically included as a pay item, all excavation shall be unclassified.

C. Where rock excavation is a pay item, excavation shall be classified. Rock excavation shall include the removal and satisfactory off-site disposal of rock materials. The Contract Sum will be adjusted for rock excavation according to unit prices included in the Contract Documents. Changes in the Contract time may be authorized for rock excavation.

D. Where underground storage tanks or hazardous environmental conditions are shown or indicated to be removed, the removal and disposal of materials or contents, removal of tanks, assessments, and tank closures shall be without additional compensation where not specifically included as a pay item.

E. INDOT SS: Where INDOT SS are referenced, the intent of the reference is not to incorporate or apply INDOT SS measurement requirements or pay items into these Contract Documents.

F. Overdue or Non-Compliant Submittals

1. Owner will retain 25 percent of the amount due on any pay application during each period in which Contractor fails to submit any of the required submittals or fails to comply with the submittal requirements, as determined by the Engineer.

a. On subsequent pay applications in which the submittal non-conformance continues, the percentage the Owner will retain will be increased for each pay application by the rate of 25 percent per pay application.

2. Retainage for this non-conformance will be released during payment for the next pay application following the date the submittal information is brought back into compliance.

3. Retainage due to this non-conformance shall be in addition to all other retainages.

END OF SECTION 01220

01510

Common Use Field Office

SECTION 01510
COMMON USE FIELD OFFICE

PART 1 - GENERAL

1.1 SUMMARY

A. This Section includes requirements for a common use field office.

B. Related sections include the following:

1. Section 01001 – General Administrative Requirements for locations and installation of temporary facilities, utility hookups, parking areas, and termination and removal of temporary facilities.

1.2 SUBMITTALS

A. Action Submittals

1. Product List

a. List complete furnishings and products in common use field office.

1) Indicate furnishings and products for Engineer's representative office.

B. Informational Submittals

1. Coordination Drawings

a. Site plan showing common use field office, utility hookups, and parking areas for construction personnel.

2. Cleaning

a. Office cleaning schedule.

1.3 SCHEDULING

1. Provide common use field office from time of mobilization of equipment and personnel to site through Substantial Completion, unless otherwise agreed by Engineer.

PART 2 - PRODUCTS

2.1 COMMON USE FIELD OFFICE

A. Field Office, General: Of sufficient size to accommodate needs of construction personnel. Keep office clean and orderly. Furnish and equip offices as follows:

1. Prefabricated or mobile units with serviceable finishes, temperature controls, and foundations adequate for normal loading.

2. Minimum 3 rooms – Engineer's representative room (100 SF minimum), Contractor's general use room, conference room.

3. Heating and cooling equipment necessary to maintain a uniform indoor temperature of 68 to 72 deg F.

4. Lighting fixtures capable of maintaining average illumination of 20 fc at desk height.

5. Furniture required for Project-site documents including file cabinets, plan tables, plan racks, and bookcases.

6. Conference room of sufficient size to accommodate meetings of 10 individuals.

7. Provide electrical power service and 120-V AC duplex receptacles, with not less than 1 receptacle on each wall.

8. Furnish conference room with conference table, chairs, and 4-foot square tack board.

9. Fire extinguishers.

10. Provide weekly interior professional cleaning service.

B. Engineer's Representative Room

1. Furnish Engineer's representative room with desk, chair, sloped plan table, plan rack, trash can, drapes, microwave oven, refrigerator, and one (1) four-drawer fire-rated, locking steel filing cabinet.

2. Locking door(s), keyed separately from other field offices and rooms.

3. Provide a plain paper combination printer/scanner/copier/fax unit in Engineer's representative room.
    a. Provide two sets of color and black print cartridges for the printer/scanner/copier unit.
4. Provide wireless internet service.
    a. Wireless service may be provided if signal strength is adequate to ensure reliable service within Engineer's Representative Room.
5. Temporary parking for a minimum of two (2) vehicles assigned to Engineer.
6. Drinking water and private toilet.
7. Hand washing and toilet supplies.
8. Coffee machine and supplies.

C. Utilities: Provide and pay for utility services, including:
1. Electrical service
2. Internet service
    a. Highest residential-grade speed available locally.
3. Gas service, if required for heating

PART 3 - EXECUTION (NOT USED)

END OF SECTION 01510

01571

Temporary Sediment and Erosion Control

SECTION 01571
TEMPORARY SEDIMENT AND EROSION CONTROL

PART 1 - GENERAL

1.1 SCOPE

A. This section includes the following:

1. Temporary sediment and erosion control along channels, side ditches and around inlets, manholes, and disturbed areas, as applicable.

B. Related sections include:

1. Section 02920 – Lawns and Grasses for permanent seeding requirements.

1.2 SUBMITTALS

A. Action Submittals

1. Product List

2. Product Data

a. temporary seed mixtures,
b. geotextile sediment filters,
c. silt fence,
d. silt fence posts,
e. dust control product.

3. Samples

a. geotextile sediment filters,
b. silt fence.

B. Informational Submittals

1. Submit manufacturer's installation instructions.

1.3 QUALITY ASSURANCE

A. Qualifications

1. Provide certification of compliance upon request.

B. Regulatory Requirements

1. Obtain and pay for permits.

2. Pay costs for certification testing.

1.4 RELATED STANDARDS

A. Indiana statutes 327 IAC-15-1 and 327 IAC-15-5 and all related regulations and standards.

B. Indiana Department of Transportation Standard Specifications (INDOT SS)

1.5 POTENTIAL POLLUTANT SOURCES

A. During construction, there are several pollutant sources that could potentially enter the stormwater systems in the area (i.e., creeks, storm sewers, drainage swales, etc.)

B. Prevent pollutants from entering the existing stormwater facilities in the area:

1. Sediment: Follow the guidelines in this specification to prevent sediment from entering any storm sewer, drainage swale or creek bed.

2. Gasoline/Grease/Oil: Regularly inspect all vehicles and equipment in use on the project. Any item found to be leaking gasoline, grease, oil, or other fluid shall be immediately removed from the Work site and repaired.

3. Trash/Debris: Keep all construction areas free of trash and debris that could leave the site and enter a storm sewer, drainage swale, or creek bed. This shall include keeping the trash and debris out of excavations.

PART 2 - PRODUCTS

2.1 GENERAL

A. In accordance with the INDOT SS.

B. Meet requirements of Indiana Stormwater Quality Manual.

2.2 TEMPORARY SEED

A. Grass Seed: Fresh, clean, dry, new-crop seed complying with AOSA's "Journal of Seed Technology; Rules for Testing Seeds" for purity and germination tolerances.

B. Seed Species: Seed species shall comply with Section 621.06 of the INDOT SS.

1. Sun: Type T seed mixture, applied at a rate of 150 lb/acre.

PART 3 - EXECUTION

3.1 APPLICATIONS

A. Sheet Flow Areas

1. Silt fences and silt fabric filters:
2. Vegetative filter strips,
3. Sandbags,
4. Straw bales, or
5. Rip rap.

B. Concentrated Flow Areas

1. Rip-rap lined channels,
2. Grass-lined channels,
3. Sediment traps,

4. Sediment basins, or

5. Check dams.

C. Storm Water Inlets

1. Sandbags, or

2. Fabric filters.

D. Storm Water Outlets

1. Rock chutes,

2. Rip-rap channels, or

3. other velocity control devices acceptable to Engineer.

E. Grade Stabilization Structures

1. Rip rap,

2. Erosion control mat, or

3. Similar materials acceptable to Engineer.

F. Construction Entrances

1. Minimum of 50-feet in length and 20-feet in width

2. Entrance of compacted subgrade; followed by 6-inches of #2 Crushed Stone, compacted and choked with 10FF; followed by 4-inches of #53 Crushed Stone, compacted

3.2 STORMWATER QUALITY MEASURE IMPLEMENTATION SEQUENCE

A. Before beginning construction in an area:

1. Obtain applicable permits, including submission of a Notice of Intent to IDEM.

2. Mark and protect trees and their associated root zones.

3. Protect designated areas noted on the Drawings.

4. Protect septic tanks and absorption fields with temporary fencing prior to Work to prohibit accidental soil disturbing activities.

5. Install silt fences or other appropriate sheet flow sediment and erosion control systems in areas subject to sheet flow.

6. Install rip-rap lined channels, grass-lined channels, sediment traps, sediment basins, check dams or other appropriate sediment and erosion control systems to capture sedimentation and control erosion in areas subject to concentrated flow.

7. Provide inlet and outlet velocity control devices to avoid the creation of gullies and to prevent damage to the receiving waters.

B. Upon completion of work in an excavation:

1. Immediately backfill and return the area to rough grade elevation.

2. Install traps, silt fences, slope drains, temporary diversions and other runoff control measures, and temporary surface stabilization systems as needed at appropriate locations to keep sediment contained on-site.

3. Do not leave areas unprotected for more than 7 days

C. Immediately after final grading:

1. All temporary sediment and erosion control structures and any unstable sediment around them shall be removed.

2. Install permanent surface stabilization systems or landscape all disturbed sites, including borrow and disposal areas.

3. If weather delays permanent stabilization, temporary seeding and/or mulching will be used as a temporary measure.

D. Where active construction will not take place for 15 working days:

1. Stabilize (using temporary seeding/mulching or other suitable means) all disturbed areas.

E. Work in a stream or drainage swale:

1. Complete Work within 48 hours of the start, unless specific prior written authorization is obtained from Engineer.

2. All materials for erosion control are to be located at the site of the crossing prior to initializing the crossing work.

3. Backfill the excavation as soon as work in the flow line has been completed. Install an erosion control blanket immediately after backfilling.

F. Upon establishment of permanent vegetation and project close-out:

1. Submit Notice of Termination to IDEM, Owner, and other appropriate agencies.

2. Complete all other applicable close-out requirements of all permitting agencies and authorities having jurisdiction.

3.3 INSTALLATION AND MAINTENANCE

A. Install erosion and sediment control items in strict conformance with the manufacturer's instructions. Maintain copy of manufacturer's instructions at the Work site.

B. Inspect sediment and erosion control measures no less often than once per week and after every ½" or greater rainfall event.

C. Silt fences:

1. Follow the contour of the land.

2. Located at least ten (10) feet from the toe of slope to provide a broad, shallow sediment pool.

3. Access to the sediment area shall be provided for sediment clean-out.

D. Dust Control:

1. Prevent wind-borne soil particles that could create a health and/or visibility hazard from leaving the Work sites.

2. Apply an approved dust control product as necessary to prevent a health and/or visibility hazard due to wind-borne particles.

E. Contain excavated material at the Work site within erosion control systems.

F. Immediately remove by brushing or sweeping all mud and sediment tracked or washed onto public roads by the Work. Immediately repair damages to roads which experience broken pavement or other improvements due to these construction activities.

G. The following Erosion Control System Maintenance Schedule shall be used for this project:

Erosion Control System Maintenance Schedule

CONTROL MEASURE	INSPECTION AND MAINTENANCE	INSTALLATION SEQUENCE
Stone Entrance	Inspect weekly. Cleaned and re-shaped as needed for drainage and runoff control. Redressed with clean stone as needed.	Prior to clearing or grubbing
Silt Fence	Inspect weekly. Inspect after Storm Events. Maintain as needed.	Prior to clearing or grubbing
Existing Inlet/Drain Pipe Protection	Inspect weekly. Inspect after Storm Events. Maintain as needed.	Prior to clearing or grubbing
Tree Protection	Inspect weekly. Inspect after Storm Events. Maintain as needed.	Along with Rough Grading
Temporary Seeding	Water as needed	After Rough Grading and/or Within 15 Days of Inactivity
Permanent Seeding	Water as needed	After Finish Grading and/or Within 15 Days of Inactivity
Erosion Control Matting	Inspect weekly. Inspect after Storm Events. Maintain as needed.	After Finish Grading
Inlet Protection	Inspect weekly.	After Each Inlet is Placed

CONTROL MEASURE	INSPECTION AND MAINTENANCE	INSTALLATION SEQUENCE
	Inspect after Storm Events. Maintain as needed.	
Seed, Sod and Landscape Around Inlets Completed	Water as Needed	After Finish Grading Around Finished Inlets
Removal of Inlet Protection	N/A	After All Upstream Areas Are Stabilized
Removal of Silt Fence	N/A	After All Upstream Areas Are Stabilized

H. Maintain an inspection log of all inspections, up to the time that 70% of the permanent cover has been established.

1. Log shall include the name of Contractor's inspector,
2. Location of the inspection,
3. Date of the inspection,
4. Date and amount of the last rainfall, and
5. Description of any findings.

A copy of the log shall be available on-site at all times for review by Engineer.

I. Maintain erosion control systems until 70% cover on permanent seedings.

J. Limit stockpiles of aggregate materials to the amount expected to be used in three (3) days.

1. Maintaining larger stockpiles is discouraged and may require additional controls for adequate protection.
2. Locate on slopes no steeper than 2:1
3. Position a minimum of fifty (50) feet away from storm water conveyances.
4. Silt fencing shall be placed down gradient of stockpiles as necessary to prevent sediment transport.

K. Routine Equipment Maintenance:

1. Conduct at locations that minimize the impact of a potential spill.

2. Conduct within the serviceable area of nearby storm water quality controls and away from storm water conveyances.

3. Check equipment daily for leaks and repair immediately.

4. Provide spill control kits with oil sorbent socks, boom, and mats at all fueling and maintenance areas. Any leakage or spilled oil shall be cleaned up immediately and properly disposed of in accordance with applicable laws.

5. Provide secondary containment for all temporary oil or fuel storage tanks.

3.4 POST CONSTRUCTION REQUIREMENTS

A. Not applicable

END OF SECTION 01571

DIVISION 2

SITE WORK

02000

Town of Chandler Water Main Design and Construction Standards



WATER MAIN DESIGN AND CONSTRUCTION STANDARDS

TOWN OF CHANDLER, INDIANA

Revised Date: October 13, 2022

Prepared by: Beam, Longest and Neff, LLC

Water Main Design and Construction Standards

Adopted October 13, 2022

Tonya Wester, President

Cheryl Amos, Member

Kim Burnett, Member

Sandy Elder, Member

Ron Whitledge, Member

Brian Pace, Clerk Treasurer

TABLE OF CONTENTS

Section 1: Abbreviations and Definitions 1-1
1.1 Abbreviations and Definitions 1-1
1.1.1 Abbreviations 1-1
1.1.2 Definitions 1-1
Section 2: The Development Review Process for Water Main Construction 2-7
2.1 Goals and Objectives 2-7
2.2 General 2-7
2.3 Development Review Process Description 2-8
2.3.1 Preliminary Design Package, Technical Review, and Comments 2-10
2.3.2 Final Design Package, Technical Review, and Final Plan Approval 2-10
2.3.3 State and Federal Permits 2-10
2.3.4 Posting of Bond 2-10
2.3.5 Pre-Construction Coordination 2-11
2.3.6 Construction Inspection and Observation 2-11
2.3.7 Project Acceptance and Dedication 2-12
Section 3: Standard Development Review Forms 3-13
3.1 Development Procedures for Water Main Construction Checklist 3-13
3.2 Chandler Utilities Plan and Specification Review Checklist 3-16
3.3 Application for Water Main Construction 3-19
3.4 Substantial Completion Field Inspection Checklist 3-23
3.5 Letter of Substantial Completion 3-25
3.6 Letter of Final Acceptance 3-28
3.7 Water and Sewer Utility Easement 3-30
Section 4: Water Distribution Facility Design Standards 4-35
4.1 General Requirements 4-35
4.1.1 Specifications 4-35

4.1.2 Permits 4-35
4.1.3 Drafting Standards 4-36
4.2 Water Mains 4-36
4.2.1 General Configuration 4-36
4.2.2 Cul-De-Sac Water Mains 4-36
4.2.3 Dead-End Water Mains 4-37
4.2.4 Easements 4-37
4.2.5 Separation of Water Mains and Sewers 4-37
4.2.6 Design Flows & Pressures 4-38
4.2.7 Testing 4-39
4.2.7.1 Hydrostatic Pressure Testing 4-39
4.2.7.2 Bacteriological Testing 4-41
4.2.8 Special Crossings 4-41
4.2.9 Valves 4-41
4.2.10 Fire Hydrants 4-41
4.3 Water Service Lines 4-42
4.3.1 General Configuration 4-42
4.3.2 Design Flows and Pressures 4-42
4.3.3 Valves 4-43
4.3.4 Meters 4-43
4.3.4.1 Bypass Requirements 4-43
4.3.5 Backflow Prevention 4-44
Section 5: Material Standards for Water Mains 5-45
5.1 General 5-45
5.1.1 Water Mains 5-45
5.1.2 Water Main Fittings 5-46
5.1.3 Tapping and Line Stop Sleeves 5-46
5.1.4 Trenchless Installation 5-47

5.1.4.1 Horizontal Directional Drilling 5-47
5.1.4.2 Jack and Bore 5-47
5.1.5 Water Services 5-48
5.1.6 Valves 5-48
5.1.6.1 Gate Valves 5-48
5.1.6.2 Air/Vacuum Release Valves 5-48
5.1.6.3 Corporation Stops and Curb Stops 5-49
5.1.7 Hydrants 5-49
5.1.8 Appurtenances 5-50
5.1.8.1 Tracer Wire 5-50
5.1.8.2 Valve Boxes 5-50
5.1.8.3 Meter Box Lid and Frame 5-50
5.1.8.4 Valve Vaults 5-50
Section 6: Installation and Construction of Water Mains 6-51
6.1 General 6-51
6.1.1 Safety 6-51
6.1.2 Excavation 6-51
6.1.2.1 Dewatering and Control of Surface Water 6-51
6.1.2.2 Site Preparation 6-51
6.1.2.3 Excavating 6-52
6.1.2.4 Trenching 6-52
6.1.3 Bedding and Backfill 6-53
6.1.3.1 General 6-54
6.1.3.2 Bedding and Backfill Materials 6-54
6.1.3.3 Backfill of Trench Excavations for Pipes and Conduits 6-54
6.1.3.4 Bedding 6-54
6.1.3.5 Backfill Around Pipe 6-55
6.1.4 Installation of Water Mains 6-56

6.1.4.1 General....6-56
6.1.4.2 Installation of Water Mains....6-56
6.1.4.3 Installation of Valves, Valve Boxes, and Structures....6-57
6.1.5 Erosion Control....6-57
6.1.5.1 General....6-57
6.1.6 Horizontal Directional Drilling....6-58
6.1.6.1 General....6-58
6.1.6.2 Installation....6-58
6.1.7 Boring and Jacking Pipe Installations....6-59
6.1.7.1 General....6-59
6.1.7.2 Installation....6-59
Section 7: Standard Details....7-60

TABLE OF FIGURES

Figure 2- 1 Development Review Flow Chart....2-9
Figure 3- 1 Procedures for Water Main Construction Checklist....3-14
Figure 3- 2 Plan and Specification Review Checklist....3-17
Figure 3- 3 Application for Potable Water Construction....3-20
Figure 3- 4 Substantial Completion Field Checklist....3-24
Figure 3- 5 Letter of Substantial Completion....3-26
Figure 3- 6 Letter of Final Acceptance....3-29
Figure 3- 7 Water & Sewer Utility Easement (Permanent)....3-31
Figure 7- 1 Detail 1A Standard Plan Notes....7-61
Figure 7- 2 Detail 1B Standard Plan Notes....7-62
Figure 7- 3 Detail 2 Typical Water Main Trench....7-63
Figure 7- 4 Detail 3 Fire Hydrant Assembly....7-64
Figure 7- 5 Detail 4 Pressure Tapping Detail....7-65
Figure 7- 6 Detail 5 3/4” or 1” Water Service Connection....7-66
Figure 7- 7 Detail 6 2” Water Service Connection....7-67
Figure 7- 8 Detail 7 Standard Valve Box Detail....7-68
Figure 7- 9 Detail 8 Air Relief Assembly....7-69

Figure 7- 10 Detail 9 Typical Restraining for Valves & Reducers 7-70
Figure 7- 11 Detail 10 Typical Offset Assembly 7-71
Figure 7- 12 Detail 11 Restrained Joints Detail 7-72
Figure 7- 13 Detail 12A Standard 3” or Larger Meter Installation Detail 7-73
Figure 7- 14 Detail 12B Standard 3” or Larger Meter Installation Detail 7-74
Figure 7- 15 Detail 13 Blow-Off Valve Detail 7-75
Figure 7- 16 Detail 14 Boring Section & Casing Detail 7-76
Figure 7- 17 Detail 15 Location Marker W/ Tracer Wire Terminal Test Points 7-77

SECTION 1: ABBREVIATIONS AND DEFINITIONS

1.1 Abbreviations and Definitions

For the purposes of this manual, Abbreviations and Definitions shall be interpreted as outlined in this section.

1.1.1 Abbreviations

AHJ	Authority Having Jurisdiction
ANSI	American National Standards Institute ASTM
ASTM	American Society for Testing and Materials
FM	Associated Factory Mutual Laboratories
IDEM	Indiana Department of Environmental ManagementIDNR
INDOT	Indiana Department of TransportationNFPA
OSHA	Occupational Safety and Health Act of 1970SPECS
UL	Underwriter's Laboratories, Inc.

1.1.2 Definitions

Acceptance The formal written acceptance by the Town of Chandler (Town) of an entire project which has been completed in all respects in accordance with the approved Plans, Specifications, and these Standards including any previously approved modifications thereof.

Adequate Public Facilities Facilities determined to be capable of supporting and servicing the physical area and designated intensity of the proposed subdivision as determined by the Town Council based upon specific levels of service.

Backfill Earth and/or other material used to replace material removed from trenches during construction which is above the pipe bedding.

Bedding That portion of the trench backfill which encases the sewer or water pipe to a minimum depth above and below the bell/barrel of the pipe for the purpose of properly supporting the pipe.

Blowoff Assembly An apparatus consisting of a gate valve and restrained section of pipe (same size as the main) brought to the surface and installed at a water main terminus or low point in the line to facilitate line draining and to allow the removal of sediments which accumulate in low areas of the pipeline. Design engineers are encouraged to avoid blowoffs by utilizing fire hydrants.

Building Sewer (lateral) The conduit for transporting waste discharged from the building to the public sewer. The sewer later is considered to be privately owned beginning at the wye or tee fitting at the connection to the public sewer main.

Contractor Any Contractor who meets the Town's requirements and is licensed to enter into contracts for and to perform the work of installing potable water facilities and appurtenances.

Construction Plan The maps or drawings accompanying a subdivision plat, commercial development, or other use showing the specific location and design of improvements to be installed in accordance with the requirements of the Town Council as a condition of the approval of the plat. The construction plans are typically signed and sealed engineering drawings and are included in the contract documents.

County The County of Warrick, State of Indiana

Culvert A closed conduit used for the passage of surface drainage water under a roadway, railroad, canal or other impediment.

Design Criteria Standards that set specific improvement requirements.

Drainage Surface water runoff and the removal of water from land by drains, grading or other means during and after construction or development.

Easement Easements are areas along the line of all public sanitary sewers, storm sewers, and water lines which are outside of dedicated utility or road easements or rights-of-way, and are recorded and dedicated to the Town granting rights along the water line. Easements shall be exclusively for the new water lines. No other easements shall be constructed or encroach upon the easement except with the expressed written approval of the Town.

Elevation A vertical distance above or below a fixed reference level, usually mean sea level. Typically, elevation is reported in feet using the North American Vertical Datum of 1988 (NAVD 88).

Erosion The detachment and movement of soil, sediment or rock fragments usually by water, wind, ice or gravity.

Excavation Removal by any means whatsoever of soil, rock, minerals, mineral substances or organic substances other than vegetation, from water or land on or beneath the land surface thereof, whether exposed or submerged.

Existing Grade or Elevation The vertical location of the ground surface prior to excavating, filling, and other construction operations.

Final Completion The time at which the Work (or a specified part thereof) has progressed to the point where, in the opinion of the Engineer or the Town, the Work (or a specified part thereof) is fully completed, in accordance with the project plans and specifications, all punch list and inspection items have been addressed, surface restoration is complete, and temporary erosion control devices have been removed so that the Town may release final payment, performance bonds, or other securities that remain.

Grade The average level of the finished surface of the ground adjacent to a referenced structure or facility (may also refer to the slope of a roadway along the centerline).

Haunching The area in the trench from the bottom to the spring line of the pipe.

Horizontal Directional Drilling (HDD) Trenchless construction method for installing water main pipe and service lines.

INDOT SS Indiana Department of Transportation Standard Specifications, and applicable supplements, current at the time of construction.

Initial Backfill Backfill placed beside and over pipe in a trench, including haunches to support sides of pipe.

Inspector An agent of the Utility assigned to make detailed inspections of any or all portions of the work and materials. The inspector has full authority to reject materials and/or any portion of the work not supplied and installed in accordance with these Standards or the approved plans and specifications.

Land Disturbing Activity Any manmade change of the land surface including removing vegetative cover, excavating, filling, transporting, and grading.

Local Government The Town Council of the Town of Chandler, the Warrick County Commissioners, Area Planning Commission, County Council, and/or other departments.

Main Extension Extension of the Distribution System that will serve new customers.

Maintenance Guarantee Any security that may be required and accepted by the Town Council to assure that necessary improvements will function as required for a specific period of time.

Manhole A storm or sanitary sewer structure, through which a person may enter to gain access to a storm or sanitary sewer or other enclosed structure. A manhole may also be an inlet for the storm sewer system.

Manufacturer The producer of those materials required by these Standards having direct responsibility and authority for the satisfaction of those minimum material specifications set forth herein.

Monument A permanent marker conforming to the requirements of this Ordinance used to identify the location of a property corner or other survey information.

Non-Residential Subdivision A subdivision whose intended use is other than residential, such as commercial or industrial.

Official Zoning Map The map established by the local government, pursuant to law, showing the streets, highways, parks, drainage systems and setback lines laid out, adopted, and established by law, and any amendments or additions resulting from the approval of subdivision plats by the local government and the subsequent filing of the approved plats.

Off-Site Any premises not located within the area of the property to be subdivided, whether or not in the common ownership of the applicant for subdivision approval.

Other Specifications and Materials Wherever in these Standards other specifications or regulations are mentioned, it shall be understood that the materials and methods mentioned therewith shall conform to all requirements of the latest revision of the specifications so mentioned.

Owner Any individual, partnership, firm, corporation or other entity who, as property owner, is initiating the work.

Pavement That part of a street having an improved surface or brick, paving stone, concrete, or asphalt placed on the surface of the land.

Plans Construction plans, including system maps, sewer plans, and profiles, cross sections, utility plans, detailed drawings, etc., or reproductions thereof, approved or to be approved by the Town Engineer which show location, character, dimensions and details of the work to be done.

Primary Plat The primary drawing or drawings, indicating the proposed layout of the subdivision to be submitted to a town or county Planning Commission for approval.

Products Items purchased for incorporating into the Work. The term "product" includes the terms "material," "equipment," "system," and terms of similar intent.

Professional Engineer A person registered as a professional engineer by the Indiana State Board of Registration for Professional Engineers under IC 25-31.

Project All work to be completed under the Town's permit in accordance with the approved plans, specifications, these Standards and the permit conditions.

Record Drawings (As-Builts) Plans certified, signed and dated by a professional engineer or professional surveyor registered in the State of Indiana, indicating that the Plans have been reviewed and revised, if necessary, to accurately show all as-built construction and installation details including, but not limited to, key elevations, locations, and distances.

Registered Engineer See "Professional Engineer"

Right-of-Way A strip of land occupied or intended to be occupied by a street, crosswalk, railroad, road, electric transmission line, oil or gas pipeline, water main, sanitary or storm sewer main, shade trees, or for any other special use. The usage of the term "right-of-way" for land platting purposes shall mean that every right-of-way hereafter established and shown on a secondary plat is to be separate and distinct from the lots or parcels adjoining such right-of-way and not included within the dimensions or areas of such lots or parcels. Rights-of-way intended for streets, crosswalks, water mains, sanitary sewers, storm drains, shade trees, or any other use involving maintenance by a public agency shall be dedicated to public use by the maker of the plat on which such right-of- way is established.

Sewer A pipe or conduit for carrying wastewater (sanitary sewer) or storm water (storm sewer).

Sidewalk A paved, surfaced, or leveled area, usually parallel to and separate from the street, used as a pedestrian walkway.

Specification A detailed instruction that designates the quality and quantity of materials and workmanship expected in the construction of the project.

Standard Details The drawings of structures, water mains, water service lines, fire hydrants, valves or other devices commonly used and referred to on the Plans and in these Standards.

Standards The Water Main Design and Construction Standards for the Town of Chandler, Indiana as contained herein and all subsequent additions, deletions, or revisions.

Structure Anything constructed or erected which requires permanent location on/in the ground as part of the facilities installed.

Substantial Completion The time at which the Work (or a specified part thereof) has progressed to the point where, in the opinion of the Engineer or the Town, the Work (or a specified part thereof) is sufficiently complete, in accordance with the project plans and

specifications, so that the Work (or a specified part thereof) can be utilized for the purposes for which it is intended. The terms “substantially complete” and “substantially completed” as applied to all or part of the Work refer to Substantial Completion thereof.

Subsurface Drain A tile drain installed for the purpose of lowering the ground water table.

Ten State Standards (Water Works) Recommended Standards for Water Works, latest edition, developed by the Committee of the Great Lakes – Upper Mississippi River Board of State and Provincial Public Health and Environmental Managers.

Town The Town of Chandler, Indiana

Town Engineer Authorized Agent by the Town of Chandler.

Utility The Town of Chandler Utilities Department.

Water Distribution System The collection of water mains interconnected to form a system of pipes, valves, hydrants, and appurtenances that can safely transport potable water from the Town’s treatment facilities to the individual customers’ plumbing throughout the service area.

Work All the work to be done, in accordance with the approved Plans, Specifications, these Standards and permit conditions necessary for the successful completion of the project.

SECTION 2: THE DEVELOPMENT REVIEW PROCESS FOR WATER MAIN CONSTRUCTION

2.1 Goals and Objectives

The Town of Chandler and Chandler Utilities are dedicated to encouraging growth and development. This review process has been implemented in effort to provide clear and concise instructions to builders and investors that do business within the Town of Chandler and the service area of Chandler Utilities.

The goals and objectives of this document are listed below.

- Encourage a stronger local economy.
- Clearly define and streamline a review and permitting process.
- Establish expectations of contractors, builders, and developers.
- Provide standard forms, documents, and details for use by developers, contractors, and engineers.
- Outline the preferred brands, models, and configurations of water mains and water main appurtenances of Chandler Utilities.
- Outline typical construction procedures.

Deviations from these standards may be approved by Chandler Utilities when proper justification is provided and approved.

Chandler Utilities is committed to unparalleled customer service through compliance with these standards, short project review timeframes, and consistent communication. All developers and contractors that construct water mains within the Town of Chandler or service area of Chandler Utilities are expected to follow the procedures and processes of this manual.

2.2 General

The Town of Chandler and Chandler Utilities are responsible for providing safe, clear, odorless, and tasteless drinking water to their residents and customers. To provide this service, Chandler Utilities must ensure proper installation and testing of all potable water distribution facilities constructed in or connected to existing facilities within the water service area. All facilities shall be designed and constructed in accordance with these Standards as well as applicable State / Federal regulations. The ordinances for water distribution systems

governing these Standards are available for review at the Town of Chandler Utility Maintenance Facility.

The purpose of these Standards is to define a development review process, clearly communicate the Utility's expectations to potential customers, and establish minimum criteria for the design, installation, and testing of potable water infrastructure. This manual and the associated documents are intended to promote and encourage development within the Chandler Utilities service area. These water main Design and Construction Standards shall have jurisdiction over the entire Chandler Utilities service area, excluding water storage tanks and booster stations, from the point of discharge from the water treatment facility to the point of connection with the building plumbing or meter pit.

Addenda and/or revisions to these Standards may be issued periodically and will be distributed and made available to the public and Contractor at the Utilities Office. Users shall be responsible to keep apprised of any changes and revisions to these Standards.

Any conflicts between these Standards and any applicable State laws shall be superseded by such law. If any conflict arises between these Standards and applicable Town or County Ordinances, the most recently adopted of the two shall prevail. These Standards are approved and adopted by the Town Council, Town of Chandler.

It is the Developer's responsibility to comply with all requirements of the Utility or other authority having jurisdiction (AHJ) if such authority imposes greater requirements. Furthermore, the Developer shall be responsible for procuring all necessary permits and licenses, bonds, pay all charges and fees for acquiring and recording required easements, and giving all notices necessary and incidental to the work.

2.3 Development Review Process Description

Water main construction within the Chandler Utilities service area is typically permitted through a review process directly with the utility. This process is illustrated in the flow chart shown in Figure 2-1.

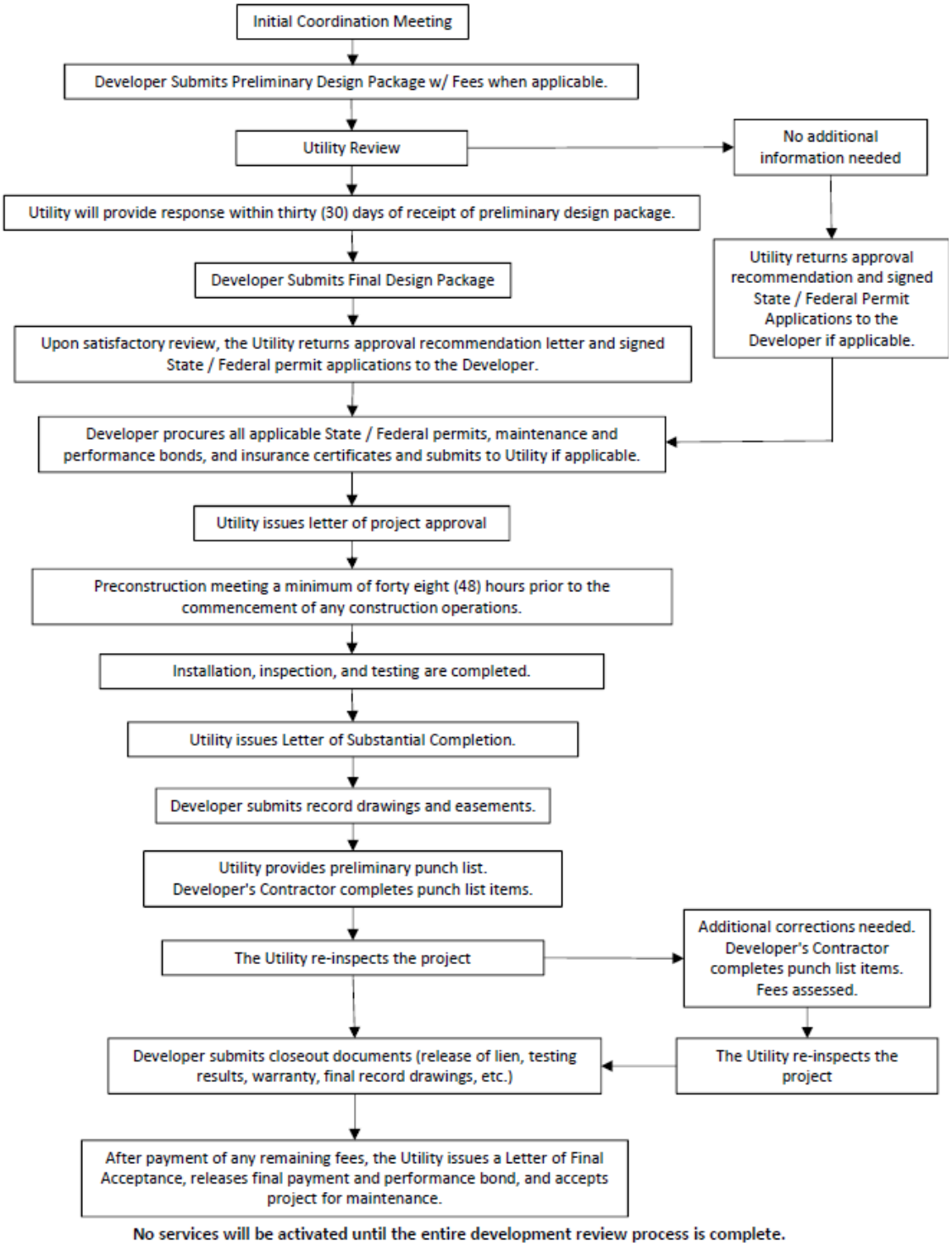

Figure 2- 1 Development Review Flow Chart

2.3.1 Preliminary Design Package, Technical Review, and Comments

The Developer shall submit preliminary design submittal to the Utility for review. This submittal shall include two (2) twenty-four (24) inch by thirty-six (36) inch plan sets signed and sealed by a professional engineer licensed in the State of Indiana, preliminary flow demand calculations, preliminary cost estimate, and all applicable state / federal permit applications.

The Utility shall review the documentation and provide written comments within thirty (30) days of receipt. Written comments shall include, but are not limited to, a letter describing required revisions, a red-lined plan set, and a list of additional items required for submittal with the final design package.

2.3.2 Final Design Package, Technical Review, and Final Plan Approval

The Developer shall address all concerns and comments from the Utility. The Developer shall resubmit final design package to the Utility for review, comment, and approval. This submittal shall include two (2) twenty-four (24) inch by thirty-six (36) inch plan sets signed and sealed by a professional engineer licensed in the State of Indiana, the plan sets in an electronic copy in AutoCAD format, final flow demand calculations, final cost estimate, and any revised state / federal permit applications.

The Utility shall review the documentation for completeness and compliance within thirty (30) days of receipt. Satisfactory submittals shall be approved, and signed state / federal permit applications returned to the Developer. The Utility may elect to issue an additional request for revisions only if initial comments and concerns are not fully addressed.

2.3.3 State and Federal Permits

The Developer shall provide copies of all applicable approved state / federal permits to the Utility prior to construction commencement. These permits may include, but are not limited to, Indiana Department of Environmental Management (IDEM) construction permit, IDEM Section 401, United Stated Army Corps of Engineers (USACE) Section 404, and IDEM Construction General Permit.

2.3.4 Posting of Bond

The Developer may be required to post a performance bond and maintenance bond issued by a company licensed by the State of Indiana to provide such surety. Each bond shall be

equal to 100% of the contract amount or an amount established by the Utility to provide surety for the satisfactory completion of the improvements. The bonds shall name the Town of Chandler as a party who can enforce the obligations included. The duration of each bond shall be one (1) year.

The Utility may, as an alternative to the posting of such bond, accept other appropriate security such as a properly conditioned irrevocable letter of credit which meets the same objective as the bonds described in this section, subject to approval of any other department or agency whose interests are protected by the same bonding requirement. The bank issuing the letter of credit must be a bank situated in Indiana and must be an FDIC insured institution.

If the surety on any bond furnished to the Utility becomes a party to a supervision, liquidation, rehabilitation action pursuant to IC 27-9 et. seq. or its right to do business in the State of Indiana is terminated, it shall be required that, within 30-days thereafter, a substitute bond and surety be provided, both of which must be acceptable to the Utility. Failure to obtain a substitute bond within the stated time frame shall be cause for revocation or suspension of the project approval until such time that the bond is furnished to the Utility.

2.3.5 Pre-Construction Coordination

The Developer shall schedule a preconstruction meeting a minimum of forty-eight (48) hours prior to construction commencement of any water distribution systems. A Utility representative, engineering representative, and contractor are required to attend. At or before this meeting, the Developer shall provide the Utility with two (2) copies of the approved construction plans.

2.3.6 Construction Inspection and Observation

Chandler Utilities provides inspection, observation, and witnessing services for all public water main construction and testing. Basic inspection, observation, and witnessing services include the following:

- Coordination of water service, water meter, and fire hydrant locations.
- Coordination of taps and valves.
- Main line taps (hot taps and cut ins)
- Hydrostatic pressure testing of mains and fire lines up to the building.
- Haunching and backfilling.

Inspection services not listed may result in additional fees required from the Developer. These fees will be assessed at the current hourly rate for Chandler Utilities staff. The Developer's Contractor is expected to be able to install the water mains and appurtenances in accordance with the approved contract documents with only basic inspection services. No action with regard to the Letter of Final Acceptance and release of the performance bond shall be taken until the Developer has reimbursed the Utility in full for any inspection services above and beyond the items listed above. All construction of public works facilities intended for dedication to the Utility shall be observed and certified pursuant to the Permit.

2.3.7 Project Acceptance and Dedication

Water distribution facilities will not be accepted, and final pay request (if needed) will not be issued until all documents, as required by the Utility, are submitted to and approved by the Utility, including the following:

- As-built record drawings showing State Plane Coordinates and elevations to 0.1 foot on all valves and fittings. The Developer's Contractor shall submit two (2) copies of the record drawings and an electronic copy in AutoCAD format to the Utility. Record drawings shall show actual locations (northings and eastings) and depths of water mains, valves/valve boxes, fire hydrants, service taps, curb stops, meter pits and any other underground facilities installed as part of the project, including service line locations and depths.
- Letter of Substantial Completion (if required)
- Preliminary Inspection Report or Punch List (if required)
- Final Inspection Report
- Certified results of all testing that was performed including, but not limited to, hydrostatic pressure testing and bacteriological testing. Testing procedures are detailed in the Water Distribution Facility Design Standards section of this manual and shall be strictly followed. All testing results shall be forwarded to the Chandler Utilities department.
- One (1) Year Warranty
- Release of Lien (if required)
- Recorded Covenant and Easement Documents
- Operating and Maintenance manuals, parts lists, tools, list of products, etc. as applicable.

Upon approval by Chandler Utilities, the final pay request will be authorized, and performance bond released if needed.

SECTION 3: STANDARD DEVELOPMENT REVIEW FORMS

3.1 Development Procedures for Water Main Construction Checklist

CHANDLER UTILITIES

TOWN OF CHANDLER, INDIANA

PROCEDURES FOR WATERMAIN CONSTRUCTION

(CHECK LIST)

Date Received/ Requested	Date Appr./ Sent	
		PROJECT NO.:_____
		PROJECT NAME:_____

_____	_____	1. Initial Coordination meeting including Developer and Utility Representative(s).
_____	_____	2. Developer submits preliminary design package to Utility including application, two (2) 24-inch by 36-inch plan sets, preliminary flow demand calculations, preliminary cost estimate, application fees, and all applicable State / Federalpermit applications.
_____	_____	3. The Utility will review the plans for completeness, conformancewith the Town's standards, and evaluate whether the existing water distribution system can supply the domestic and fire flows needed by this project. The Utility will identify necessary changes to the plans or specifications.
_____	_____	4. The Utility will provide a review letter, red-lined plan set, andlist of additional items required for approval within thirty (30)days of receipt of initial design package.
_____	_____	5. Developer submits final design package to Utility addressing all concerns and comments including two (2) 24-inch by 36-inch plan sets, final flow demand calculations, final cost estimate, and all applicable State / Federal permit applications.
_____	_____	6. The Utility will review the plans for completeness, conformancewith the Town's standards. Upon satisfactory review, the Utilitywill issue recommendation of approval and return signed State / Federal permits to the Developer within thirty (30) days of receipt of final design package.
_____	_____	7. Developer procures all applicable State / Federal permits and transmits to Utility.
_____	_____	8. Developer procures maintenance bond, performance bond (letter of credit or certified check may be accepted on a case bycase basis) and insurance certificates and transmits to Utility.

_____	_____	9. After payment of any additional required fees, the Utility will issue a letter of project approval.
_____	_____	10. Developer schedules and conducts an onsite preconstruction meeting with Contractor, Utility Representative, and Engineer a minimum of twenty-four (24) hours prior to the commencementof any construction operations.
_____	_____	11. Developer completes construction in accordance with the contract documents.
_____	_____	12. Following installation of the water mains, the Developer's Contractor conducts pressure tests and disinfection tests on the new mains. A copy of all test results must be provided to the Town within 2 business days of the completion of the test.
_____	_____	13. The Utility issues a Letter of Substantial Completion.
_____	_____	14. The Developer submits two (2) sets of record drawings (as- builts) drawings (prints and digital) and any easements required for review. Utility will review the easements for approval. The easements must be recorded prior to submittaland based on as-built conditions. Record drawings (as-builts)drawings shall be certified by Surveyor licensed in the State ofIndiana.
_____	_____	15. The Utility's representative prepares a punch list for the project.
_____	_____	16. The Developer's Contractor completes punch list items.
_____	_____	17. The Utility's representative re-inspects the project.
_____	_____	18. Developer submits One Year Warranty, Release of Lien, and Certified Testing Results to the Utility.
_____	_____	19. The Utility accepts maintenance of the project when service is started.
_____	_____	20. After payment of any remaining fees or reimbursable expenses, the Utility issues a Letter of Final Acceptance to theDeveloper.

3.2 Chandler Utilities Plan and Specification Review Checklist

TOWN OF CHANDLER, INDIANA
PLAN & SPECIFICATION REVIEW CHECKLIST

NAME OF PROJECT:_____

DESIGN ENGINEER:_____

I. **Completeness and Conformance with Town Standards**

A. Watermain Pipe & Fittings
   1. Sizes _____
   2. All Watermains Plan and Profile _____
   3. Depth 3' Min to Top of Pipe _____
   4. Pipe Materials _____
   5. Pipe Bedding & Backfill Materials & Construction _____
   6. Jack and Bore _____
   7. Horizontal Directional Drill _____
   8. Details Complete _____
   9. Specs Complete _____
   10. Separation, Horizontal and Vertical

B. Water Service Connections
   1. Sizes _____
   2. Tapping Saddle Type _____
   3. Corporation Stop Type _____
   4. Pipe Materials _____
   5. Curb Stop Type _____
   6. Water Meter Box and Meter Setter _____
   7. Check Valves _____
   8. Details Complete _____
   9. Specs Complete _____

C. Valves _____
   1. Types _____
   2. Spacing
   3. Materials _____
   4. Valve Boxes _____
   5. Air/Vacuum Release Stations _____
   6. Details Complete _____
   7. Specs Complete _____

D. Connections to Existing Water Mains
   1. Details of Connections _____
   2. Existing Water Main Sizes & Materials Indicated _____
   3. Compare Existing Water Mains to Town Water Map _____

E. Other Utility Conflicts
   1. Horizontal Separation of 10' Min to Sewer Lines _____
   2. Vertical Separation of 18" to Sewer Lines _____
   3. Horizontal & Vertical Separation Between Other Utilities _____

F. Miscellaneous
   1. Min. Easement Width 15' _____
   2. Engineer's Seal & Signature _____

3. Page Numbers, Set Complete _____
4. Specs Complete _____
5. North Arrow on Each Street _____
6. Benchmark Indicated on Plans _____
7. Scale Indicated on Plans _____
8. Roads Labeled _____
9. Contours Labeled _____
10. Existing & Final Grade Shown on Profiles _____
11. Check Additional Notes, Details, Spec. Sections _____

II. **Calculations**

A. Design Flow

1. Fire flow conditions _____
2. Max. Day conditions without fire flow _____
3. Average Daily Flow _____

III. Cost Estimate

A. Preliminary and Final

1. Quantities _____
2. Unit Prices _____

PLAN REVIEW DATE: _____

LETTERS SENT: _____

PLANS RESUBMITTED: _____

APPROVAL DATE: _____

3.3 Application for Water Main Construction

APPLICATION FOR POTABLE WATER CONSTRUCTION

Please submit this completed form to Chandler Utilities – 101 Constitution Court, Chandler, Indiana 47610 or maintenance@townofchandler.org with the preliminary design submittal.

* Please be sure to include a .pdf of the construction plans and a copy of the Engineer'sOpinionofProbable Construction Cost.

Date: _____

Project Name: _____

Parcel Number(s): _____

Location: _____

_____

Project Description: Choose all that apply.

Services Potable Water Distribution System Water Main Extension Fire Lines Hydrants

Type of Use:	Number Of Units:	Flow Per Unit	Flow
S/F Residential (Individually Metered Homes/Units)			
M/F Residential (Master-Metered - More than 1 Home/Unit per meter)			
Commercial (Describe on page 2)			
Industrial (Describe on page 2)			
Other (Describe on page 2)			

APPLICATION FOR POTABLE WATER CONSTRUCTION

PROJECT NAME:_____

Further instructions for Commercial, Industrial, Other:

Show a detailed description of water consumption for commercial, industrial, or any other type of developmentby using 327 IAC 3-6-11 guidelines for each meter. Note, the total of these flows should be equal to the Total Average Daily Flow included on the Indiana Department of Environmental Management construction permit applications.

List number and sizes of water meters required for this development. Please include what each meter will serve.

* Please be sure to include a .pdf of the construction plans and a copy of the Engineer's Probable Cost Opinion.

APPLICATION FOR POTABLE WATER CONSTRUCTION

PROJECT NAME:_____

Developer Information:

Name of Developer &/or Owner: _____

Name and Title of Representative: _____

Mailing Address: _____

City, State & Zip: _____

Telephone Number: _____

E-mail Address: _____

Engineer Information:

Name of Engineering Firm: _____

Name of Project Engineer: _____

E-mail Address: _____

Alternate Contact Person: _____

E-mail Address: _____

Mailing Address: _____

City, State & Zip: _____

Telephone Number: _____

3.4 Substantial Completion Field Inspection Checklist

TOWN OF CHANDLER, INDIANA SUBSTANTIAL COMPLETION FIELD CHECKLIST

NAME OF PROJECT: _____

INSPECTOR NAME: _____

CONTRACTOR REPRESENTATIVE: _____

A. Water Main Pipe
1. Size matches plans _____
2. Material matches plans _____
3. 36 inches of cover to top of pipe _____
4. 6 inches of bedding underneath the pipe _____
5. Crushed stone bedding for PVC pipe _____
6. Sand or crushed stone bedding for DIP _____
7. 6 inches of compacted backfill above pipe _____
8. Crushed stone backfill for PVC pipe _____
9. Class I or II backfill for DI pipe _____
10. Granular backfill under and adjacent to roadways _____
11. No stones larger than 3 inches in backfill _____
12. Compaction tests submitted _____
13. Pressure tests submitted _____
14. Chlorination and Bacteriological test submitted _____
15. Adequate vertical separation at crossing _____
16. Adequate horizontal separation from other utilities _____
17. Restrained joints at tees, bends, plugs, etc. _____

B. Valves
1. Valve boxes installed at grade _____
2. Valves open _____
3. Valve keys provided _____
4. Tracer wire brought to surface _____
5. Air release valves at high points _____
6. Blowoff assemblies are size on size _____
7. Blowoff assemblies 2’ above grade _____

C. Services
1. Copper or polyethylene _____
2. Corp Stop at 22 degrees _____
3. Meter pit at grade _____

F. Miscellaneous
1. Fire Hydrant location acceptable _____
2. Fire Hydrant valve open _____
3. Granular bedding below hydrant _____
4. Restrained joints or thrust blocks at hydrant _____
5. _____
6. _____
7. _____
8. _____
9. _____

3.5 Letter of Substantial Completion

TOWN OF CHANDLER, INDIANA

LETTER OF SUBSTANTIAL COMPLETION

OWNER's Project No.: _____ **CONTRACTOR's Project No.:** _____

Project: _____

CONTRACTOR: _____

OWNER: _____

Contract Date: _____

The Work performed under this Contract has been reviewed and found, to the best knowledge of the Town of Chandler or the Town representative to be substantially complete. Substantial Completion is the stage in the progress of the Work when the Work or designated portion is sufficiently complete in accordance with the Contract Documents so that the Owner can occupy or utilize the Work for its intended use. The date of Substantial Completion of the Project or portion designated above is the date of issuance established by this Certificate, which is also the date of commencement of applicablewarranties required by the Contract Documents, except as stated below:

_____

ENGINEER BY DATE

A list of items to be completed or corrected is attached hereto. The failure to include any items on suchlist does not alter the responsibility of the Contractor to complete all Work in accordance with the Contract Documents. Unless otherwise agreed to in writing, the date of commencement of warranties for items on the attached list will be the date of issuance of the final Certificate of Payment or the date of final payment.

Cost estimate of Work that is incomplete or defective: $ _____

The Contractor will complete or correct the Work on the list of items attached hereto within( ) days from the above date of Substantial Completion.

The responsibilities of the Owner and Contractor for operation, safety, maintenance, insurance, warranties, guarantees, and damage to the Work shall be as follows:

RESPONSIBILITIES:

OWNER: _____

CONTRACTOR: _____

_____

CONTRACTOR BY DATE

The Contractor accepts this Letter of Substantial Completion.

_____

OWNER BY DATE

The Owner accepts this Letter of Substantially Completion and will assume full possession at (time) on (date).

3.6 Letter of Final Acceptance

TOWN OF CHANDLER, INDIANA
LETTER OF FINAL ACCEPTANCE

OWNER's Project No.: _____ **CONTRACTOR's Project No.:** _____

Project: _____

CONTRACTOR: _____

OWNER: _____

Contract Date: _____

The Work performed under this Contract has been reviewed and found to be complete in accordance with the terms and conditions of the contract documents. The entire remaining balance of the contractis due and payable. The following items have been completed and accepted.

- ☐ Contractor's Final Pay Request Form is attached.
- ☐ All Punch List Items are complete and accepted.
- ☐ Letter of Substantial Completion has been issued by the Engineer.
- ☐ Record Drawings (as-builts) have been received, reviewed, and approved by theOwner.
- ☐ One-Year Warranty has been received by the Owner.
- ☐ Release of Lien has been received by the Owner.
- ☐ Certified pressure testing results have been received by the Owner.
- ☐ Certified bacteriological testing results have been received by the Owner.
- ☐ Required easements have been accepted by the Owner and recorded.
- ☐ Operating Manual, Parts List, Lists of Products, Maintenance Manuals, Operating Tools and Devices, Maintenance Materials, Extra Parts, etc. as required under thecontract, have been accomplished.

CONTRACTOR BY DATE

The Contractor accepts this Letter of Final Acceptance.

OWNER BY DATE

The Owner accepts this Letter of Final Acceptance and agrees to release final payment and performance bond.

3.7 Water and Sewer Utility Easement

Deed Cross Reference:

Parcel No:

CHANDLER UTILITIES
TOWN OF CHANDLER, INDIANA

WATER & SEWER UTILITY EASEMENT (PERMANENT)

THIS INDENTURE WITNESSETH, that_____(whether one or more, "Grantor"), for and in consideration of the sum of_____Dollars ($), and other valuable consideration, the receipt of which is hereby acknowledged, does hereby GRANT and CONVEY UNTO **THE TOWN OF CHANDLER, INDIANA, FOR THE USE AND BENEFIT OF CHANDLER UTILITIES** ("Utility") whose principal place of business is 401 E. Lincoln Avenue, Chandler, Indiana, its successors, assigns, and lessees, a permanent and perpetual water and sewer utility easement and right-of-way over, under, along, across, within, upon and through the Easement Area defined below and described herein, for the purpose of granting and facilitating the right to lay, construct, reconstruct, inspect, maintain, operate, repair, alter, relocate, enlarge, rebuild, remove, and/or abandon in place one or more pipe lines, transmission media, and all appurtenant and related equipment and structures, whether above or below the surface of the lands of Grantor, convenient or necessary to transport and otherwise handle water and sewerage, and perform and facilitate such utility services over, under, along, across, within, upon and through the Easement Area, together with the right of uninterrupted ingress and egress upon, over, and across the the lands of Grantor to and from said Easement Area, in the exercise of the rights herein granted.

The real estate of Grantor under, along, across, within, upon and through which said easement and right-of-way shall be laid out and located is more particularly described in the attached **Exhibit "A"** and depicted upon the Right of Way Parcel Plat attached hereto in the attached **Exhibit "B"**, both of which exhibits are made a part hereof ("Easement Area").

Grantor for the same consideration further grants to the Utility the right to trim or remove any trees, brush, undergrowth or other obstructions from said easement and right-of-way, if necessary, in the exercise of the rights and privileges herein granted.

Subject to the rights herein granted to the Utility, Grantor reserves the right to use and enjoy the land included with the easement and right-of-way in any way that is not inconsistent with the easement granted hereby, but (i) no buildings, structures, fences, or any other type of improvement or property, either of a permanent or temporary nature, shall be located or maintained on or about the Easement Area, (ii) no excavating or grading shall be done within said Easement Area, which would reduce the coverage of soil over said pipe line or increase the coverage more than three (3)

feet, and (iii) no lake or pond shall be constructed within fifteen (15) feet of either side of said Easement Area measured from the top edge of the bank of any such lake or pond.

Grantor represents and warrants that Grantor is the fee owner of the real estate burdened by the easement granted herein. The easement herein granted is subject to all prior grants, reservations and restrictions of record. The covenants and agreements herein contained and set forth as pertains to this easement as granted herein shall for all purposes be construed and considered as covenants and agreements running with the title to the real estate upon which the Easement Area is situated in favor of the Utility, its successors and assigns, and shall be binding upon the parties hereto and their respective successors and assigns. Grantor acknowledges and agrees that the Utility may freely assign its rights under this instrument without the prior consent of or notice to Grantor and the easement created hereby shall not be affected by any such assignment or any subsequent reassignment.

No failure by the Utility to insist upon strict performance of any term, provision, covenant, or agreement contained in this instrument, nor failure by the Utility to exercise any right or remedy under this instrument shall constitute a waiver of any such term, provision, covenant, or agreement, or a waiver of any such right or remedy, or a waiver of any such default.

From time to time after execution of this instrument, upon the reasonable request of the Utility, Grantor shall execute and deliver or cause to be executed and delivered such further instruments and agreements and take such further actions, as the Utility reasonably request in order to more effectively carry out the terms and conditions of this instrument.

In the event that any of the provisions of this instrument shall be held by a court or other tribunal of competent jurisdiction to be unenforceable, such provision shall be enforced to the fullest extent permissible and the remaining portion of this instrument shall remain in full force and effect. This instrument represents a compromise between the parties and is a product of arms-length negotiations. The parties have read this instrument completely and have had the opportunity to seek the advice and assistance of competent legal counsel. In the event that ambiguity exists or is deemed to exist in any provisions of this instrument, said ambiguity is not to be construed by reference to any doctrine calling for such ambiguity to be construed against the drafter of this instrument. This instrument shall be governed by and construed in accordance with the laws of the State of Indiana, not including the choice of law rules thereof, and each party hereto by execution of this instrument, consents to the exercise of jurisdiction over any matter arising in connection with this instrument in the Superior Court of Warrick County, State of Indiana. As used in this instrument, the plural shall be substituted for the singular, and the singular for the plural, where appropriate; and words and pronouns of any gender shall include any other gender. THIS PROVISION, AND EACH AND EVERY OTHER PROVISION OF THIS INSTRUMENT MAY NOT UNDER ANY CIRCUMSTANCES BE MODIFIED, CHANGED, AMENDED OR PROVISIONS HEREUNDER WAIVED VERBALLY, BUT MAY ONLY BE MODIFIED, CHANGED, AMENDED OR WAIVED BY AN INSTRUMENT IN WRITING EXECUTED BY ALL PARTIES HERETO.

This is a public utility easement and is therefore exempt from the sale disclosure requirement pursuant to I.C. 6-1.1-5.5, et seq.

The above described permanent sewer utility easement is a part of Grantor's property as described in the Office of the Recorder of Warrick County, Indiana.

IN WITNESS WHEREOF, Grantor has executed this Easement as of the_____day of_____, 2021.

By:_____
(signature)

_____
(printed name and title)

STATE OF_____)
) SS:
COUNTY OF_____)

BEFORE ME, a Notary Public in and for said County and State, personally appeared _____, as the_____of_____, who acknowledged the execution of the foregoing instrument and who, having been duly sworn, stated that any representations therein contained are true.

IN WITNESS WHEREOF, the parties have duly executed this instrument, and I have hereunto set my hand and official seal as of the_____day of_____, 2021.

_____
Notary Public

_____
Printed Name

My Commission Expires:
_____

My County of Residence:
_____

This instrument was prepared by Joshua A. Claybourn, **JACKSON KELLY PLLC,** 221 N.W. Fifth Street, P.O. Box 1507, Evansville, IN 47706, Telephone (812) 422-9444

I affirm, under the penalties for perjury, that I have taken reasonable care to redact each Social Security number in this document, unless required by law.

Joshua A. Claybourn

RETURN TO: _____
_____
_____

Exhibit “A”

SECTION 4: WATER DISTRIBUTION FACILITY DESIGN STANDARDS

4.1 General Requirements

All water mains shall be designed in accordance with IDEM, Recommended Standards for Water Works (commonly known as the 'Ten States Standards'), and 327 Indiana Administrative Code (IAC) and these standards. Any variances from these standards must be approved in writing by the Utility prior to the final design submittal. All design drawings used for permit applications, bidding, and construction shall be signed, dated, and sealed by a professional engineer licensed in the State of Indiana.

4.1.1 Specifications

Technical specifications shall be in accordance with IDEM, Recommended Standards for Water Works (commonly known as the 'Ten States Standards'), and 327 Indiana Administrative Code (IAC) and these standards. These specifications shall be prepared using an industry standard naming and number protocol such as the Engineers Joint Contract Documents Committee (EJCDC) or the American Institute of Architecture (AIA). Chandler Utilities does not provide a review of the project specifications. It is the responsibility of the Developer's Engineer to ensure that the specifications match the approved plans and meet regulatory code.

4.1.2 Permits

The Developer shall be responsible for obtaining all permits which relate to the design of the completed facilities. A copy of all permits shall be filed with the Town upon receipt and prior to beginning any work. Permits obtained by the Developer include, but are not limited to, permits from the following:

- Indiana Department of Environmental Management (IDEM)
- Indiana Department of Fire Prevention and Building Safety
- Indiana Department of Natural Resources (IDNR)
- U.S. Army Corps of Engineers
- IDEM Construction Stormwater General Permit (CSGP)
- Applicable County and local permits

4.1.3 Drafting Standards

Design drawings shall be twenty-four (24) inch by thirty-six (36) inch. The scale for plan and profile sheets shall not exceed 1" =30' Horizontal and 1" =5' Vertical. Each sheet shall contain a north arrow and bar scale. Each set of drawings shall also include the applicable detail sheets and construction notes. The design drawings shall be prepared in the current version of AutoCAD software. All design drawings should include the plat and approved addresses.

4.2 Water Mains

4.2.1 General Configuration

The water main configuration shall be designed to provide service to the front of each lot in the development and to the edge of the site being developed where it is likely that future developments will occur, as determined by the Town. In general, the layout of the water mains shall form a grid (sometimes called a looped system) with connections at each street intersection and wherever practical.

All water mains shall be located in a dedicated Water Facility Easement or within the public street right-of-way. Preferably the water main shall be located on the opposite side of the street from the sanitary and storm sewers. Water mains which cross roadways (i.e. streets, highways, etc.), railroads, and other utilities shall preferably do so at ninety (90) degrees whenever practical. The pipe should be designed so that the angle of intersection with the roadway is not to be less than forty-five (45) degrees.

Water mains shall be constructed with joint restraints at all taps, crosses, tees, bends, reducers, and fittings installed per manufacturer's specifications and Chandler Utility details. Thrust blocks are generally not permitted but may be allowed on a case-by-case basis as determined by the Utility.

Water mains and services shall have a minimum cover of thirty-six (36) inches per 327 IAC 8-3.2-17. Generally, water mains shall be eight (8) inches in diameter minimum although smaller sizes may be permitted by Chandler Utilities on a case-by-case basis.

4.2.2 Cul-De-Sac Water Mains

Water mains in cul-de-sacs shall be extended to the end with a fire hydrant at the farthest property line. Cul-de-sac mains shall be a minimum of six inches.

4.2.3 Dead-End Water Mains

In general, dead-end water mains are not permitted. In the event that a dead-end water main is necessary or unavoidable, such as at a future extension of a street, the water main shall terminate with a gate valve downstream of the last potential service line connection (such that closing the valve does not put any customer out of service). This valve shall normally be closed when the water system is in use. Therefore, there must be either sufficient pipe installed downstream of said valve to provide the necessary thrust restraint or a concrete thrust block around the circumference of the pipe making a collar (sometimes called a dead-man restraint or straddle block) and individual joint restraints as needed for the particular situation. Whichever method of thrust restraint is used it shall allow for the connection to the very end of the dead-end water main for future extension without jeopardizing the thrust restraint at the valve in any way or put any customer out of service. Furthermore, a fire hydrant or same size blow off shall be installed at the end of the pipe to facilitate manual flushing when needed. The blow off valve shall consist of a gate valve and box with joint restraint fittings. The blow off piping shall have perforated ¼" openings total area of openings to be not more than one square inch with washed number 5 stone base 18'' around the pip. In the case of a future street extension, the Town of Chandler reserves the right to require the installation of a valve and the same size blow off.

4.2.4 Easements

The minimum width for water facility easements shall be fifteen (15) feet, unless otherwise authorized by the Utility. All water lines shall be centered in the easement unless a sewer (either storm or sanitary) is also present. In that case, a minimum of ten (10) feet separation must be maintained between the water line and the sewer line, and additional easement widths may be required as determined by the Utility.

The easements shall be exclusively under the discretion and control of the Utility. Ingress and egress shall be available to the Utility's crew at all times. No other utility companies are allowed to use the easements for installation of their utility lines without the expressed written permission of Chandler Utilities. All plans' sheets shall clearly identify the existing and proposed easement and the location of all other proposed utilities.

4.2.5 Separation of Water Mains and Sewers

Separation requirements shall comply with 327 IAC 8-3.2-9. Generally, water mains and service lines shall be installed at least ten (10) feet horizontally from any existing or

proposed sewer or lateral. The distance shall be measured edge to edge. In cases where it is not practical to maintain a ten (10) foot separation, the appropriate reviewing agency may allow deviation on a case-by-case basis, if supported by data from the design engineer.

Such deviation may allow installation of the water main or service line closer to a sewer or lateral, provided the water main is in a separate trench or on an undisturbed earth shelf located on one side of the sewer or lateral and at an elevation so the bottom of the water main is at least eighteen (18) inches above the top of the sewer or lateral.

Water main and service lines crossing sewers and laterals shall be installed to provide a minimum vertical distance of eighteen (18) inches between the outside of the water main or service line and the outside of the sewer or lateral. This shall be the case where the water main or service line is either above or below the sewer or lateral. The crossing shall be arranged so that the joints of the water main or service line will be equidistant and as far as possible from the sewer or lateral joints (the pipe shall be centered on the crossing). Generally, the water main shall cross over the sewer pipe. Where a water main or service line crosses under a sewer or lateral, adequate structural support shall be provided for the sewer or lateral to maintain line and grade.

When it is impossible to obtain proper horizontal and vertical separation as stipulated above, one of the following methods must be specified:

- Both the water main and sewer or lateral shall be constructed of ductile iron CL350 mechanical joint pipe complying with public water supply design standards of the agency and be pressure tested to 150 psi to assure water tightness before backfilling.
- The sewer or lateral shall be designed and constructed equal to water pipe and shall be pressure-tested at 150 psi to assure water tightness prior to backfilling.
- Either the water main or service line or the sewer or lateral line may be encased in a watertight carrier pipe which extends ten (10) feet on both sides of the crossing, measured perpendicular to the sewer or lateral. The carrier pipe shall be of materials approved by the regulatory agency for use in water main construction.

Water mains shall not be located closer than ten (10) feet from any existing building structure or foundation or any building set back limit for future building structures.

4.2.6 Design Flows & Pressures

The Utility will provide current flow test(s) information as near to the point(s) of connection between the proposed site and the existing water distribution system as deemed practical

and useful. The Developer's Engineer may rely on this information to design the water mains for the proposed site taking into account the portion(s) of the existing water distribution system between the location of the flow test(s) and the proposed site. The C factor used in the hydraulic calculations (using Hazen-Williams equation) for ductile iron pipes up to five years old shall be 120 and for pipes five to ten years old shall be 115. Ductile (or cast) iron pipes older than ten years shall use a C value of 100.

All water mains shall be sized & looped to provide a min. of thirty-five (35) psi, measured at ground level at the highest proposed elevation within the site, under peak hour flow conditions and a min. of twenty-five (25) psi, same measurement method, under fire flow conditions. If at any point during construction, the water main pressure drops below twenty (20) psi, the Developer's Contractor must immediately contact Chandler Utilities.

Water quantity and the peak hour flow condition shall be determined based on 327 IAC 8-3.3-2.

Commercial and industrial properties shall compute required fire flow in accordance with the ISO Guide for Determination of Needed Fire Flow latest edition.

If these design criteria cannot be met with connections to the existing water distribution, the Utility will use their hydraulic model of the existing distribution system to confirm that assertion and, if valid, the Utility will use the hydraulic model to identify water distribution system reinforcements (i.e. additional pipes, upsizing of existing pipes, etc.) needed to meet these design criteria. The Developer will then be required to design those water distribution system improvements. Those designs must also comply with these standards and in the event, there are issues with such design which are not sufficiently addressed the Utility will provide additional design standards to address the issues at hand.

Furthermore, the Town may require the upsizing of certain sections of the water main to provide sufficient flow to future or existing sites within the Town's water service area. The responsibility for the cost to upsize the water mains shall be negotiated during permitting.

4.2.7 Testing

The required testing for any water main extension is as follows:

- Hydrostatic Pressure Testing
- Bacteriological Testing

4.2.7.1 Hydrostatic Pressure Testing

A. Test procedures shall meet the requirements of ANSI/AWWA C600.

B. Hydrostatic tests shall be performed on all water mains installed. The Contractor shall make arrangements with the Utility for scheduling each test. Each test shall be performed on the day mutually agreed upon and in the presence of the Utility.
C. The Contractor shall furnish any and all equipment, temporary piping, pumps, fittings, gauges and operating personnel necessary to conduct the tests. Water for testing shall be obtained by the Developer or his/her Contractor at no cost to the Utility.
D. The water mains may be tested in sections between valves when there is one or more intermediary valves in a water main.
E. Expel all air from the water main test section during the filling of the main and prior to the application of test pressure. Tap the water main at high points, if necessary, to release all air from the water main. Plug taps after the test is successfully completed. Plugs shall be watertight. Water should be introduced into the main at the lowest point in the line in order to facilitate the expulsion of air from the line.
F. Test water mains at a static pressure of 150 psi over a period of not less than two (2) consecutive hours. The test will be considered successful when the pressure in the water line is maintained within 5 psi of the test pressure throughout the test duration. If the test fails, repair the leaks and repeat the test. Repair leaks and repeat the test until there is no pressure drop. Leakage shall be measured as the quantity of water that must be supplied into the newly laid pipe section to main pressure within 5 psi of the testing pressure.
    a. Allowable leakage for ductile iron pipe shall not be greater than:
    L = SD * P/133,200
        Where:
        L = allowable leakage, in gallons per hour
        S = length of pipe tested, in feet
        D = nominal diameter of the pipe, in inches
        P = average test pressure during the leakage test, in psi
    b. Allowable leakage for PVC pipe shall not be greater than:
    L = ND * P/7,400
        Where:
        L = allowable leakage, in gallons per hour
        N = number of joints in length tested
        D = nominal diameter of the pipe, in inches
        P = average test pressure during the leakage test, in psi

4.2.7.2 Bacteriological Testing

A. The water main shall be tested for bacteriological quality after disinfection and final flushing. Two or more successive sets of bacteriologically satisfactory samples taken at 24-hour intervals must be recorded before the facilities are released for use. Bacteriological testing shall meet the requirements of the applicable regulatory agency. Disinfection shall be repeated if the piping is not bacteriologically acceptable. Repeat disinfection and testing until the mains are approved for service by the applicable regulatory agency.

4.2.8 Special Crossings

Railroads, streams, rivers, etc. are considered special crossings. Special crossings shall be installed in accordance with the AHJ permit such as the USACE, IDNR, IDEM, or the railroad company. The preferred installation method for stream crossings is by horizontal directional drill (HDD) using fusible PVC pipe. HDD installation of restrained joint PVC pipe or High-Density Polyethylene (HDPE) pipe under streams may be permitted in some cases. Special crossings are subject to the separation requirements of Section 4.2.5. Isolation valves shall be located on either side of the crossing outside of the one hundred (100) year floodplain.

In channel disturbance and open cut installation methods through stream, creeks, and rivers is prohibited. Aerial crossings are also prohibited.

4.2.9 Valves

Valves shall be located at the three (3) branches of a tee and at the four (4) branches of a cross fitting. The maximum length of a section of water main to be shutdown is six hundred (600) feet in residential areas and commercial areas per 327 IAC 8-3.2-14. A water main valve shall also be located on the main at fire hydrants on the side of the water main that has the greatest distance to the next in line isolation valve. The spacing in industrial areas will be evaluated, by the Utility, on a case-by-case basis. Air release valves shall be provided at all isolated high points within the system. The contractor shall provide, but not install, a location marker with all valves installed on the project. The location marker shall be a flexible utility marker with two terminal test access points for tracer wire in blue model and shall be installed at a maximum spacing of 1000 feet.

4.2.10 Fire Hydrants

In general, fire hydrants should be located within two hundred (200) feet of a commercial or industrial building and within fifty (50) feet of the Fire Department Connection (FDC). Fire

hydrants should be located at major intersections and shall not exceed average spacing intervals of 500 feet (500') in residential areas, 400 feet (400') in commercial areas, and 350 feet (350') in industrial or other higher risk areas. A fire hydrant shall be provided at all cul-de-sacs. Fire hydrants shall not be connected to a main less than six (6) inches diameter and will maintain three (3) feet of separation from any existing utility. Every fire hydrant shall be installed with a drainage pit of at least one half (1/2) cubic yard of open graded crushed stone.

4.3 Water Service Lines

4.3.1 General Configuration

The water service configuration shall be designed to provide service to the front of each lot in the development with meter box located and centered on the right-of-way line.

Water service line ownership is separated at the meter. Chandler Utilities maintains ownership and maintenance from the water main tap up to and including the double check valve assembly to a point approximately ten inches outside the meter box or the first connection outside the meter box. The property owner is responsible for owning and maintaining the water service line from the downstream side of the double check valve to the structure. Services shall be constructed in manner that minimizes bends, deflections, and excessive depths.

Chandler Utilities may require the developer to install casings / conduits for future water services during the development review process.

4.3.2 Design Flows and Pressures

Design flows for single family homes shall be determined in accordance with 327 IAC 8-3.3-2 which states that the average daily consumer demand for residential service connections is five hundred (500) gallons per day. A peaking factor of two and a half (2.5) shall be used to determine peak demand. Design flow for commercial and industrial developments shall be determined in accordance with Table 2-1 of 327 IAC 8-3.3-2 available online.

Water service lines will be sized to deliver water service at a minimum thirty-five (35) psi. The minimum water service line size shall be three quarters (3/4) of an inch. Bypass lines may be required as determined by the Utility.

4.3.3 Valves

The Developer shall provide valves sufficient to construct, modify, and maintain the water service without disrupting the main or adjacent services. Typical water service lines shall have a corporation stop at the tapping saddle, curb stop at the water meter, shut off or setter, and double check valve on the downstream side of the meter.

Larger residential water services may require additional valves as determined by Chandler Utilities.

4.3.4 Meters

Chandler Utilities will provide and install new water services up to two (2) inches. Namely Chandler Utilities will provide and install the tapping saddle, corporation stop, service line, meter box, meter setter, and meter for these new services. Chandler Utilities will provide meters greater than two (2) inches for new water services. Meters greater than two (2) inches will be installed by the Developer's Contractor. Meters that are three (3) inches or larger require a valve vault upon installation. Chandler Utilities or the Developer's Contractor have the authority to choose when to set new water services. Water services are typically installed to the right-of-way line with the top of the meter box flush with adjacent grade. No meter box is permitted more than three (3) inches above adjacent grade. Water meters shall have 1" to 2" of rock at the bottom of the meter pit. Water service connections that are ¾" or 1" shall have a meter with 16" minimum of cover, and water service connections that are 2" shall have a meter with 36" minimum of cover.

It is the responsibility of the Developer's General Contractor to maintain the integrity of the meter, meter pit, and all adjacent appurtenances once installation is complete. Any damages incurred by these devices shall be the financial responsibility of the Developer's General Contractor. Homeowners are responsible for the integrity of the meter once the project is complete.

4.3.4.1 Bypass Requirements

A bypass around all new meter installations shall be required under any of the following circumstances, where:

- The service line on the outlet side of the meter is two inches (2") or larger. The by-pass for a two (2") meter shall be part of the supplied meter setter. The by-pass for larger services shall be constructed with the vault.

- The water service must not, for any other reason, be interrupted while the meter is being repaired or replaced.

The bypass around the meter shall be furnished and installed by the utility customer according to the Utility's specifications.

Where existing piping not containing a by-pass is altered to meet any of the above conditions, the alteration shall also include the installation of a by-pass.

A bypass around irrigation lines shall not be permitted.

4.3.5 Backflow Prevention

Backflow prevention, also known as cross connection control, shall be provided in accordance with 327 IAC 8-10.Chandler Utilities requires the use of a double check valve assembly on the downstream side of the water meterfor residential applications. Commercial and industrial cross connection control shall be in accordance with Indiana building and plumbing code.

SECTION 5: MATERIAL STANDARDS FOR WATER MAINS

5.1 General

This section provides a list of the materials acceptable for the construction of water distribution facilities. Additional materials and brands may be permitted by the Utility on a case-by-case basis. Hardware for appurtenances and fitting shall be stainless steel or bronze. Galvanized materials are not permitted.

The Town of Chandler and Chandler Utilities prefers the use of domestically manufactured products. All materials provided by developers or contractors must be purchased from a local approved, authorized dealer when possible, refer to the Director of Utilities for approved dealers. Chandler reserves the right to request any information pertaining to the dealers or venders providing the materials. Chandler has the right to refuse any material or equipment submitted for a project.

Projects funded by state and federal grants or loans shall conform to all material manufacturing requirements of the funding agency.

5.1.1 Water Mains

The following materials are acceptable for water mains:

1. Polyvinyl Chloride (PVC)
    a. IPS OD: Pipe sizes shall be from 3” to 12” confirm to ASTM D2241, SDR-21 or SDR-17.
    b. DI OD: Pipes shall conform to AWWA C-900, DR 21 or DR 18.
    c. Typical Accepted Manufacturers
        i. JM Eagle
        ii. Pipelife
        iii. North American Pipe
        iv. Northern
    d. Pipe joints for open cut or boring and jacking shall be push-on flexible gasket compression type conforming to ASTM F477. Pipe joints for horizontal directional drill applications shall be restrained boltless flexible type conforming to ASTM F477 with performance in accordance with ASTM D3139.
2. Ductile Iron (DI) – Pipe shall conform to AWWA C151, Pressure Class 350 in conformance with AWWA C150.

a. Typical Accepted Manufacturers
    i. U.S. Pipe
    ii. McWane
b. Pipe joints for open cut or boring and jacking shall be push-on joints conforming to AWWA C111 or mechanical joints in accordance with AWWA C110 and AWWA C111. Pipe joints for horizontal directional drill applications shall be restrained boltless flexible type.
c. Encasement: Install blue polyethylene encasement on all buried DI pipe and fittings in accordance with AWWA C105.

5.1.2 Water Main Fittings

The following manufacturers and materials are acceptable for water main fittings:

1. DI fittings meeting the requirements of AWWA C110 standard pattern or AWWA C153 compact pattern.
2. Joint Restraints
    a. Typical Accepted Manufacturers
        i. EBAA Iron Series 2000PV
        ii. Ford / Uni-Flange

5.1.3 Tapping and Line Stop Sleeves

The following manufacturers and materials are acceptable for tapping and line stop sleeves:

1. Tapping and line stop sleeves shall be stainless steel and shall be sized to accept full size cutter with an AWWA C207 Class D ANSI 150 lb. drilling flange, corrosion resistant coating and recessed for tapping valve. Sleeve shall include a full circumferential gasket and the entire assembly shall be rated at 150 psi. ¾" of crushed aggregate shall be placed below and around sleeve and should be compacted to 95% of its max density as determined by ASSHTO T-180. Tapping shall be no closer than 18" from the nearest joint.
    a. Typical Accepted Manufacturers
        i. Romac Industries Stainless Steel
        ii. JCM Industries Stainless Steel
2. Tapping valves shall be resilient seated type in conformance with AWWA C509. The tapping sleeve end shall be ANSI B16.1 flanged with centering ring, the outlet side shall be mechanical joint per AWWA C111.

3. Line stops shall utilize the stainless-steel sleeve described in this section. Temporary lines stops shall be Hydro-Stop or equivalent. Completion plug shall be DI per ASTM A536. Cover plate shall be A36 steel with synthetic rubber O-rings and gaskets.
4. Slot-milled inline insertion valves (e.g. EZ Valves or equivalent) may not be used.

5.1.4 Trenchless Installation

Trenchless sections shall have a location marker at each receiving or boring pit.

5.1.4.1 Horizontal Directional Drilling

1. Drilling fluid shall be composed of clean water and appropriate additives such as bentonite clay and polymer admixtures specifically blended for use in drilling.
2. A rig of sufficient capacity to perform the bore and pull back the pipe. The rig shall be hydraulically powered, anchored to the ground, and shall have a system to monitor and record maximum pull-back pressure.
3. A drilling and mixing delivery system of sufficient capacity to successfully complete the drilling and pulling.
4. A steerable drill head with cutting surfaces and drilling fluid jest suitable for each boring application.
5. Dill pipe constructed of high quality 4130 seamless tubing (Grade D or better) with threaded box and pins.
6. A guidance system to accurately guide boring operations.
7. Pipe rollers (if necessary) of sufficient size to fully support the pipe while being hydro-tested.
8. Hydraulic or pneumatic pipe rammers shall not be used.

5.1.4.2 Jack and Bore

1. Casing pipe shall be bituminous coated steel pipe with a minimum wall thickness of 0.375 inches and shall be capable of withstanding traffic or the loads of pavement, subgrade and traffic, where applicable. The casing pipe and joints shall be constructed to prevent leakage of any matter from the casing or conduit throughout its entire length. The casing shall have constant angles around the entire circumference of the pipe with the number of spacers per the manufacturer's specifications.
2. Casing pipe used for railroad crossings shall meet the minimum standards set forth by the railroad involved.

5.1.5 Water Services

The following manufacturers and materials are acceptable for water services:

1. Copper Tubing, Type K or M
    a. Typical Accepted Manufacturers
        i. Mueller Industries
        ii. JB Industries
        iii. Weiland Copper Products
2. Polyethylene (PE) – SDR 9
    a. Typical Accepted Manufacturers
        i. Uponor
        ii. Endot Industries
3. Meter Setters
   Meter setters shall be twelve (12) inches tall with ball valve and double check cartridge.
    a. Typical Accepted Manufacturers
        i. AY McDonald
        ii. Ford
4. Tapping Saddles
   Tapping saddles shall be all brass hinge type.
    a. Typical Accepted Manufacturers
        i. AY McDonald
        ii. Ford

5.1.6 Valves

5.1.6.1 Gate Valves

Gate valves shall be AWWA approved resilient seated, cast iron or ductile iron, with stainless steel stems.

a. Typical Accepted Manufacturer
    i. Mueller
    ii. Clow
    iii. East Jordan

5.1.6.2 Air/Vacuum Release Valves

Air/vacuum release valves shall be automatic hydromechanical, cast iron, and AWWA approved.

a. Typical Accepted Manufacturers

i. Val Matic
ii. Apco

5.1.6.3 Corporation Stops and Curb Stops

Corporation Stops and Cub Stops shall be tapered thread ball valve style and AWWA approved.

a. Typical Accepted Manufacturers
   i. Mueller
   ii. Ford
   iii. AY McDonald

5.1.7 Hydrants

1. Hydrants

Fire Hydrants shall be domestically produced, dry-barrel, compression shut off, traffic model design and shall comply with ANSI/AWWA C502.

Inlets shall be a minimum 6” mechanical joint. Each hydrant shall have two 2-1/2-inch nozzles and one 5-inch Storz connection fitting. The hydrant shall have a positive, non-corrodible type bronzed lined drain valve. When the hydrant is open the drip valve will close the drain and when the hydrant is closed the drain will open. The operating nut and the two 2-1/2-inch caps shall have a 1-1/2 inch pentagon nut. The two 2-1/2 inch caps shall not have chains attached. The 5-inch Storz cap shall have a jacketed stainless-steel cable attaching the cap to the main body of the hydrant.

All hydrants shall open left. Each hydrant shall be buried at the proper depth for the water main to which the hydrant is connected. Hydrants shall be furnished with mechanical joint accessories including bolts, glands, and gaskets. Hydrants shall be placed upon a 4” solid concrete square block at a minimum of 15” by 15”.

All hydrants shall have stainless steel hardware above and below grade including the upper and lower stems. Fire hydrant coatings hall meet the requirements of ANSI/AWWA C502 Fire hydrant coating shall be red.

a. Typical Accepted Manufacturers
   i. Mueller
   ii. Clow
   iii. East Jordan

5.1.8 Appurtenances

5.1.8.1 Tracer Wire

Tracer wire shall be installed on the top of all PVC water mains. Wire shall be minimum of #10 solid copper wire with thermoplastic insulation capable of carrying thirty (30) volts. Two (2) wires shall be used for horizontal directional drill applications.

a. Typical Accepted Manufacturers
    i. Copperhead, or equivalent

5.1.8.2 Valve Boxes

Valve boxes shall be a six (6) inch plastic pipe with a cast iron lid. Valve boxes shall be encased in concrete if it is not in a paved area.

a. Typical Accepted Manufacturers
    i. Carson
    ii. Oldcastle
    iii. Tyler Union
    iv. Sigma

5.1.8.3 Meter Box Lid and Frame

Composite frames and lids shall be manufactured from fiber reinforced polymer (FRP). The frame shall have clear open dimension of 11-3/8-inches and a frame height of 4-inches. The lid shall have a diameter of 12-5/16-inches and a seat thickness of 11/16-inches. The lid shall be blue in color. The lettering on lid shall state “WATER METER.”

a. Typical Accepted Manufacturers
    i. East Jordan

5.1.8.4 Valve Vaults

Valve vaults shall be precast construction and include the following:

1. 4,500 PSI concrete in accordance with ASTM C-913
2. U.S. Foundry (or equal) aluminum hatch 30” x 36”
3. Kor-N-Seal Connectors
4. Cast iron floor drain cast into structure
5. Waterproof butyl mastic sealant on the outside of structure

SECTION 6: INSTALLATION AND CONSTRUCTION OF WATER MAINS

6.1 General

This section shall provide general, minimum requirements for the installation and construction for Chandler Utilities water distribution projects. This installation guidelines can be modified as approved during permitting and construction by Chandler Utilities.

6.1.1 Safety

Neither the Utility, Town, nor its representatives are responsible for safety on the job site. All codes, statutes and regulations relating to safety on the job site shall be followed by the Owner, Developer and Contractor. Direction by the Utility's representative is not designed to assure safety on the job, only that the water distribution system is built according to these standards and the drawings.

6.1.2 Excavation

6.1.2.1 Dewatering and Control of Surface Water

The Developer's Contractor shall make every effort necessary to secure a dry trench bottom before laying pipe. The Contractor shall provide, install and operate sufficient trenches, pumps, hoses, piping, well points, etc. necessary to lower and maintain the groundwater level below the base of the excavation. If the Contractor is unable to remove the standing water in the trench, the Contractor shall over-excavate the proposed bottom grade of the sewer bedding, and place not less than 3 inches of Class No. 8 crushed stone (per INDOT aggregate classification) in the over-excavated area. The Contractor shall make every effort to maintain a work site free of surface water shall install drainage ditches, berms, pumps and perform other work necessary to divert runoff away from excavations. Any water discharged from dewatering operations shall be treated for sediment removal prior to discharge to surface waters. Under no circumstances shall surface water and/or groundwater be discharge to, disposed of, or allowed to flow into the Town's Sanitary Sewer System.

6.1.2.2 Site Preparation

Before the commencement of any excavation, adequate protection shall be provided for all lawns, trees, landscape work, shrubs, fences, utilities, sidewalks, and other objects

that are to remain in place. Such protection shall be maintained for as long as necessary to prevent damage from the Contractor operations.

Moveable items such as mailboxes and roadway signs may be temporarily relocated during construction. Place moveable items in their original location immediately after backfilling is complete. Moveable items damaged during construction shall be replaced with new items at the Contractor's expense.

Strip topsoil and vegetation from the excavated areas. Clean topsoil may be stockpiled for re-use as the upper 6- inches of the area to be seeded. Do not intermix grass, weeds, roots, brush, and stones larger than 1 inch with stockpiled topsoil. Legally dispose of root contaminated topsoil.

Clear and remove logs, stumps, brush, vegetation, rubbish and other perishable matter from the job site. Do not remove or damage trees that do not interfere with the work. Completely remove trees including stumps and roots that are required to be removed.

Remove existing pavement and walks from the areas to be excavated and dispose in a legal manner. Use methods, such as saw cutting, to remove pavement and concrete walks that will assure the breaking or cutting along straight and vertical lines. Remove walks completely where excavation is along the length of a walk to existing joints.

6.1.2.3 Excavating

Excavated materials suitable and necessary for backfilling shall be stored in a neat pile adjacent to the excavation and protected by erosion control measures. Such materials shall not be placed with at a height or proximity to excavation that may endanger the trench sidewalls due to earth slides or cave-ins.

Excavated material not suitable for backfilling and excess suitable material shall be removed from the job site and legally disposed of in a spoil area secured by the Contractor and approved by the Town.

Provide dewatering in accordance with section 6.1.2.1.

6.1.2.4 Trenching

Excavate trenches to a depth and width as required by the pipe manufacturer for proper installation of the pipe and appurtenances. Excavations below the required grade shall be filled with compacted bedding or granular material.

Trenches shall be made as narrow and straight as possible. Sides of trenches shall be kept as near vertical as possible and shall be properly sheeted and/or braced, if

required. The Contractor shall provide adequate sheeting and bracing in open cut trenches to protect life, property and the work. All sheeting, planking, timbering, shoring, bracing, and bridging shall be placed, renewed and maintained, and shall not be removed until sufficient backfill has been placed to protect the pipe. Benching is permitting where sufficient space is available. Benching shall be installed no steeper than two (H) to one (V).

Provide a continuous, uniform bearing support for the pipe on solid undisturbed soil or compact granular fill with trench dished to provide circumferential support to the lower third of each pipe along the entire length of the pipe, including pipe bells.

Rock excavation encountered in the trench and soft material which, in the opinion of the Town is incapable of providing adequate bearing to support the pipe, shall be removed to a depth of 4-inches below the required elevation and filled with compacted No. 8 aggregate.

Do not open more than fifty (50) feet of trench in advance of the installed pipe. Excavate the trench within six.

(6) inches of full depth for a distance of at least thirty (30) feet in advance of the pipe installation.

Maintain one lane of traffic at all streets and service drives during construction. Streets and drives may be closed, and traffic detoured if permission is obtained by the Contractor from the AHJ.

Any sewer, gas, water, or other pipes or conduits crossing the trench shall be supported without damage and without interrupting service. The manner of supporting such pipes or conduits shall be subject to the approval of the Town and/or the utility involved.

Where rock is encountered during trenching operations, the Contractor may remove the rock by mechanical means. The use of a hoe ram breaker is the preferred method of removal. Rock trenchers are also acceptable. Blasting will not be permitted.

No farm fences shall be cut when gates are available within a reasonable distance to move equipment from one field to another.

Provide dewatering in accordance with section 6.1.2.1.

6.1.3 Bedding and Backfill

6.1.3.1 General

All trenches or excavations shall be backfilled to the original surface of the ground or such other grades as required or directed. In general, the backfilling shall be carried along as speedily as possible in order to avoidopen excavation.

6.1.3.2 Bedding and Backfill Materials

Bedding and Backfill material classes referenced within this section shall be defined as follows:

Class I	Angular, 6- to 12.5-millimeters (¼- to ½-inch) graded stone such as crushed stone. A No. 11 gravel possessing a minimum 50% mechanical crush count and meeting the following nominal sizes and percent passing will be considered an equivalent Class I material (100% passing ½-inch sieve; 75-95% passing a ⅜-inch sieve; 10-30% passing No. 4 sieve; and 0-10% passing No. 8 sieve.
Class II	Coarse sands and gravel-sand mixtures with a maximum particle size of 40-millimeters (1½-inches), including variously graded sands and gravels containing small percentages of fine, granular and non-cohesive, either wet or dry. Soil types GW, GP, SW and SP are included in this class (INDOT Classification for Structural Backfill). These materials will not be accepted as pipe bedding.
Class III	This class is defined as fine sand and clay gravels, including fine sands, sand-clay mixtures and gravel-clay mixtures. Soil types GM, GC, SM and SC (ASTM D2487) are included in this class. These materials will not be accepted as pipe bedding.

6.1.3.3 Backfill of Trench Excavations for Pipes and Conduits

Bedding and Backfill materials samples shall be submitted to the Town prior to start of construction.

6.1.3.4 Bedding

1. Plastic PVC Pipe

   Plastic PVC pipe shall be provided with No. 11 crushed stone or approved Class I granular bedding material shovel sliced or otherwise carefully placed and “walked” or hand tamped into place from four (4) to eight (8) inches (based in the diameter of the pipe) below the pipe barrel, to a minimum of twelve (12) inches above the crown of the pipe.

Bedding and initial backfill material shall be hand placed around the haunch and sides of the plastic pipe, to ensure proper compaction filling of all voids. Bedding shall be placed in 6-inch to 8-inch balanced lifts.

2. Ductile Iron Pipe (DI)
   Ductile Iron Pipe (DI) shall be provided with Class I granular bedding material. Class I material shall be shovel sliced or otherwise carefully placed and "walked" or hand tamped into place from three (3) to six (6) inches below the pipe barrel, to three (3) inches above the crown of the pipe.

6.1.3.5 Backfill Around Pipe

Do not backfill trenches until the piping system conforms to the contract documents, this manual, special permit conditions, and are approved by the Utility.

Backfill all trenches within State Highway Right-of-Way in accordance with INDOT SS. Backfill trenches in rights-of-way in accordance with the requirements of the AHJ.

Initial backfill material shall be hand placed around the haunch and sides of PVC or DIP pipe to ensure proper compaction filling of all voids. Initial backfill shall be placed in six (6) to eight (8) inch balanced lifts.

Backfill trenches under and within five (5) feet of all paved roads, drives, paved alleys, sidewalks, curb and gutter with full depth granular Class I or Class II material placed in eight (8) inch layers and mechanically compacted to 95% Standard Proctor Density. Prepare upper portion of the trench for surface restoration or pavement replacement.

Backfill trenches at unpaved driveways and alleys with suitable excavated material up to the last twelve (12) inches which shall be the same material as the original surface. Place backfill in eight (8) inch layers and mechanically compact to 95% Standard Proctor Density. Backfill material shall be Class I or II for PVC pipe. Class I, II, or III backfill is acceptable for DI pipe.

Backfill trenches under sidewalks greater than five (5) feet from roadways with suitable excavated material placed in eight (8) inch layers and compacted to 95% Standard Proctor Density. Backfill material shall be Class I or II for PVC pipe. Class I, II, or III backfill is acceptable for DI pipe.

Backfill trenches in areas not requiring granular fill with suitable excavated material compacted to produce an adequate foundation for seeding. The top four (4) inches of backfill shall not contain stones or other objects larger than one (1) inch. Backfill should be mounded above the finished grade to allow for settlement. Place six (6) inches of

clean topsoil over the area to be seeded. Area to be restored shall be graded subsequent to settlement and immediately before restoration.

Maintain backfilled trenches in a smooth and uniform condition until paving or seeding operations are completed. Contractor shall refill and restore to the original grade any settlement in the backfill which takes place within the one (1) year warranty period at no additional cost to the Town.

Perform compaction tests at all road crossings and at locations of the trench backfill in accordance with the INDOT SS. The Contractor shall be responsible for payment of all compaction tests.

6.1.4 Installation of Water Mains

6.1.4.1 General

The Contractor shall provide all tools, labor and equipment necessary for the safe and expeditious installation of all water mains, water services, and appurtenances.

Inspect water pipe, valves, hydrants, and appurtenances prior to installation and promptly replace damaged or unsuitable materials with new and unused materials.

6.1.4.2 Installation of Water Mains

Water mains shall be constructed in accordance with the contract documents. Generally, water mains shall be laid uniformly to line and grade. The contractor shall set line and grade for all water main construction based on the contract documents. DI and PVC pipe water mains shall be laid progressively upgrade with bell upstream in a manner to construct concentric joints with smooth bottom inverts.

Piping systems shall be temporarily plugged in a watertight manner at the end of each day's work, or other interruption of construction, to prevent entry of animals, fluids, or deleterious material.

Bedding material shall be placed along each side of the installed pipe maintain proper alignment. Bedding shall be in accordance with section 6.1.3 of this manual and any permitted conditions.

Tracer wire shall be installed above newly constructed water mains and appurtenances in accordance with the Utility standard details. All new mains must include tracer wire for use in record drawing preparation.

Installed pipe shall not be backfilled without prior inspection by the Utility. Visual line and ownership indicators may be required.

6.1.4.3 Installation of Valves, Valve Boxes, and Structures

Excavations for valves, vaults, meters, hydrants, and other appurtenances shall be kept free of water during construction. Over excavation below the required depth of the structure shall be backfilled in accordance with section 6.1.3 of this manual and the contract documents. Pipe shall be fully bedded, restrained, and supported prior to installation of valves or structures. Install valves per manufacturer specifications. Unless otherwise noted, castings and covers shall be set at finish grade level in accordance with Utility standard details. The Contractor is responsible for adjusting the casting and cover to the satisfaction of the Chandler Utilities and for ensuring that the valve top is centered.

Remove all debris and excess soil from the structures and boxes after construction and prior to testing and inspection.

6.1.5 Erosion Control

6.1.5.1 General

The Contractor shall be responsible for all temporary and permanent control measures to reduce water pollution, soil erosion, and siltation through the use of berms, dikes, dams, sediment basins, fiber mats, gravel, mulches, grasses, slope drains, and other erosion control devices or methods.

An IDEM Construction Stormwater General Permit (CSGP) must be obtained for projects that disturb one (1) acre or more and provided to Chandler Utilities prior to construction commencement. The Contractor shall comply with all requirements of IDEM CSGP – Storm Water Run-Off Associated with Construction Activity. The Contractor shall be responsible for notifying all agencies and posting all public notices necessary to comply with the CSGP. The following information shall be posted at the project site: Notice of Intent (NOI) letter and NPDES permit number; the name, address, and phone number of the local contact person; and the location of a copy of the construction plans.

Material handling and storage associated with construction activity shall meet the spill prevention and spill response requirements in Indiana Administrative Code 327 IAC 2-6.1.

All erosion control measures shall be maintained throughout the project and until such time as the disturbed area has been completely stabilized or other provisions have altered the need for these measures. All maintenance shall be provided at the Contractor’s expense.

The Utility shall be notified when land disturbing activities have been completed, the entire site has been stabilized and all temporary erosion control measures have been removed. The Developer shall submit a Notice of Termination (NOT) letter to regulating authorities and the Town.

6.1.6 Horizontal Directional Drilling

6.1.6.1 General

1. Notify Utility and Engineer 48 hours prior to drilling operations.
2. Grade or fill work site to provide a level surface only as needed within the designate work areas.
3. Survey entire drill path. Contact all property owner regarding location of service lines, water wells, septic tanks, etc. Contact all utilities for the location of all existing underground lines, cables, pipes, vaults, etc. Excavate and confirm location and elevation of existing utilities in or near drill path.
4. Maintain continuous grade; avoid high spots between air relief valve locations.
5. Maintain erosion control and drilling fluid containment measures throughout the drilling operation.
6. Drilling depths below 8’ shall only be allowed with permission from the Utility.

6.1.6.2 Installation

1. Pilot hole shall be drilled on bore path with not deviations greater than 5% of depth over a length of 100’. Notify Utility and Engineer of drilling fluid fracture or returns loss. Measure the location and depth of the pilot hole and record readings at intervals of no more than 10 feet.
2. Upon successful completion of pilot hole, Contractor shall ream bore hole to a minimum of 25% greater and a maximum of 50% greater than the OD of the pipe or bell. Use hole opener or back reamer suitable for the subsurface conditions. Drilling fluid shall remain in the tunnel during reaming. Deflection limits of the drill pipe shall not exceed the deflection limits of the carrier pipe.
3. Place pipe on rollers before pulling into bore hole. Rollers shall be spaced close enough to prevent sagging. Pipe may be pre-testing prior to pulling, but acceptance testing is still required even if pre-tested. Interior of pipe, fitting, and valves shall be cleaned before being joined.
4. Provide two tracer wires on the crown of all pipe and tubing. Securely fasten with tape at intervals no more than 20 feet.
5. Commence pullback after successfully reaming the hole. Pullback operations must continue without interruption until pipe is completely pulled into bore

hole. If pipe becomes stuck, cease pulling operations to allow potential hydro-lock to subside. Notify Utility and Engineer if pipe remains stuck.

6.1.7 Boring and Jacking Pipe Installations

6.1.7.1 General

1. Field verify utility locations and depths prior to layout.
2. Where not provided by Utility, obtain permits from agencies having jurisdiction over boring and jacking work. Comply with all applicable permit conditions.

6.1.7.2 Installation

1. Provide bore and receiving pits on either end of the casing pipe or where indicated on the Drawings. Pits located in right of way shall be in accordance with the requirements of the agency controlling the right of way.
2. Make surface elevation checks at each established surface elevation point from the bore head to the bore pit each 20’ of progress during the installation. Correct procedure to eliminate surface movement of 0.5 inches or more.
3. Boring shall be performed in a manner that will avoid removal or loss of any earth material from the boring operation which is greater in diameter than the outside diameter of the casing pipe. Do not use water or other liquids to facilitate casing placement or spoil removal.
4. Use a positive stop boring arrangement that will prevent the auger from leading the casing pipe so there will be no unsupported excavation ahead of the pipe.
5. Weld joints of casing pipe as they are installed. Welds shall be watertight and without voids, cracks or other imperfections.
6. Install carrier pipe with spacers/skids at intervals to ensure the pipe does not sag. Pipe bells shall clear the casing by at least ½-inch.
7. Upon completion of jacking operations, pressure grout around outside face of the conduit to fill voids.
8. Seal the ends of the casing pipe with a bulkhead or band. Seals should be adequate to prevent entry of earth into casing pipe due to backfill pressure.

SECTION 7: STANDARD DETAILS

1. ALL WORK SHALL BE IN ACCORDANCE WITH THE CHANDLER UTILITIES RULES AND REGULATIONS.
2. CONTRACTOR SHALL PROVIDE DETAILED SHOP DRAWINGS OF ALL MATERIALS AND PRODUCTS TO CHANDLER UTILITIES PRIOR TO AUTHORIZING SHIPMENT TO THE PROJECT SITE.
3. WATER MAIN TO BE INSTALLED THE WITH MINIMUM COVER OF 36 INCHES..
4. MAINTAIN 18" VERTICAL SEPARATION AND 10' HORIZONTAL SEPARATION FROM EXISTING SEWERS, UNLESS OTHERWISE SHOWN ON THE PLANS.
5. CONTRACTOR IS RESPONSIBLE TO OBTAIN AND VERIFY FIELD LOCATIONS OF ALL KNOWN EXISTING BURIED UTILITIES.
6. CONTRACTOR SHALL NOT ALLOW THE USE OF THE PROPOSED WATER MAINS UNTIL ALL CHLORINATION IS COMPLETE AND MAIN IS ACCEPTED BY UTILITY.
7. CONTRACTOR SHALL COMPLY WITH ALL LOCAL, STATE, AND FEDERAL CODES, ORDINANCES, RULES, REGULATIONS, ORDERS, AND OTHER LEGAL REQUIREMENTS OF MUNICIPAL AUTHORITIES WHICH BEAR ON THE PERFORMANCE OF THE WORK.
8. PVC PIPE MAY BE BENT NO MORE THAN 12.3 INCHES OVER A 20" JOINT. USE FITTINGS AS NECESSARY TO PREVENT OVER-DEFLECTION OF PIPE.
9. ALL RESTRAINED JOINTS PER CHANDLER UTILITIES SPECIFICATIONS.
10. ALL FIRE HYDRANTS TO BE LOCATED SO THAT THEY DO NOT INTERFERE WITH THE SIDEWALK. (WHERE APPLICABLE)
11. THE CONTRACTOR IS CAUTIONED THAT THE LOCATION AND/OR ELEVATION OF EXISTING UTILITIES AS SHOWN ON THESE PLANS IS BASED ON RECORDS OF VARIOUS UTILITY COMPANIES, AND WHERE POSSIBLE MEASUREMENTS TAKEN IN THE FIELD. THE INFORMATION IS NOT TO BE RELIED ON AS BEING EXACT OR COMPLETE. THE CONTRACTOR MUST CONTACT THE APPROPRIATE UTILITY COMPANY AT LEAST 48 HOURS BEFORE ANY EXCAVATION TO REQUEST EXACT FIELD LOCATION OF ESTABLISH ELEVATIONS AND CLEARANCES WITH PROPOSED IMPROVEMENTS PRIOR TO INITIATING CONSTRUCTION.
    INDIANA UNDERGROUND UTILITY LOCATE SERVICE (I.U.P.P.S.)
    PHONE: 811
12. ALL SHORT NIPPLES (16" OR LESS) BETWEEN FITTINGS AND VALVES TO BE DUCTILE IRON PIPE.
13. CONTRACTOR SHALL COORDINATE LOCATION OF TAPS, SERVICE TRANSFERS, CORPORATION STOPS, CURB STOPS, VALVES, AND FIRE HYDRANTS WITH CHANDLER UTILITIES.
14. REQUIRED FITTINGS AND APPURTENANCES MAY NOT BE SHOWN ON DRAWINGS. ALL FITTINGS AND APPURTENANCES REQUIRED TO COMPLETE THE PROJECT ARE TO BE INCLUDED IN THE BID PRICE.
15. IT IS THE RESPONSIBILITY OF THE GENERAL CONTRACTOR TO MAINTAIN THE INTEGRITY OF THE METER PIT AND ALL ADJACENT APPURTENANCES ONCE INSTALLATION IS COMPLETE. ANY DAMAGES INCURRED BY THESE DEVICES SHALL BE THE FINANCIAL RESPONSIBILITY OF THE DEVELOPER'S GENERAL CONTRACTOR. ONCE CONSTRUCTION IS COMPLETE THE INTEGRITY OF THE METER PIT SHALL BE THE RESPONSIBILITY OF THE HOMEOWNER
16. EXISTING UTILITY POLES MAY REQUIRE SUPPORTING DURING CONSTRUCTION. CONTRACTOR SHALL COORDINATE WITH UTILITY RESPONSIBLE FOR POLES TO PROVIDE ADEQUATE SUPPORTING DURING CONSTRUCTION.
17. CONTRACTOR SHALL FIELD VERIFY THE DEPTH OF EXISTING WATER MAINS WHERE THEY WILL BE CROSSED BY NEW WATER MAINS. A MINIMUM OF 12 INCHES OF CLEARANCE SHALL BE MAINTAINED BETWEEN NEW AND EXISTING WATER MAINS WHERE THEY CROSS.

TOWN OF CHANDLER

101 CONSTITUTION COURT. CHANDLER, IN 47610

STANDARD PLAN NOTES

Approved: 07/18/2022	Adopted: 07/18/22	Figure 1A
Approved By: RDC	Scale: N.T.S.	

18. CONTRACTOR SHALL BE RESPONSIBLE FOR STAKING RIGHT-OF-WAY BY REGISTERED LAND SURVEYOR.
19. TWENTY FOUR (24) HOURS PRIOR TO STARTING ANY OF THE WORK, THE CONTRACTOR SHALL MAKE ARRANGEMENTS WITH CHANDLER UTILITIES TO PROVIDE INSPECTION FOR THE WORK.
20. CONTRACTOR SHALL SCHEDULE A PRE-CONSTRUCTION MEETING WITH CHANDLER UTILITIES AND THE DESIGN ENGINEER A MINIMUM OF FORTY-EIGHT (48) HOURS PRIOR TO STARTING ANY WORK.
21. CONTRACTOR IS RESPONSIBLE FOR OBTAINING A CONSTRUCTION STORMWATER GENERAL PERMIT WHERE PROJECT LAND DISTURBANCE EXCEEDS ONE (1) ACRE.
22. CONTRACTOR TO PROTECT AND REPAIR ALL DAMAGED DRAINAGE TILE ENCOUNTERED DURING CONSTRUCTION.
23. CONTRACTOR SHALL HAVE A COPY OF THE CONTRACT DOCUMENTS AND CONSTRUCTION PERMITS ONSITE AT ALL TIMES.
24. WHEN GRADING OPERATION ARE COMPLETE OR SUSPENDED FOR MORE THAN 14 DAYS, PERMANENT GRASS MUST BE ESTABLISHED AT SUFFICIENT DENSITY TO PROVIDE EROSION CONTROL ON SITE. BETWEEN PERMANENT GRASS SEEDING PERIODS, TEMPORARY COVER SHALL BE PROVIDED.
25. ALL FINISHED GRADES IN EXCESS OF 20% SLOPES (5:1) SHALL BE MULCHED AND TACKED AT A RATE OF 100 POUNDS PER 1000 SQUARE FEET WHEN SEEDED.
26. ALL TRENCH BACK FILLS UNDER OR WITHIN 5 FEET OF PAVED AREAS SHALL BE GRANULAR BACK FILL, AND COMPACTED MECHANICALLY. ALL OTHER TRENCH BACK FILLS MAY BE EARTH MATERIAL (FREE OF LARGE CLODS, OR STONES) AND COMPACTED.
27. CONTRACTOR SHALL BE RESPONSIBLE FOR FINAL SITE GRADING, EXCESS SOIL AND SPOIL MATERIAL SHALL BE DISPOSED OF BY THE CONTRACTOR OFF-SITE, AT NO ADDITIONAL COST TO THE OWNER.
28. CONTRACTOR TO REGRADE AREAS AS NECESSARY WITHIN THE CONSTRUCTION LIMITS TO ALLOW PROPER DRAINAGE TO EXISTING AND PROPOSED STORM SEWER STRUCTURES AND DRAINAGE OUTLETS.
29. FINAL GRADES REQUIRE APPROVAL FROM CHANDLER UTILITIES.
30. EXISTING WATER MAIN AND SERVICES SHALL BE PRESERVED AND PROTECTED DURING CONSTRUCTION. SERVICES SHALL REMAIN IN SERVICE UNTIL THE PROPOSED WATER MAIN CONSTRUCTION AND TESTING IS COMPLETE, AT WHICH TIME SERVICES SHALL BE TRANSFERRED. ONCE EXISTING SERVICES ARE TRANSFERRED, EXISTING WATER MAIN MAY BE RETIRED AS APPLICABLE.

EXAMPLE UTILITY CONTACTS:

CHANDLER UTILITIES
101 CONSTITUTION COURT
CHANDLER, IN 47610
(812) 925-6213

TEXAS GAS TRANSMISSION
7935 INDIANA 56
HAZELTON, INDIANA 47640
(812) 354-8836

TIME WARNER - NEWBURGH
PO BOX 21798
OWENSBORO, KENTUCKY 42301
(270) 685-2991

AT&T
5858 NORTH COLLEGE AVENUE
INDIANAPOLIS, INDIANA 46220
(317) 252-4007

BOONEVILLE / CHANDLER NATURAL GAS
1425 NORTH ROCKPORT ROAD
BOONEVILLE, INDIANA 47601
(812) 897-2260

INSIGHT COMMUNICATIONS
1900 NORTH FARES AVENUE
EVANSVILLE, INDIANA 47711
(812) 428-2477

ZAYO BANDWIDTH
625 EAST 11TH STREET
INDIANAPOLIS, INDIANA 46202
(317) 524-5711

VECTREN GAS
1 NORTH MAIN STREET
EVANSVILLE, INDIANA 47702
(812) 491-4607

TOWN OF CHANDLER

101 CONSTITUTION COURT. CHANDLER, IN 47610

STANDARD PLAN NOTES

Approved: 07/18/22	Adopted: 07/18/22	Figure 1B
Approved By: RDC	Scale: N.T.S.	

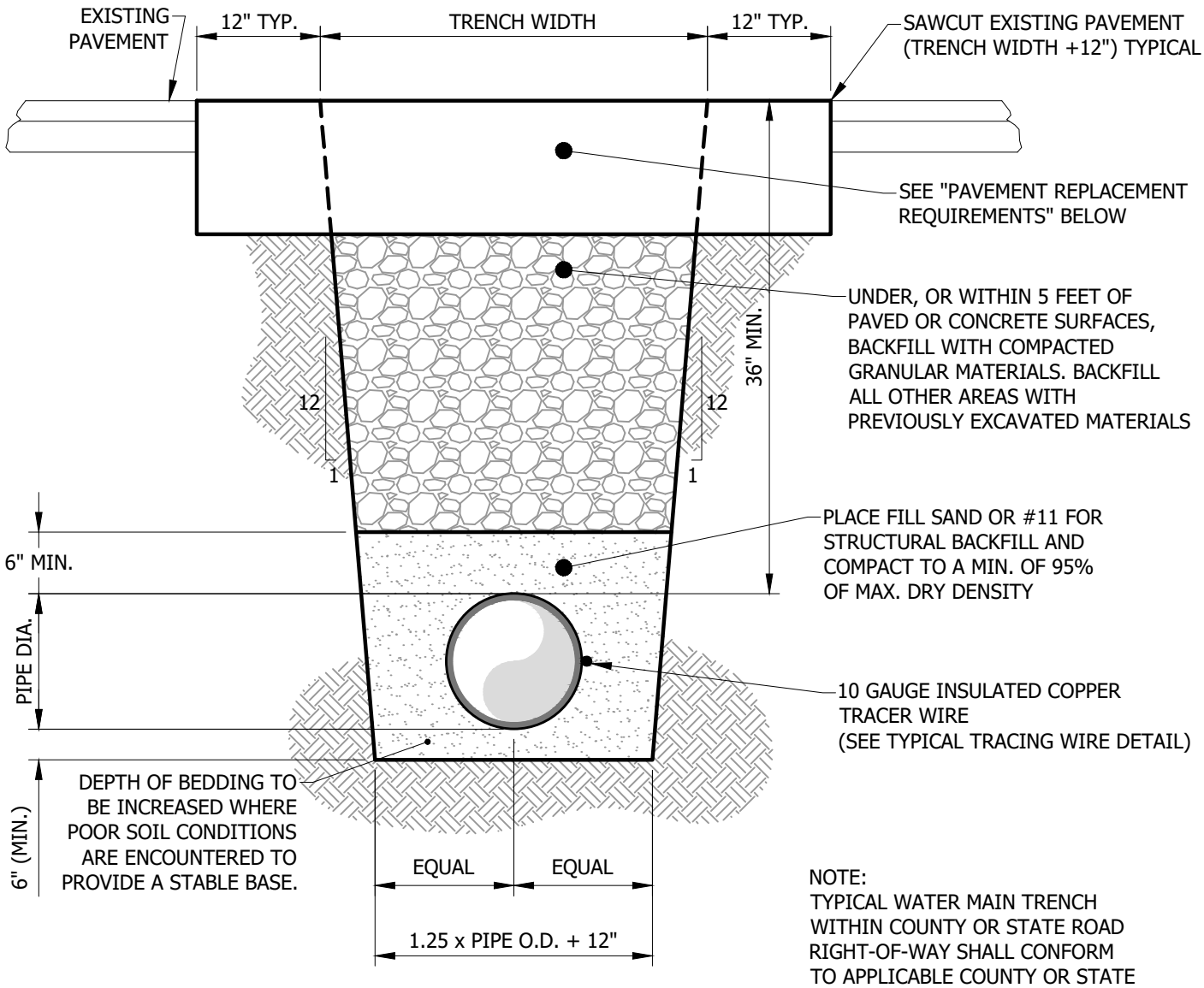

NOTE:
TYPICAL WATER MAIN TRENCH WITHIN COUNTY OR STATE ROAD RIGHT-OF-WAY SHALL CONFORM TO APPLICABLE COUNTY OR STATE SPECIFICATION

PAVEMENT REPLACEMENT REQUIREMENTS	
ASPHALT STREETS (RESIDENTIAL)	660#/SY HMA FOR BASE AND SURFACE
ASPHALT STREETS (COLLECTOR)	880#/SY HMA FOR BASE AND SURFACE
CONCRETE STREETS (RESIDENTIAL)	6" PCCP WITH EXPANSION AND JOINTS TO MATCH EXISTING STREET
CONCRETE STREETS (COLLECTOR)	10" PCCP WITH DOWELS AND EXPANSION AND JOINTS TO MATCH EXISTING STREET

TOWN OF CHANDLER

101 CONSTITUTION COURT. CHANDLER, IN 47610

TYPICAL WATER MAIN TRENCH

Approved: 07/18/22	Adopted: 07/18/22	Figure 2
Approved By: RDC	Scale: N.T.S.	

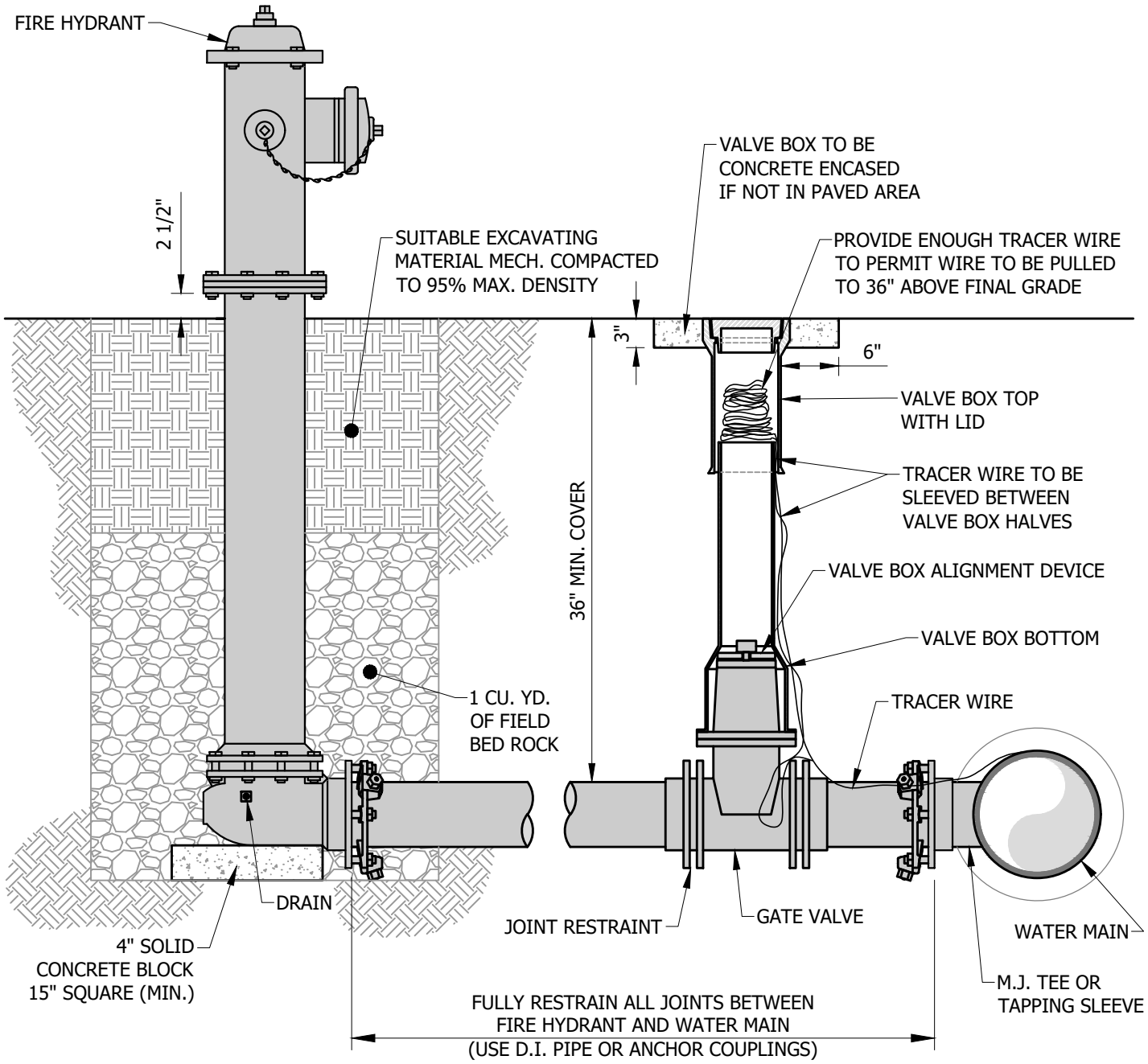

APPROVED HYDRANTS:

- MUELLER
- CLOW
- EAST JORDAN

TOWN OF CHANDLER

101 CONSTITUTION COURT. CHANDLER, IN 47610

FIRE HYDRANT ASSEMBLY

Approved: 07/18/22	Adopted: 07/18/22	Figure 3
Approved By: RDC	Scale: N.T.S.	

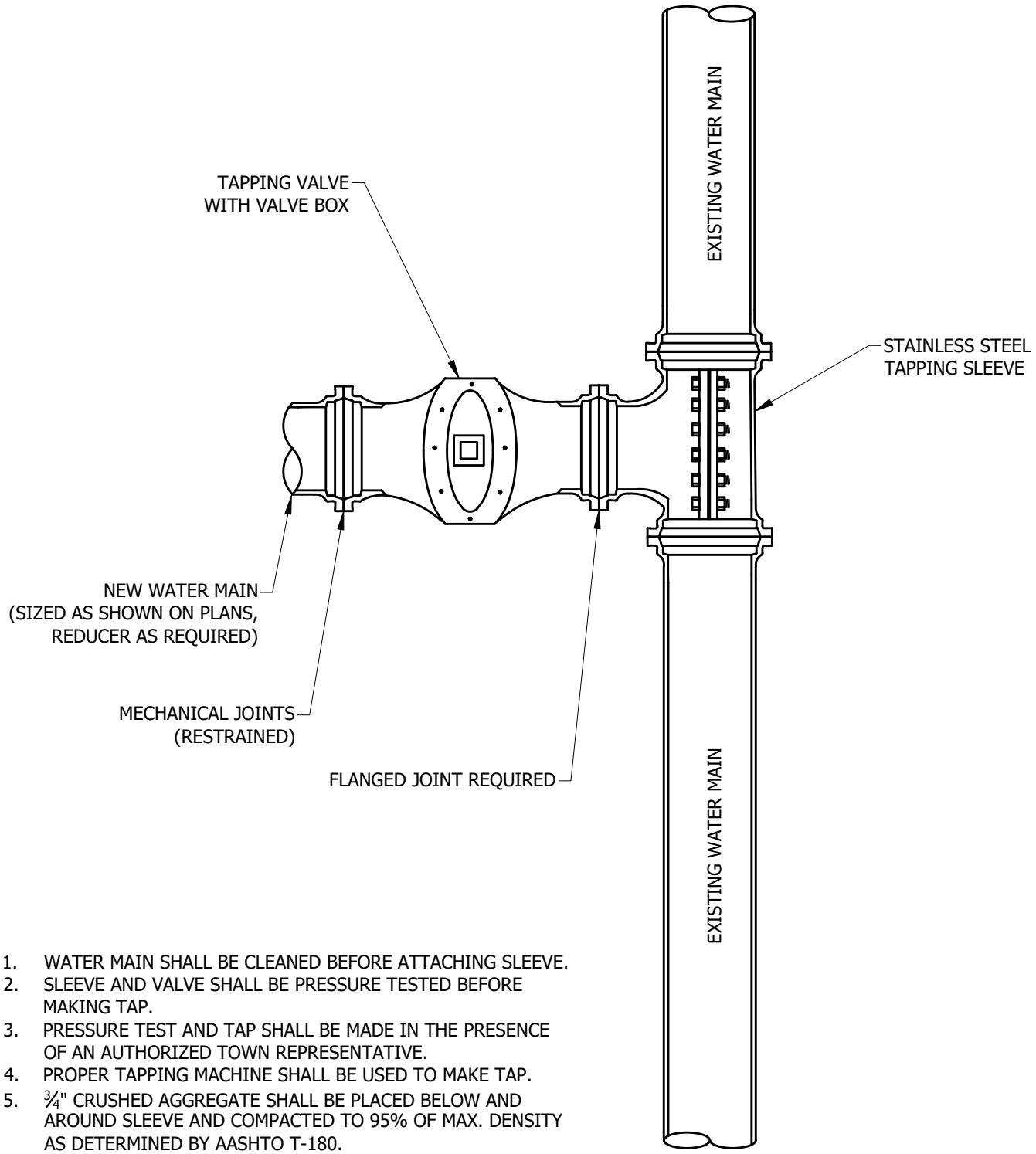

1. WATER MAIN SHALL BE CLEANED BEFORE ATTACHING SLEEVE.
2. SLEEVE AND VALVE SHALL BE PRESSURE TESTED BEFORE MAKING TAP.
3. PRESSURE TEST AND TAP SHALL BE MADE IN THE PRESENCE OF AN AUTHORIZED TOWN REPRESENTATIVE.
4. PROPER TAPPING MACHINE SHALL BE USED TO MAKE TAP.
5. ¾" CRUSHED AGGREGATE SHALL BE PLACED BELOW AND AROUND SLEEVE AND COMPACTED TO 95% OF MAX. DENSITY AS DETERMINED BY AASHTO T-180.
6. TAP SHALL BE MADE NO CLOSER THAN 18" FROM THE NEAREST JOINT.
7. TRENCH TAPPING SLEEVE TO MAIN SHALL BE PLACED

TOWN OF CHANDLER

101 CONSTITUTION COURT. CHANDLER, IN 47610

PRESSURE TAPPING DETAIL

Approved: 07/18/22	Adopted: 07/18/22	Figure 4
Approved By: RDC	Scale: N.T.S.	

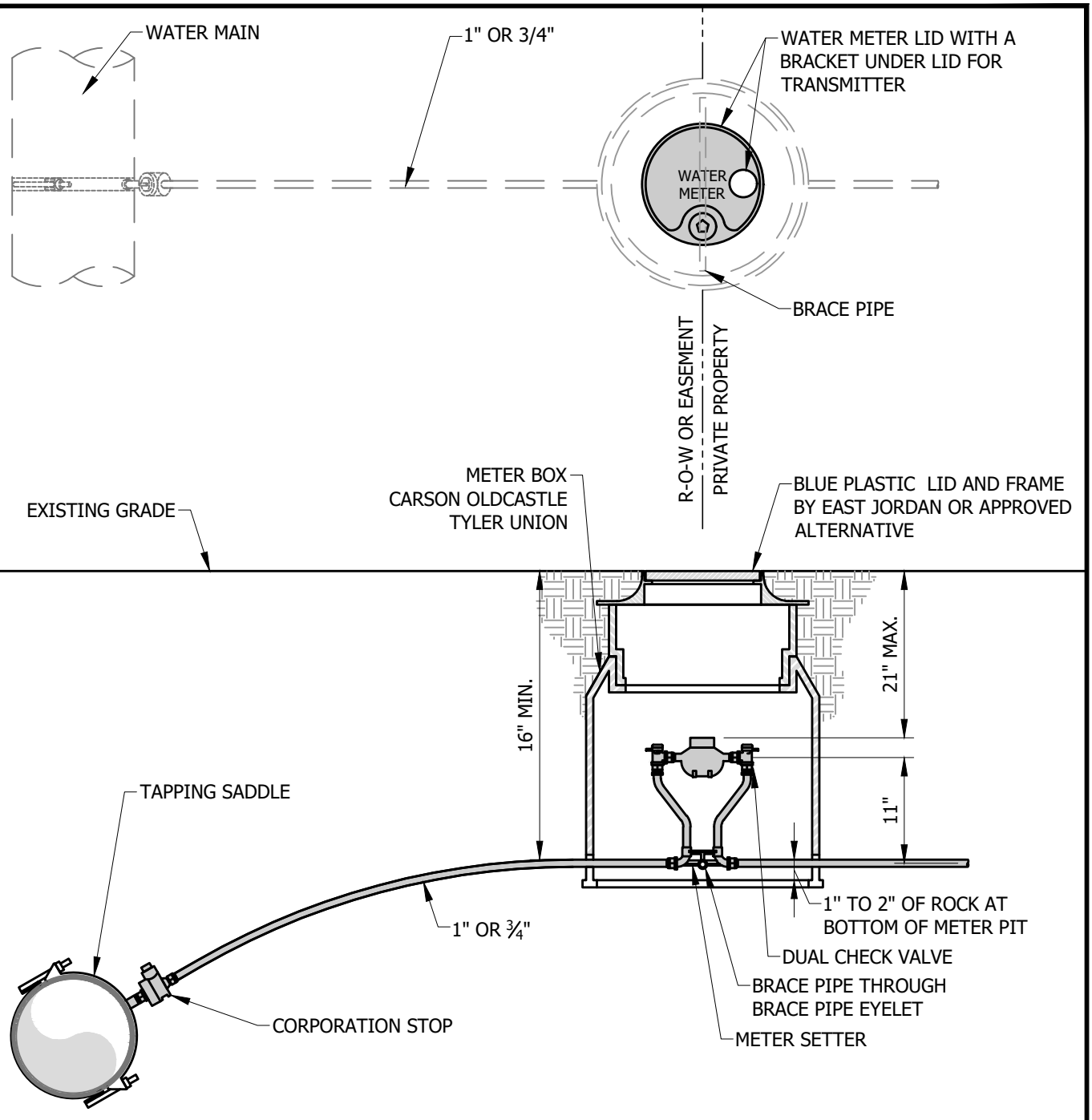

NOTE:

1. USE 1" MATERIAL AND FITTINGS FOR 1" SERVICES.
2. USE ¾" MATERIAL AND FITTINGS FOR ¾" SERVICES.
3. SUBSTITUTES FOR ANY MATERIALS SHOWN SHALL BE APPROVED BY THE CITY UTILITIES
4. ALL PIPE AND STRUCTURE ZONES SHALL BE BACKFILLED USING ¾" MINUS CRUSHED AGG. AND COMPACTED TO 95? MAX. DENS. AS DETERMINED BY AASHTO T-180.
5. METER BOX SHALL BE CENTERED OVER THE COMPLETED METER ASSEMBLY

TOWN OF CHANDLER

101 CONSTITUTION COURT. CHANDLER, IN 47610

3/4" OR 1" WATER SERVICE CONNECTION

Approved: 07/18/22	Adopted: 07/18/22	Figure 5
Approved By: RDC	Scale: N.T.S.	

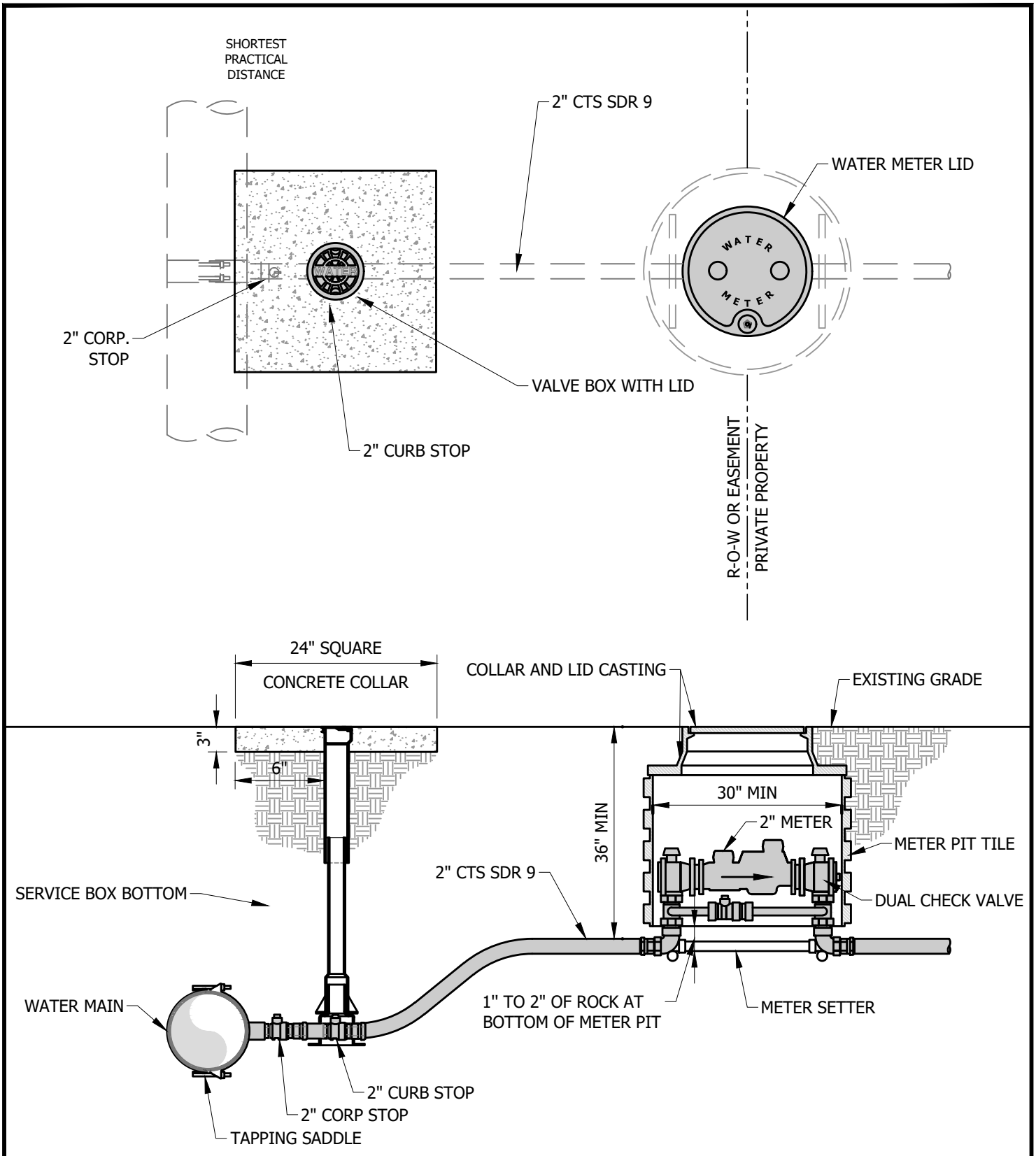

TOWN OF CHANDLER

101 CONSTITUTION COURT. CHANDLER, IN 47610

2" WATER SERVICE CONNECTION

Approved: 07/18/22	Adopted: 07/18/22	Figure 6
Approved By: RDC	Scale: N.T.S.	

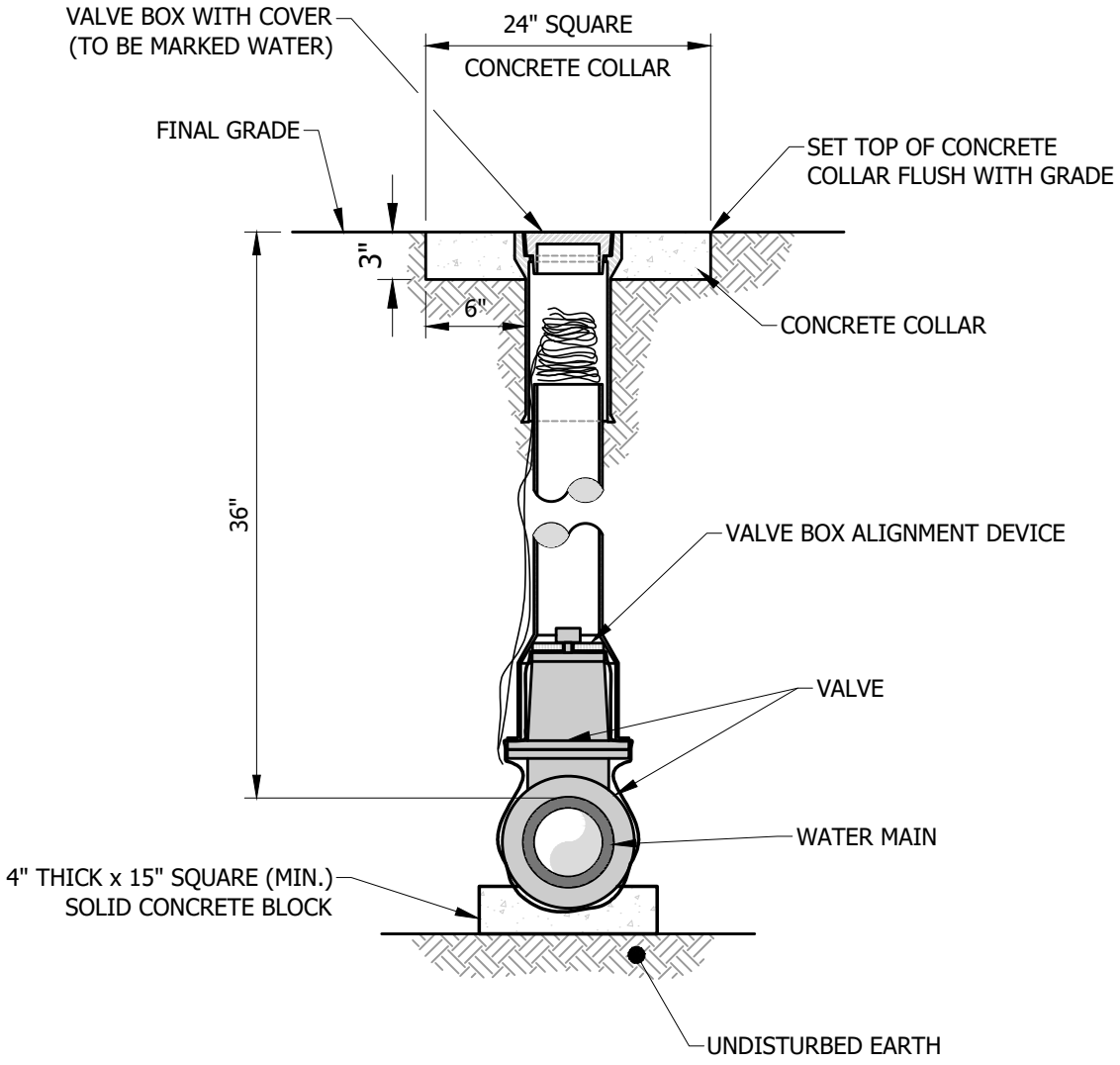

NOTE: VALVE BOX TO BE CONCRETE ENCASED IF NOT IN PAVED AREA

TOWN OF CHANDLER

101 CONSTITUTION COURT. CHANDLER, IN 47610

STANDARD VALVE BOX DETAIL

Approved: 07/18/22	Adopted: 07/18/22	Figure 7
Approved By: RDC	Scale: N.T.S.	

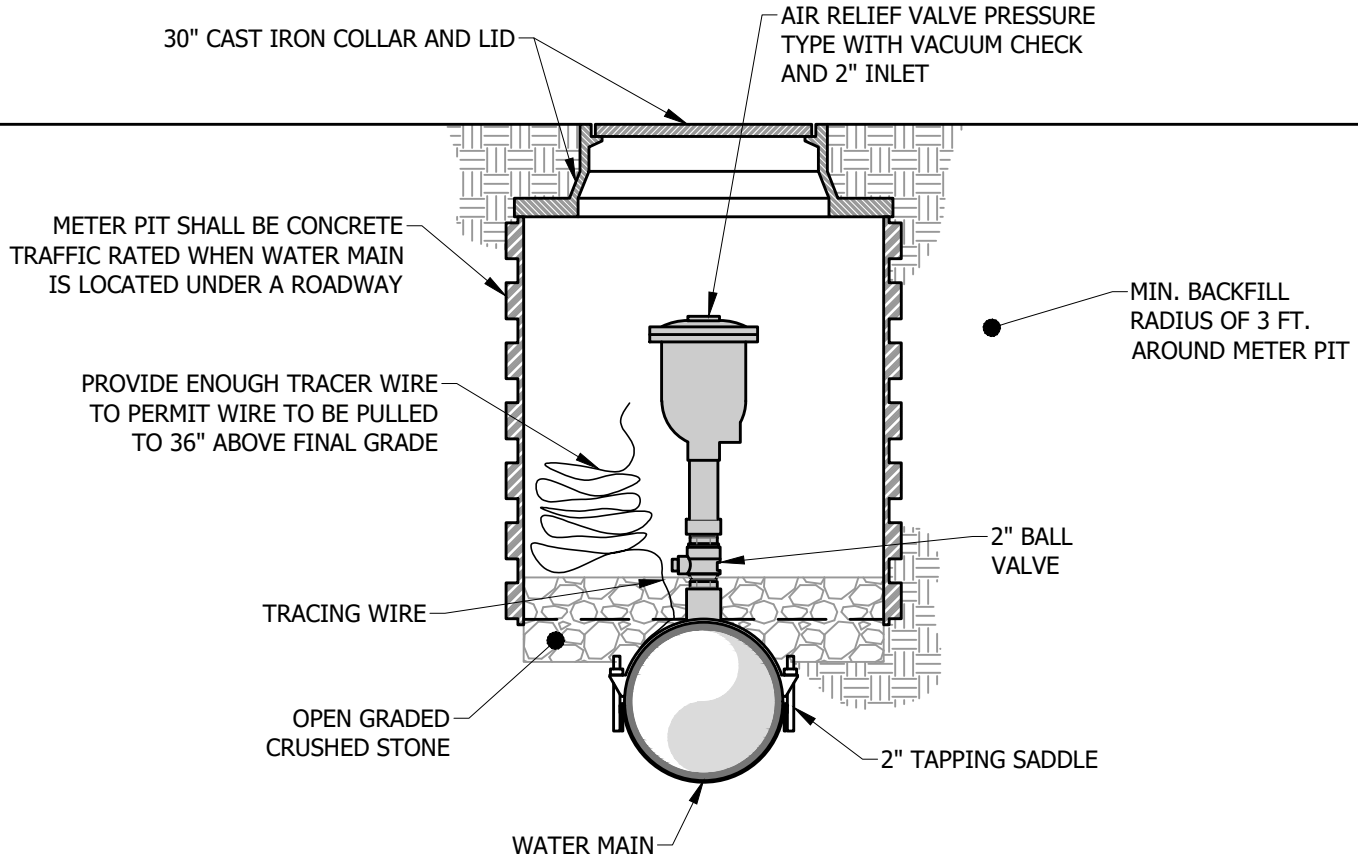

TOWN OF CHANDLER

101 CONSTITUTION COURT. CHANDLER, IN 47610

AIR RELIEF ASSEMBLY

Approved: 07/18/22	Adopted: 07/18/22	Figure 8
Approved By: RDC	Scale: N.T.S.	

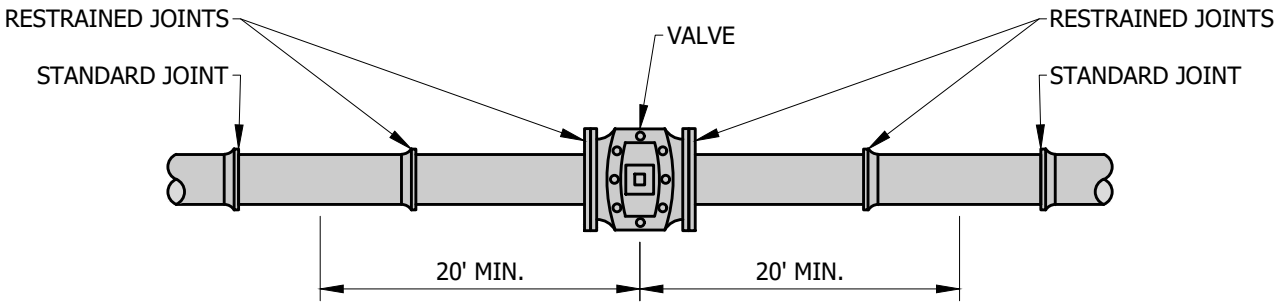

VALVES (NON-DEAD END) 8" AND SMALLER

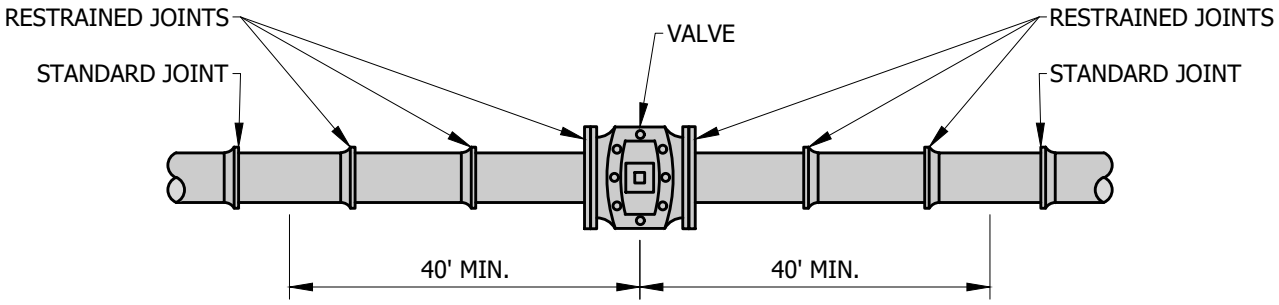

VALVES (NON-DEAD END) 12" AND LARGER

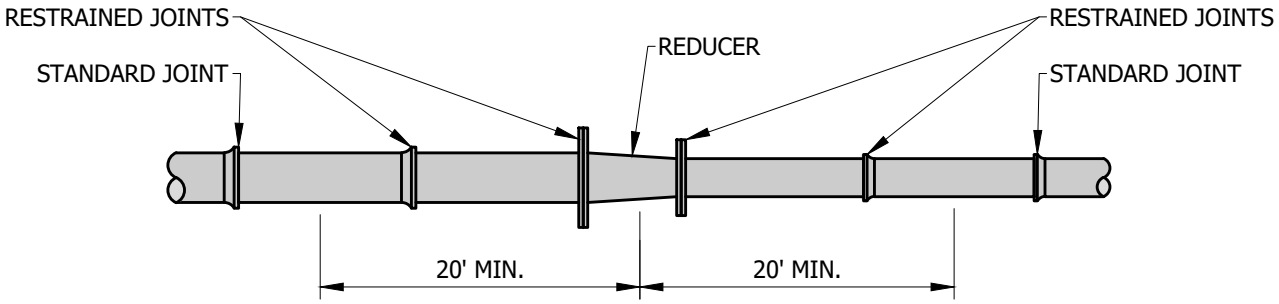

REDUCERS - LARGER PIPE DIAMETER IS 8" OR SMALLER

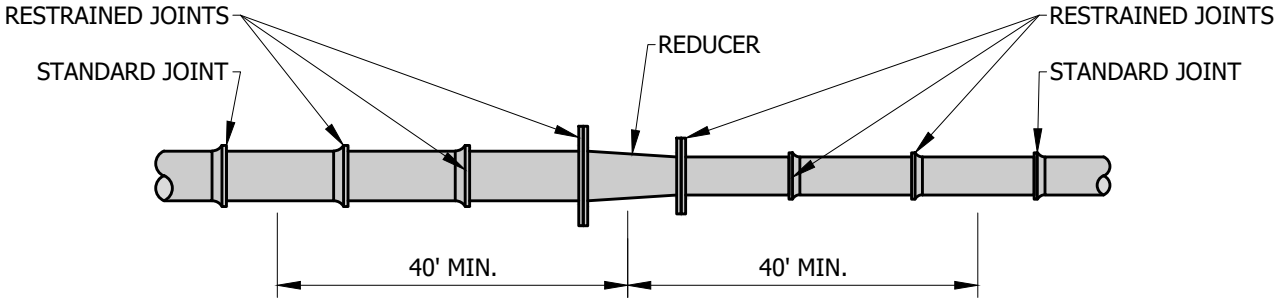

REDUCERS - LARGER PIPE DIAMETER IS 12" OR LARGER

TOWN OF CHANDLER

101 CONSTITUTION COURT. CHANDLER, IN 47610

TYPICAL RESTRAINING FOR VALVES & REDUCERS

Approved: 07/18/22	Adopted: 07/18/22	Figure 9
Approved By: RDC	Scale: N.T.S.	

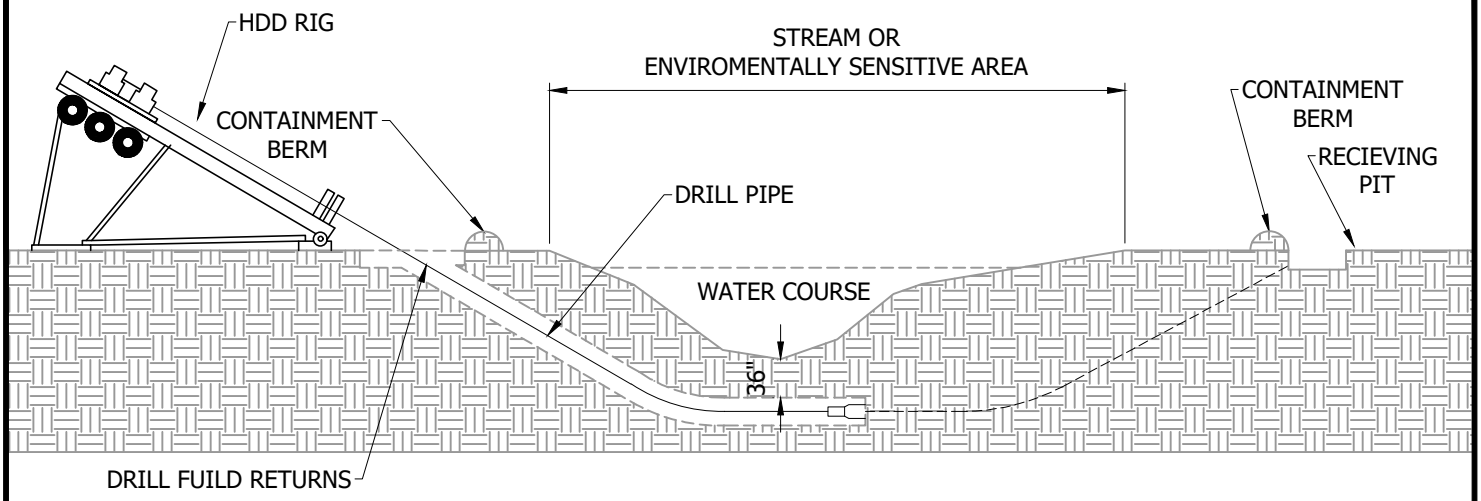

STREAM CROSSING

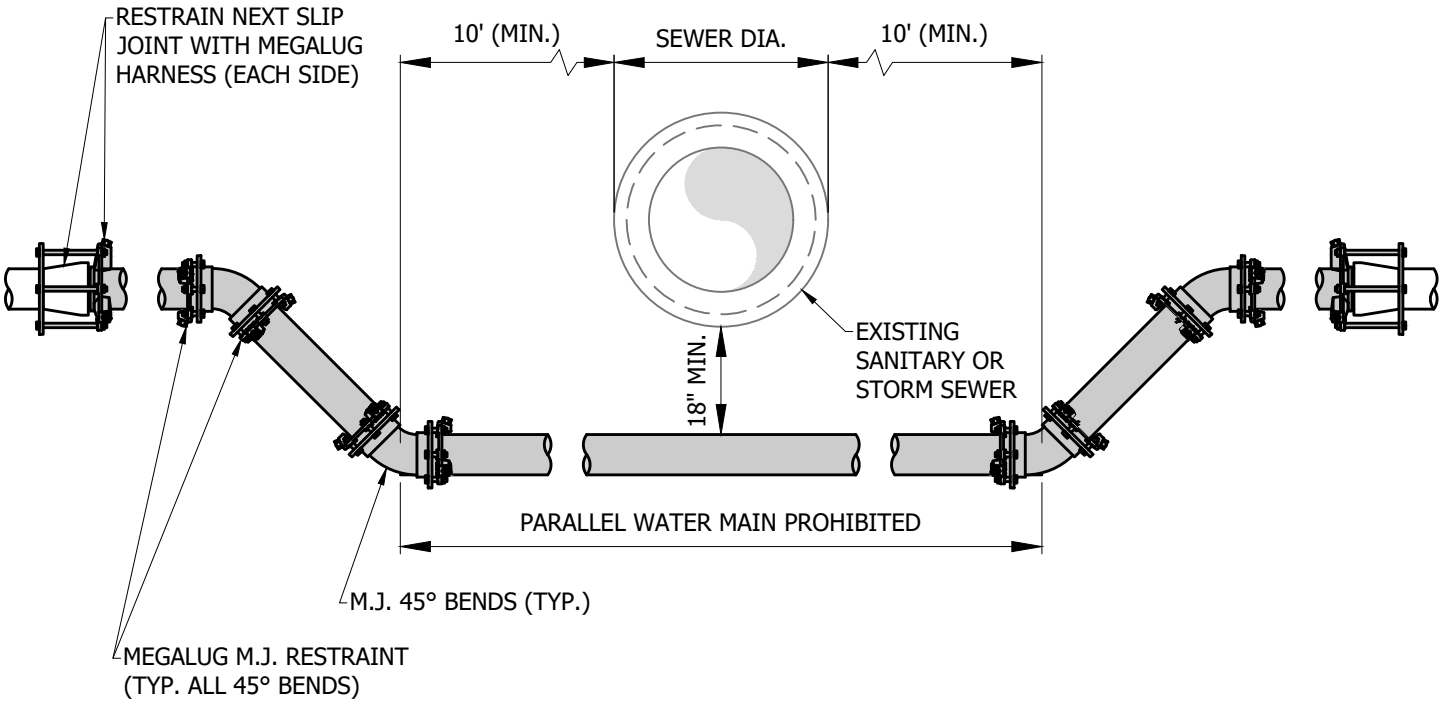

UTILITY CROSSING

NOTES:

1. WHERE IT IS NOT POSSIBLE FOR THE WATER LINE TO BE 1.5 FEET ABOVE THE SEWER LINE, OR THE WATER LINE PASSES UNDER THE SEWER LINE, THE EXISTING SEWER LINE SHALL BE EXPOSED FOR A DISTANCE OF 10 FEET ON EACH SIDE OF THE CROSSING, AND SHALL BE REPLACED WITH CLASS 50 DUCTILE IRON PIPE AS APPROVED BY THE ENGINEER, AND A LENGTH OF WATER PIPE SHALL CENTERED AT THE CROSSING, OR AS APPROVED BY THE ENGINEER.
2. DUCTILE IRON CLASS 52 PIPE WITH M.J. FITTINGS, ONE FULL PIPE LENGTH CENTERED ON CROSSING

TOWN OF CHANDLER

101 CONSTITUTION COURT. CHANDLER, IN 47610

TYPICAL OFFSET ASSEMBLY

Approved: 07/18/22	Adopted: 07/18/22	Figure 10
Approved By: RDC	Scale: N.T.S.	

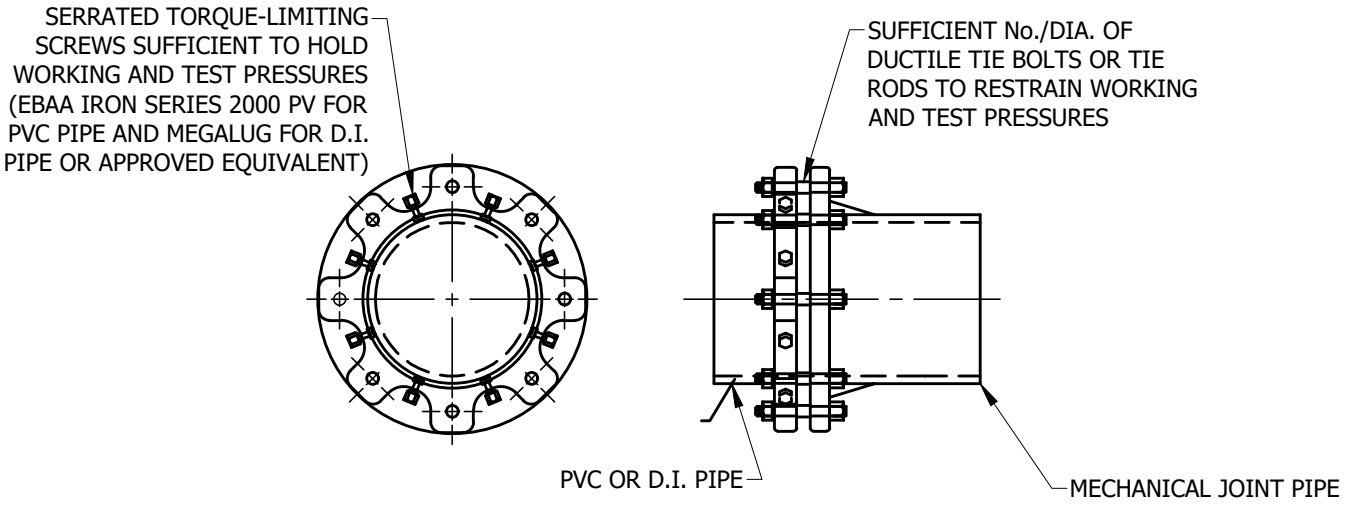

RESTRAINED JOINTS ON MECHANICAL JOINT PIPE & FITTINGS

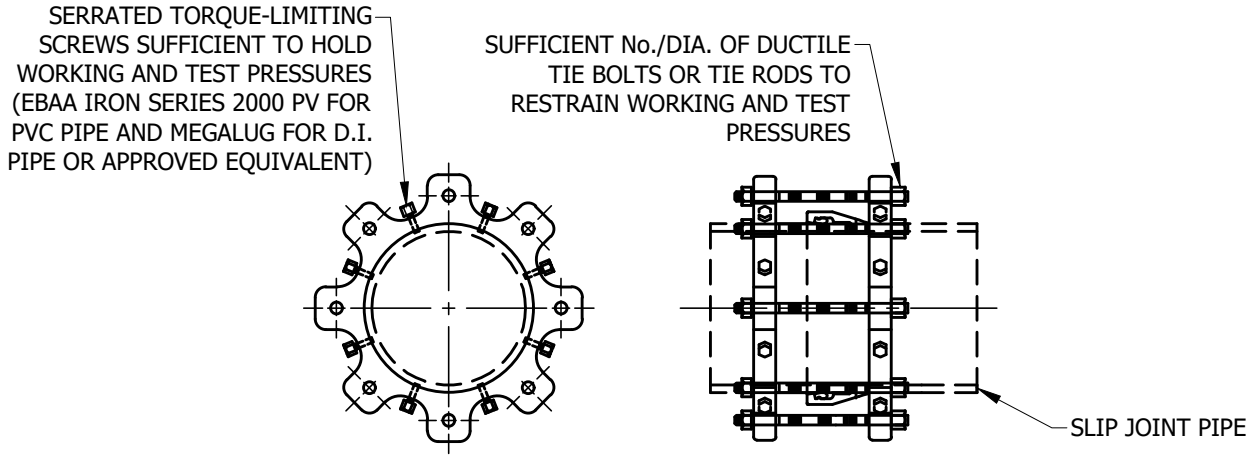

RESTRAINED JOINTS ON SLIP JOINT PIPE

(USING GRIPPING TYPE RETAINERS)

MINIMUM FOOTAGE OF RESTRAINED PIPE FOR VARIOUS DIAMETERS & DEGREES CAST & DUCTILE IRON ELBOWS

COVER / DIA. MAIN	DEGREE OF ELBOW						BRANCH OF TEE	REDUCER (LARGE SIDE ONLY)
	11 ¼°	22 ½°	45°	90°	VERTICAL OFFSET 45°			
					UPPER BEND (3')	LOWER BEND (3')		
DIA. MAIN	3'	3'	3'	3'			3'	3'
6"	2'	5'	10'	25'	49'	10'	9'	159'
8"	3'	6'	13'	32'	63'	12'	?'	?'
10"	4'	8'	16'	39'	77'	15'	119'	107'
12"	5'	9'	19'	47'	90'	36'	163'	N/A

TOWN OF CHANDLER

101 CONSTITUTION COURT. CHANDLER, IN 47610

RESTRAINED JOINTS DETAIL

Approved: 07/18/22	Adopted: 07/18/22	Figure 11
Approved By: RDC	Scale: N.T.S.	

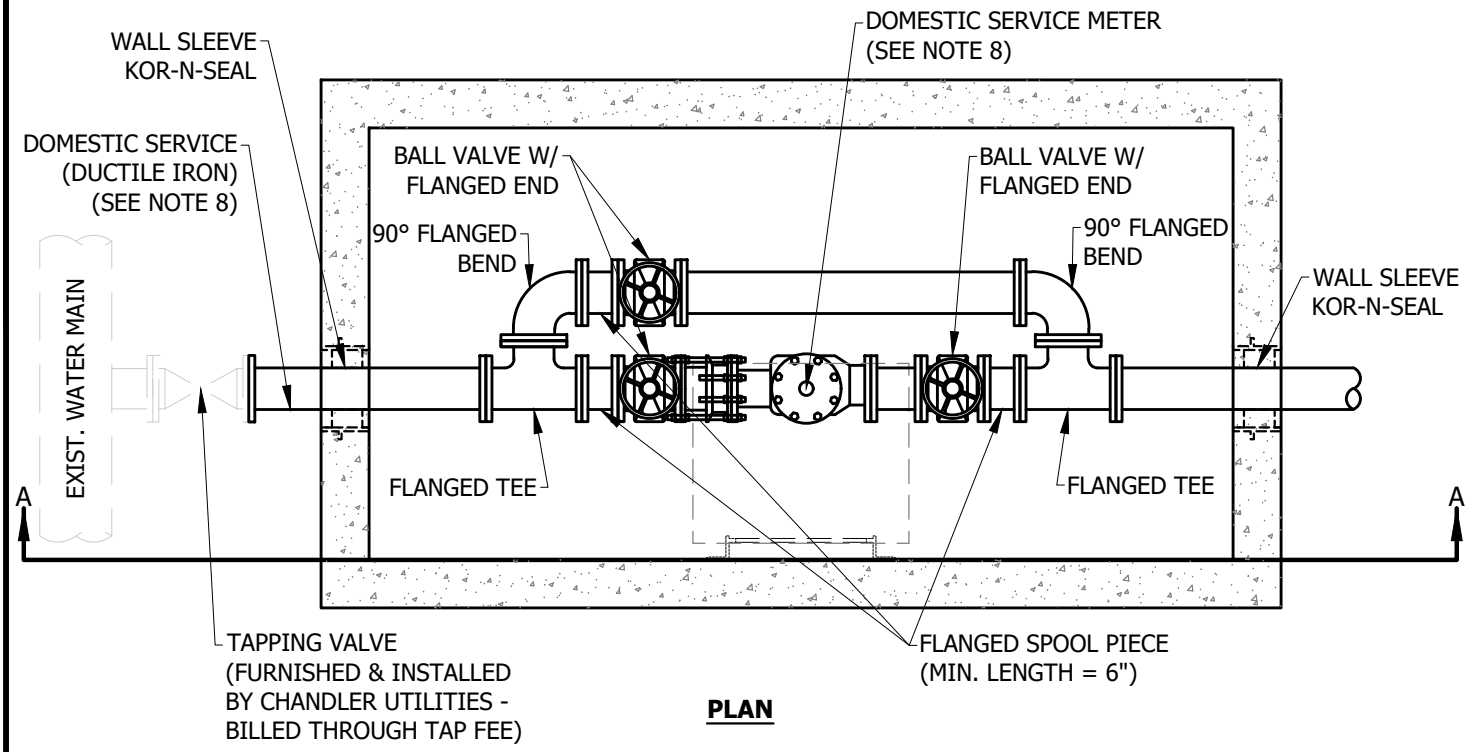

PLAN

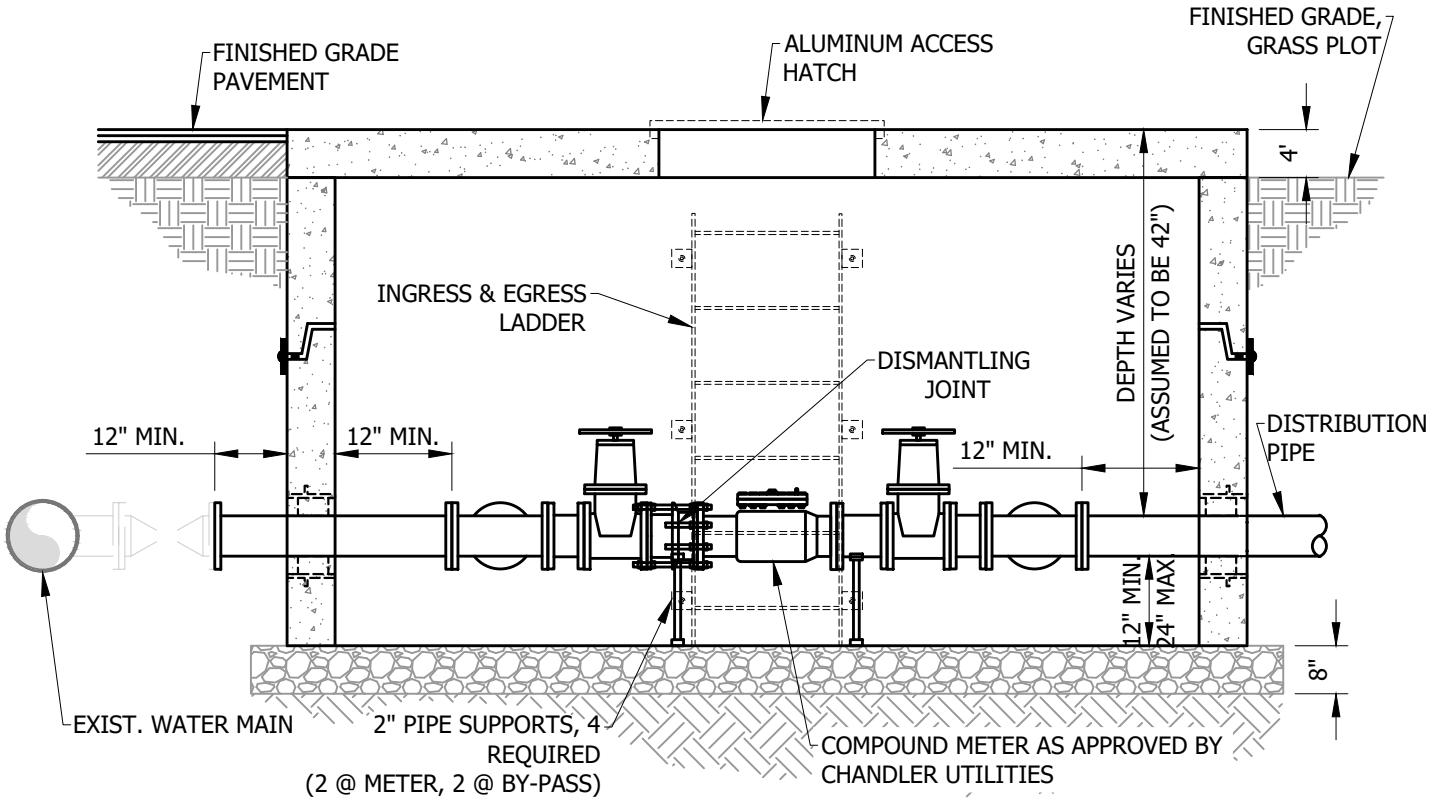

SECTION "A-A"

TOWN OF CHANDLER

101 CONSTITUTION COURT. CHANDLER, IN 47610

STANDARD 3" OR LARGER METER INSTALLATION DETAIL

Approved: 07/18/22	Adopted: 07/18/22	Figure 12A
Approved By: RDC	Scale: N.T.S.	

NOTES:

1. DEVELOPER SHALL FURNISH & INSTALL VAULT.
2. VAULT CONSTRUCTION MATERIAL SHALL BE 8" X 8" X 8", 4,500 PSI OR SIZED AS NEEDED IN ACCORDANCE WITH ASTM C-913.
3. TOP OF VAULT TO BE CONCRETE AT LEAST 4" THICK WITH REINFORCING SUITABLE FOR ANTICIPATED LOADING. WHEN VAULT IS CONSTRUCTED IN PAVED AREAS, PAVEMENT IS TO BE LEVEL WITH TOP OF VAULT, AND THE TOP REINFORCED AS REQUIRED TO SUPPORT TRAFFIC LOADS (I.E. H-20 WHEEL LOADS). WHEN VAULT IS CONSTRUCTED IN GRASS PLOT, TOP OF VAULT SHALL BE 4" ABOVE FINISHED GRADE.
4. ACCESS HATCH IN TOP OF VAULT SHALL BE 30" X 36" ALUMINUM. ACCESS HATCH SHALL HAVE SAME OR GREATER LOADING CAPACITY AS VAULT LID. PIPE HATCH FRAME DRAIN IS VAULT FLOOR OR FLOOR DRAIN IF APPLICABLE.
5. LADDER FOR VAULT INGRESS AND EGRESS SHALL BE PER OSHA REQUIREMENTS. LADDER MATERIAL SHALL BE ALUMINUM OR FIBERGLASS AND INCLUDE BILCO "LADDER-UP" SAFETY DEVICE OR EQUAL.
6. UTILITY AND DEVELOPER RESPONSIBILITIES:
   - 6.1. UTILITY WILL FURNISH AND INSTALL TAPPING SLEEVE, TAPPING VALVE, BOX VALVE, AND DOMESTIC SERVICE FROM TAP ON MAIN.
   - 6.2. DEVELOPER SHALL FURNISH AND INSTALL ALL PIPING FROM DISCHARGE SIDE OF TAPPING VALVE, METER PIT, METER, AND ALL INTERIOR PIPING.
7. CONTRACTOR SHALL VERIFY WITH METER MANUFACTURE FOR THE REQUIRED SPACING BETWEEN SPOOL PIECES FOR INSERTION OF METER.
8. VAULT SHALL BE MADE AS WATER TIGHT AS POSSIBLE.
9. VAULT SHALL HAVE A MINIMUM 3" DRAIN TO THE OUTSIDE.
10. VAULT TO BE CLEAN AND FREE OF DEBRIS PRIOR TO CHARGING OF ALL LINES.
11. ALL PIPING IN VAULT SHALL BE SUPPORTED AS NEEDED AND WITH PROPER MATERIAL.

TOWN OF CHANDLER

101 CONSTITUTION COURT. CHANDLER, IN 47610

STANDARD 3" OR LARGER METER INSTALLATION DETAIL

Approved: 07/18/22	Adopted: 07/18/22	Figure 12B
Approved By: RDC	Scale: N.T.S.	

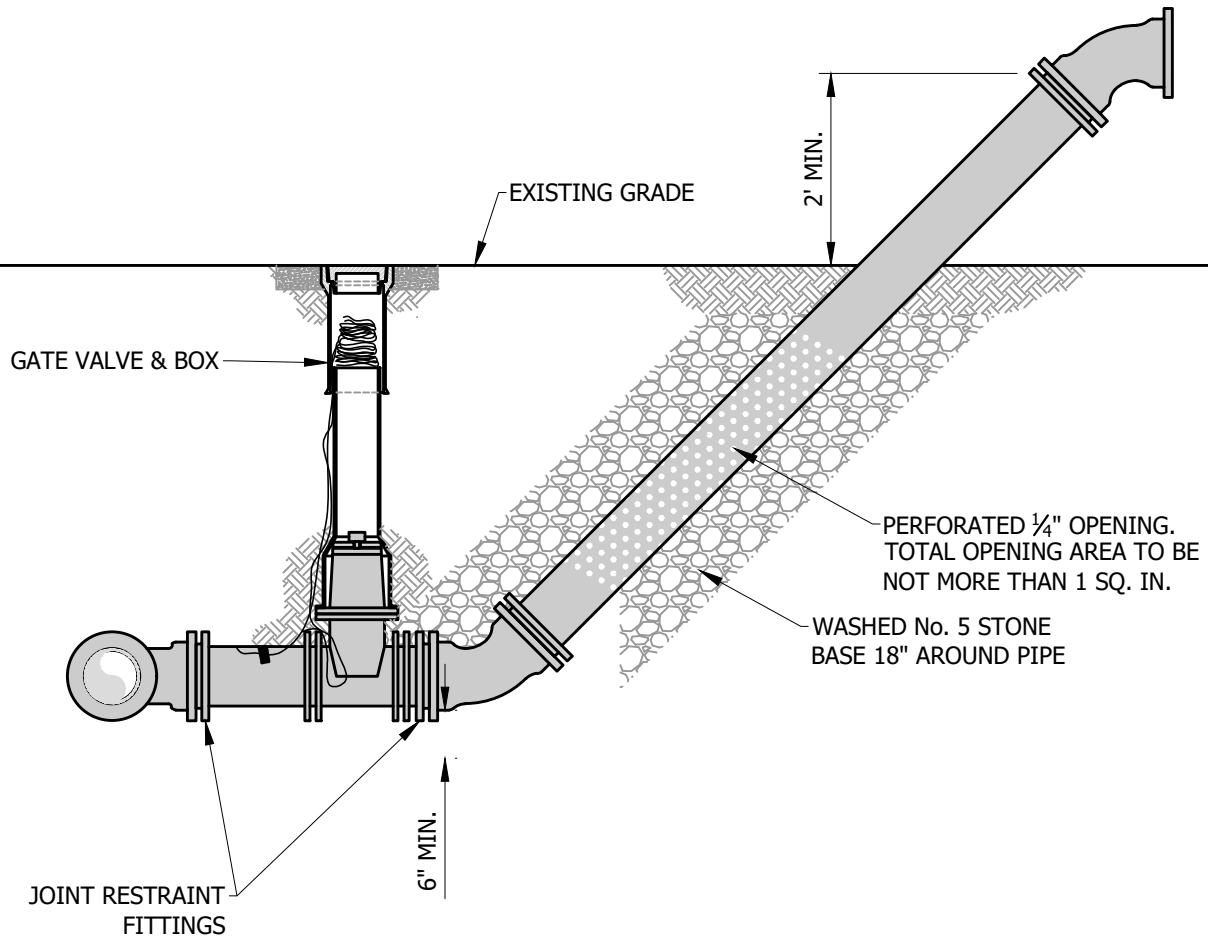

NOTE:
BLOW OFF PIPING AND GATE VALVE SHALL BE SAME SIZE AS WATER MAIN.

TOWN OF CHANDLER

101 CONSTITUTION COURT. CHANDLER, IN 47610

BLOW-OFF VALVE DETAIL

Approved: 07/18/22	Adopted: 07/18/22	Figure 13
Approved By: RDC	Scale: N.T.S.	

DI CARRIER PIPE	WELDING STEEL CASING PIPE	CASING PIPE THICKNESS
6"	16"	0.25"
8"	20"	0.25"
12"	24"	0.375"
16"	30"	0.375"
20"	30"	0.375"
24"	36"	0.375"
30"	42"	0.375"
36"	54"	0.5"

PIPING SIZES

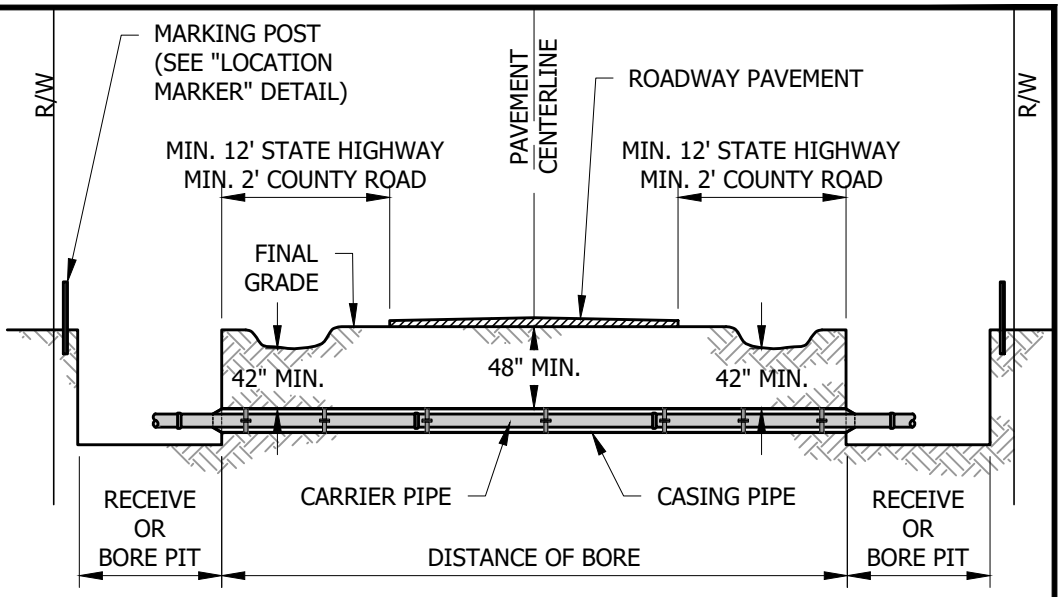

BORING SECTION

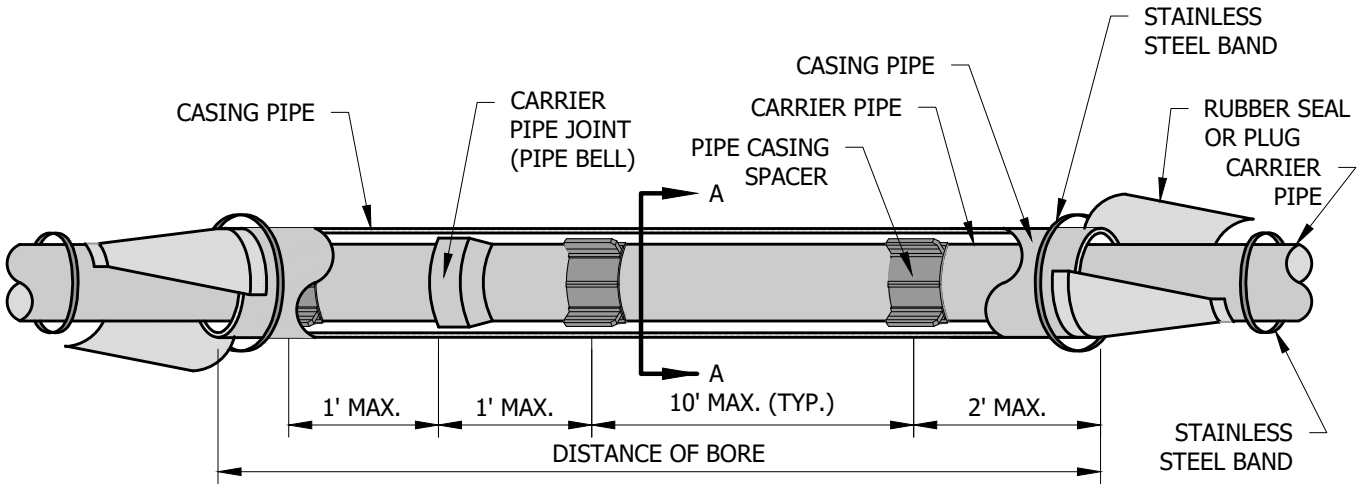

CASING DETAIL

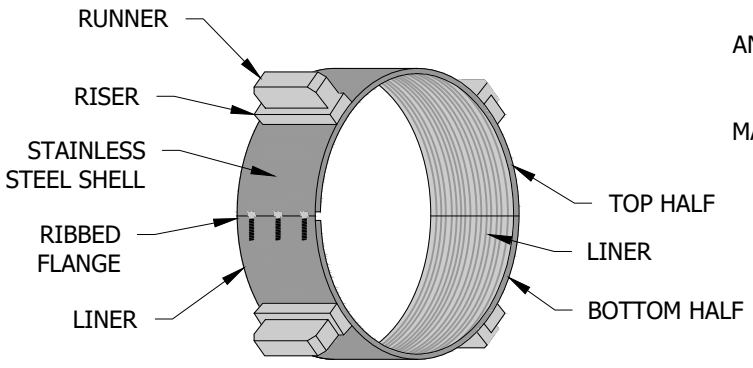

PIPE CASING SPACER (RACI OR EQUAL)

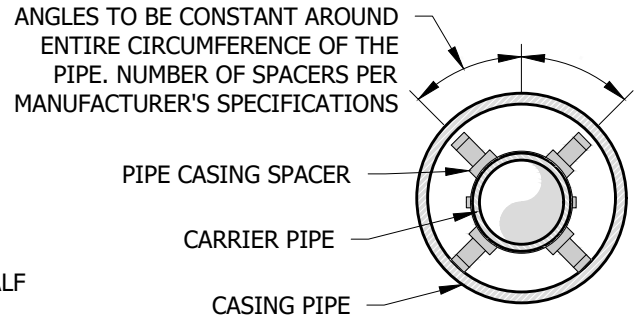

CASING DETAIL SECTION "A-A"

TOWN OF CHANDLER

101 CONSTITUTION COURT. CHANDLER, IN 47610

BORING SECTION & CASING DETAIL

Approved: 07/18/22	Adopted: 07/18/22	Figure 14
Approved By: RDC	Scale: N.T.S.	

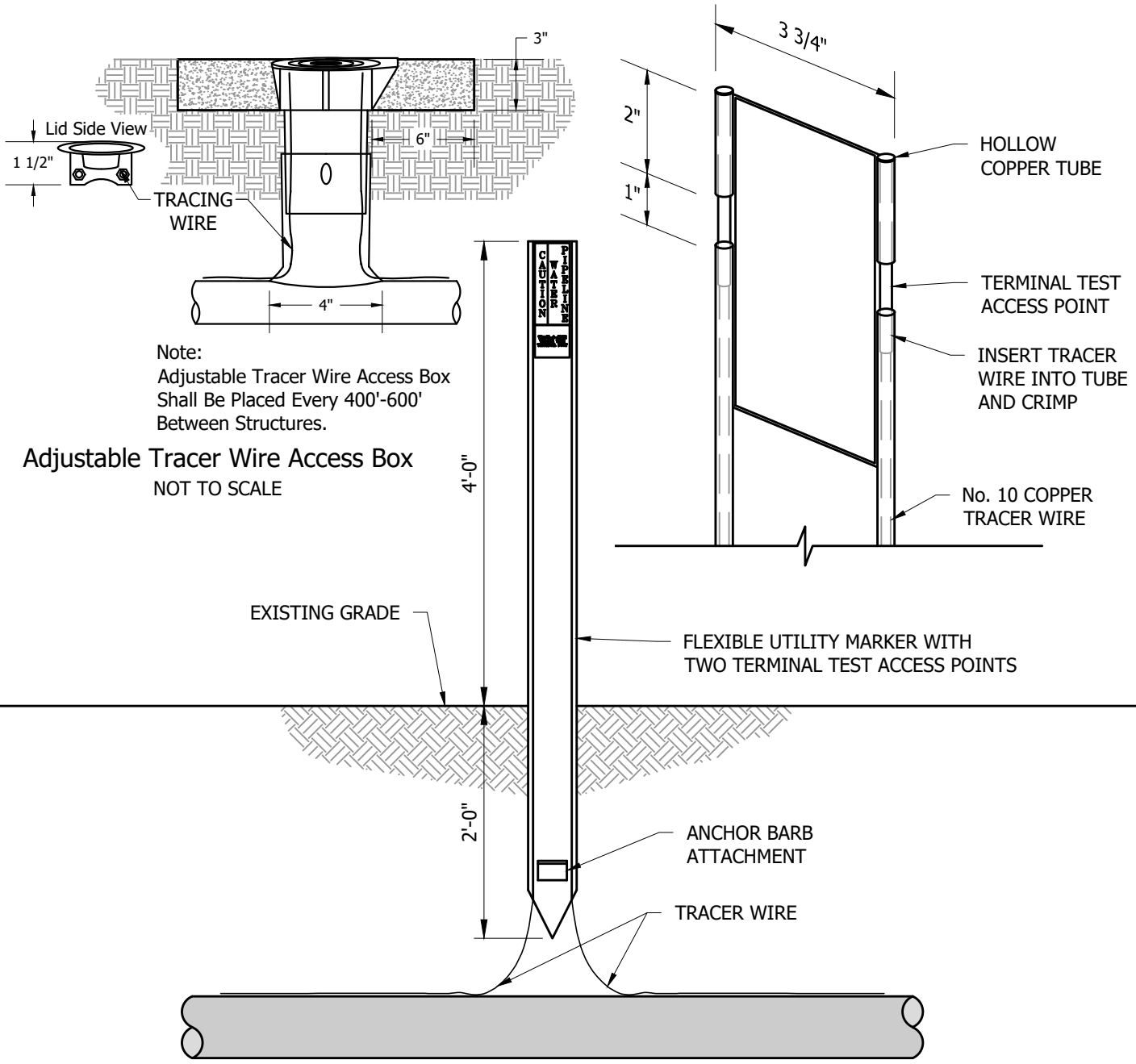

NOTES:

1. FLEXIBLE UTILITY MARKER WITH TWO TERMINAL TEST ACCESS POINTS FOR TRACER WIRE COLOR BLUE MODEL "TUFFCAT" CTFCO7208U WITH DECALS CW-112 AND TOF-2508 AS MANUFACTURED BY CARSONITE INTERNATIONAL, PH. 1-800-648-7917 (OR EQUAL) TO BE INSTALLED AT 1000 FT. MAXIMUM SPACING, IN FENCE LINES, ADJACENT TO FIRE/FLUSH HYDRANTS, ETC.
2. TRACER WIRE SHALL BE No. 10 AWG USE-2, RHY-2, OR RHH SOLID COPPER WIRE WITH 45 MIL POLYETHYLENE INSULATION AND SUITABLE FOR DIRECT BURIAL INSTALLED LONGITUDINALLY ALONG THE PIPE TRENCH. ALL UNDER GROUND SPLICES IN TRACER WIRE SHALL BE CONNECTED WITH A 3M ELECTRICAL PRODUCT DIVISION No. 054007-09053 DIRECT BURIAL SPLICE KIT.

TOWN OF CHANDLER

101 CONSTITUTION COURT. CHANDLER, IN 47610

LOCATION MARKER W/ TRACER WIRE TERMINAL TEST POINTS

Approved: 07/18/22	Adopted: 07/18/22	Figure 15
Approved By: RDC	Scale: N.T.S.	

02220

Site Demolition

SECTION 02220
SITE DEMOLITION

PART 1 - GENERAL

1.1 SUMMARY

A. This Section includes the following:

1. Demolition and removal of selected portions of buildings or structures.

2. Demolition and removal of selected site elements.

3. Salvage of existing items to be reused or recycled.

B. Related sections include the following:

1. Section 01001 – General Administrative Requirements for locations and installation of temporary facilities, utility hookups, parking areas, and termination and removal of temporary facilities.

2. Section 01110 – Summary of the Work for use of premises, Owner-occupancy requirements, and products to be salvaged.

3. Section 02230 – Site Clearing for site clearing and removal of above- and below-grade improvements.

4. Section 02300 – Earthwork for additional excavation and backfill requirements.

5. Section 02510 – Water Distribution for demolition of water distribution systems.

6. Section 02630 – Gravity Storm Sewers for demolition of gravity storm sewer systems.

1.2 DEFINITIONS

A. Remove: Detach items from existing construction and legally dispose of them off-site, unless indicated to be removed and salvaged or removed and reinstalled.

B. Remove and Salvage: Detach items from existing construction and deliver them to Owner. Where indicated, detached items shall be delivered to Owner ready for reuse.

C. Remove and Reinstall: Detach items from existing construction, prepare them for reuse, and reinstall them where indicated.

D. Existing to Remain: Existing items of construction that are not otherwise indicated to be removed, removed and salvaged, or removed and reinstalled.

1.3 MATERIALS OWNERSHIP

A. All items indicated to be removed shall become the property of Contractor at the time of removal.

B. All items indicated to be removed and salvaged or removed and reinstalled shall remain the property of Owner.

1.4 SUBMITTALS

A. Approval Submittals

1. Schedule of Site Demolition Activities: Submit two (2) copies the earlier of 30 days after Notice to Proceed or ten (10) days prior to initial site demolition activities. Indicate the following:
    a. Detailed sequence of site demolition and removal work, with starting and ending dates for each activity. Ensure Owner's on-site operations are uninterrupted.
    b. Interruption of utility services. Indicate how long utility services will be interrupted.
    c. Coordination for shutoff, capping, and continuation of utility services.
    d. Locations of proposed dust- and noise-control.

e. Means of protection for items to remain and items in path of waste removal.

B. Informational Submittals

1. Utility owner's written authorization for interruption at least two (2) days prior to interruption.

2. Inventory: After site demolition is complete, submit a list of items that have been removed and salvaged.

1.5 QUALITY ASSURANCE

A. Demolition Firm Qualifications: An experienced firm that has specialized in demolition work similar in material and extent to that indicated for this Project.

B. Regulatory Requirements

1. Comply with all governing regulations before and during site demolition.

2. Comply with hauling and disposal regulations of authorities having jurisdiction.

3. In accordance with IAC 14-10, complete and submit a demolition/renovation notification to IDEM when demolishing or renovating buildings, houses, canopies, or bridges.

   a. Notification shall be submitted regardless of whether asbestos containing material is present.
   b. Each notification form submitted to IDEM may have a maximum of 10 structures listed on the form.
   c. Fees for this demolition/renovation notification shall be paid by Contractor.

4. Initial notification to IDEM shall be by certified mail, return receipt requested, or by hand delivery. Verification of this notification shall be provided to Engineer. Contractor shall provide such notification 10 work days prior to the date on which demolition or renovation operations are anticipated to begin. If Contractor postpones the beginning date of demolition or renovation operations, IDEM shall

be provided with written notice of the new start date, postmarked at least five work days or delivered at least two work days before these operations begin. Verification of this notification shall also be provided to the Engineer.

C. Standards: Comply with ANSI A10.6 and NFPA 241, as applicable.

1.6 PROJECT CONDITIONS

A. Notify Engineer of discrepancies between existing conditions and Drawings before proceeding with site demolition.

B. Hazardous Materials: It is not expected that hazardous materials, as defined by regulations, will be encountered in the Work.

1. If materials suspected of containing hazardous materials are encountered, do not disturb; immediately notify Engineer and Owner. Owner will remove hazardous materials under a separate contract.

C. Storage or sale of removed items or materials on-site is not permitted.

D. Utility Service: Maintain existing utilities and protect them against damage during site demolition operations.

1.7 WARRANTIES

A. Existing Warranties: Remove, replace, patch, and repair materials and surfaces cut or damaged during site demolition by methods and with materials so as not to void existing warranties.

PART 2 - PRODUCTS (NOT USED)

PART 3 - EXECUTION

3.1 EXAMINATION

A. Verify that utilities have been disconnected and capped where required.

B. Survey existing conditions and correlate with requirements indicated to determine extent of site demolition required.

C. Inventory and record the condition of items to be removed and reinstalled and items to be removed and salvaged.

D. When unanticipated mechanical, electrical, structural or other elements that conflict with intended function or design are encountered, investigate and measure the nature and extent of conflict. Promptly submit a written report to Engineer.

E. Where required by regulation, law, or otherwise required, engage a professional engineer to survey condition of structure to determine whether removing any element might result in structural deficiency or unplanned collapse of any portion of structure or adjacent structures during site demolition operations.

F. Perform surveys as the Work progresses to detect hazards resulting from site demolition activities.

3.2 UTILITY SERVICES AND MECHANICAL/ELECTRICAL SYSTEMS

A. Existing Services/Systems: Maintain services/systems indicated to remain and protect them against damage during site demolition operations.

B. Service/System Requirements: Locate, identify, disconnect, and seal or cap off utility services and mechanical/electrical systems serving areas to be demolished, unless indicated otherwise.

1. Arrange to shut off indicated utilities with utility companies.

2. Owner will arrange to shut off indicated services/systems when requested by Contractor.

3. If services/systems are required to be removed, relocated, or abandoned, before proceeding with site demolition provide temporary services/systems that bypass area of site demolition and that maintain continuity of services/systems.

4. Cut off pipe or conduit in walls or partitions to be removed. Cap, valve, or plug and seal remaining portion of pipe or conduit after bypassing.

    a. Where entire wall is to be removed, existing services/systems may be removed with wall, except where indicated to remove and salvage or remove and reinstall.

3.3 PREPARATION

A. Site Access and Temporary Controls: Conduct site demolition and debris-removal operations to ensure minimum interference with roads, streets, walks, walkways, and other adjacent occupied and used facilities.

B. Temporary Facilities: Provide temporary barricades and other protection required comply with regulatory requirements and to prevent injury to people and damage to adjacent buildings and facilities to remain.

1. Provide protection to ensure safe passage of people around site demolition area and to and from occupied areas.

2. Provide temporary weather protection, during interval between site demolition of existing construction on exterior surfaces and new construction, to prevent water leakage and damage to structure and interior areas.

3. Protect existing finish work that is to remain or that is exposed during site demolition operations.

4. Cover and protect equipment and furnishings that have not been removed.

C. Temporary Shoring: Provide and maintain shoring, bracing, and structural supports as required to preserve stability and prevent movement, settlement, or collapse of construction to remain, and to prevent unexpected or uncontrolled movement or collapse of construction being demolished.

1. Strengthen or add new supports when required during progress of site demolition.

3.4 SITE DEMOLITION, GENERAL

A. General: Demolish and remove existing construction only to the extent required by new construction and as indicated. Use methods required to complete the Work within limitations of governing regulations and as follows:

1. Proceed with site demolition systematically, from higher to lower level. Complete site demolition operations above each level before disturbing supporting members on the next lower level.

2. Neatly cut openings and holes plumb, square, and true to dimensions required. Use cutting methods least likely to damage construction to remain or adjoining construction. Use hand tools or small power tools designed for sawing or grinding, not hammering and chopping, to minimize disturbance of adjacent surfaces. Temporarily cover openings to remain.

3. Cut or drill from the exposed or finished side into concealed surfaces to avoid marring existing finished surfaces.

4. Do not use cutting torches until work area is cleared of flammable materials. At concealed spaces, such as duct and pipe interiors, verify condition and contents of hidden space before starting flame-cutting operations. Maintain portable fire-suppression devices during flame-cutting operations.

5. Maintain adequate ventilation when using cutting torches.

6. Remove decayed, vermin-infested, or otherwise dangerous or unsuitable materials and promptly dispose of off-site.

7. Remove structural members and lower by method suitable to avoid free fall and to prevent ground impact or dust generation.

8. Locate site demolition equipment and remove debris and materials so as not to impose excessive loads on supporting walls, floors, or framing.

9. Neatly arrange all loose material to eliminate safety and health hazards prior to transport.

10. Dispose of demolished items and materials promptly.

3.5 SITE DEMOLITION PROCEDURES FOR SPECIFIC MATERIALS

A. Concrete: Demolish in small sections. Cut concrete to a depth of at least ¾" at junctures with construction to remain, using power-driven saw. Dislodge concrete from reinforcement at perimeter of areas being demolished, cut reinforcement, and then remove remainder of concrete indicated for site demolition. Neatly trim openings to dimensions shown.

B. Masonry: Demolish in small sections. Cut masonry at junctures with construction to remain, using power-driven saw, then remove masonry between saw cuts.

C. Concrete Slabs-on-Grade: Saw-cut perimeter of area to be demolished, then break up and remove.

D. Roofing: Remove no more existing roofing than can be covered in one day by new roofing so that building interior remains watertight and weathertight.

1. Remove existing roof membrane, flashings, copings, and roof accessories.

2. Remove existing roofing system down to substrate.

E. Air-Conditioning Equipment: Remove equipment without releasing refrigerants.

3.6 SITE DEMOLITION PROCEDURES FOR SPECIFIC FACILITIES

A. Below-Grade Concrete Tankage, Pits, and Vaults

1. Break holes in side or bottom of structure at elevations to allow drainage of water from the structure.

2. Remove top and sides of structure down to at least 36 inches (36") below final grade.

3. Fill structure to within 12 inches (12") of top of remaining structure with stone, rubble, or gravel.

a. Rubble shall be crushed to a size that shall minimize settling. Fill voids in rubble with gravel.

4. Cover fill with geotextile fabric or concrete.

B. Buildings and Above-Grade Tankage and Vaults

1. Remove above-grade and at-surface structures entirely, unless indicated otherwise.

2. Excavate to a minimum of thirty-six inches (36") below the lower of existing or final grade, whichever is lower, and remove all foundation structures, connecting piping, and other improvements.

C. Piping Connected to Demolished Facilities

1. Disconnect and remove all connecting piping to thirty-six inches (36") below final grade.

D. Underground Storage Tanks and Hazardous Materials

1. Comply with all requirements of Federal and State regulations in the handling, closure, and disposal of underground storage tanks and contaminated or hazardous materials.

   a. Notify the State Police, IDEM's Office of Environmental Response, the local fire department, the county emergency management coordinator, and the Engineer:
      1) Prior to initiation of Work on an identified UST or hazardous materials site.
      2) Upon discovery of an unidentified UST or hazardous materials site.
   b. Submit a copy of the notification to Engineer prior to initiation of Work.

2. Remove and dispose of contents and permanently close UST systems by removal and disposal in compliance with Federal and State regulations.

   a. Remove and dispose of UST systems and contents in a safe manner in conformance with requirements of American Petroleum Institute Bulletin 1604, Removal and Disposal of Used Underground Petroleum Storage Tanks, Chapters 3 through 6. (Note: As an exception to these requirements, the filling of the tank with water as a means of expelling vapors

from the tank as described in Section 4.2.6.1 of American Petroleum Institute Bulletin 1604, will not be allowed.)

3. Assess UST sites at closure for the presence of contamination as required by Federal and State regulations.

4. Remove and properly treat and dispose of contaminated soil materials at the UST site.

5. Remove and properly treat or dispose of hazardous materials.

6. Complete and submit all required closure forms.

3.7 FILL AT DEMOLITION SITES

A. Fill excavations at demolition sites to match finished surface requirements.

3.8 DISPOSAL OF DEMOLISHED MATERIALS

A. General: Except for items or materials indicated to be reused, salvaged, reinstalled, or otherwise indicated to remain Owner's property, remove demolished materials from Project site and legally dispose of them in a landfill approved for the acceptance of such materials by all applicable regulatory agencies.

1. Do not allow demolished materials to accumulate on-site.

2. Remove and transport debris in a manner that will prevent spillage on adjacent surfaces and areas.

B. Burning: Do not burn demolished materials.

3.9 CLEANING

A. Clean adjacent structures and improvements of dust, dirt, and debris caused by site demolition operations. Return adjacent areas to condition existing before site demolition operations began.

END OF SECTION 02220

02222

Steel Tank Demolition

SECTION 02222
STEEL TANK DEMOLITION

PART 1 - GENERAL

1.1 SUMMARY

A. This Section includes the following:

Demolition and removal of an existing steel tank, including removal of:

1. Below-grade tank foundation construction.
2. Concrete valve pits.
3. Piping.
4. Valve boxes for piping to be abandoned.
5. Fencing and gate.
6. Service buildings.

B. Hazardous materials control and disposal.

C. Barricading of the site prior to commencing demolition work.

D. Remove and deliver to the Owner items mounted on the tank prior to tank demolition work:

1. None

1.2 WORK BY THE OWNER

A. Draining of the tank shall be performed by the Owner.

1.3 RELATED SECTIONS INCLUDE THE FOLLOWING:

A. Section 01001 – General Administrative Requirements for locations and installation of temporary facilities, utility hookups, parking areas, and termination and removal of temporary facilities.

B. Section 01110 - Summary of the Work for use of the premises and phasing requirements.

C. Section 02300 – Earthwork for excavation and backfill requirements.

D. Section 02920 – Lawns and Grasses for surface restoration requirements.

1.4 DEFINITIONS

A. Demolish: Completely remove and legally dispose of off-site.

B. Recycle: Recovery of demolition waste for subsequent processing in preparation for reuse.

C. Salvage: Carefully detach from existing construction, in a manner to prevent damage, store as required and provide to Owner.

1.5 MATERIALS OWNERSHIP

A. Unless otherwise indicated, demolition waste becomes property of Contractor.

B. Emergency alarm siren, low level alarm light, radio antenna are and shall remain the property of the Owner.

C. Historic items, relics, antiques, and similar objects including, but not limited to, cornerstones and their contents, commemorative plaques and tablets, and other items of interest or value to Owner that may be uncovered during demolition remain the property of Owner.

1. Carefully salvage in a manner to prevent damage and promptly return to Owner.

1.6 SUBMITTALS

A. Action Submittals

1. Schedule of Steel Tank Demolition Activities: Indicate as a minimum the following:
    a. Detailed sequence of demolition work, with starting and ending dates for each activity.
    b. Temporary interruption of utility services.
    c. Shutoff and capping or re-routing of utility services.
    d. Locations of temporary protection.
    e. Schedule of work by Owner.
2. Inventory: Submit a list of items to be removed and salvaged and delivered to Owner prior to start of demolition.

B. Informational Submittals

1. Proposed Protection Measures: Submit report, including drawings, that indicates the measures proposed for protecting individuals and adjacent property, for environmental protection, for dust control, potentially hazardous coatings and for noise control. Indicate proposed locations and construction of barriers.
    a. Adjacent Buildings: Detail special measures proposed to protect adjacent buildings to remain and building on property adjacent the site.
2. Pre-demolition Photographs or Video: Show existing conditions of adjacent properties and buildings, adjoining construction and site improvements, including finish surfaces that might be misconstrued as damage caused by steel tank demolition operations. Submit before the Work begins.

C. Project Record Documents

1. Photographic Documentation
2. Laboratory Test Results
3. Landfill Records: Indicate receipt and acceptance of hazardous wastes by a landfill facility licensed to accept hazardous wastes.
4. Record Drawings

1.7 QUALITY ASSURANCE

A. Regulatory Requirements: Prepare a compliance plan meeting the requirements of governing EPA, State and local notification regulations before beginning demolition. Comply with hauling and disposal regulations of authorities having jurisdiction and with RCRA hazardous waste rules and 329I AC 10-2-27, where applicable.

B. Standards: Comply with ANSI A10.6 – 1990 (R 1998) 'Safety Requirements for Demolition'.

C. Pre-Demolition Conference: Conduct conference at Project site. Review methods and procedures related to steel tank demolition including, but not limited to, the following:

1. Inspect and discuss condition of the steel tank to be demolished.
2. Review structural load limitations of existing structures.
3. Review and finalize steel tank demolition schedule and verify availability of demolition personnel, equipment, and facilities needed to make progress and avoid delays.
4. Review and finalize environmental and safety protection requirements.
5. Review procedures for noise control and dust control.
6. Review procedures for protection of adjacent properties and buildings.
7. Review known items to be salvaged and delivered to the Owner.

1.8 PROJECT CONDITIONS

A. The first existing steel tank site is also the site of the new tank, which shall remain operational, with access in and out for all equipment and vehicles, 24 hours per day/7 days per week during the tank demolition work.

B. The second existing steel tank site is located at 500 Frame Road, Newburgh, IN 47630. This site shall remain operational, with access in

and out for all equipment and vehicles, 24 hours per day/7 days per week during the tank demolition work.

C. Do not initiate demolition until the new Paradise water tank is substantially completed and placed into service, along with associated control valve vault at the existing Plank tank.

D. Steel tanks to be demolished shall be emptied and isolated from the water system by the Owner prior to start of the demolition work.

E. Buildings/structures immediately adjacent to demolition areas are residential homes, the new tank, and a cell tower. Conduct steel tank demolition so operations of occupied buildings will not be disrupted.

1. Provide not less than seventy-two (72) hours notice of activities that will affect operations of adjacent occupied buildings.

2. Maintain access to existing walkways, exits, and other facilities used by occupants of adjacent buildings.

a. Do not close or obstruct walkways, exits, or other facilities used by occupants of adjacent buildings without written permission from the property owner or authorities having jurisdiction.

F. Owner assumes no responsibility for steel tank and foundation structures to be demolished.

1. Conditions existing at time of inspection for bidding purpose will be maintained by Owner as far as practical.

G. Hazardous Materials: Hazardous materials may be present in a lead-based paint system commonly found in older water storage tank coatings. However, they are not expected to be present in the paint system on the two steel tanks to be demolished. If they are encountered:

1. Hazardous material remediation is specified in 1.6 of this Section.

2. Do not disturb hazardous materials or items suspected of containing hazardous materials except under procedures specified by law and in the Contract Documents.

3. On-site storage or sale of removed items or materials is not permitted.

1.9 COORDINATION

A. Arrange demolition schedule so as not to interfere with occupation and operations of adjacent occupied buildings.

PART 2 - PRODUCTS (NOT USED)

PART 3 - EXECUTION

3.1 EXAMINATION

A. Verify that utilities have been disconnected and capped before starting demolition operations.

B. Inventory and record the condition of items to be removed and salvaged.

C. Engage a professional engineer to perform an engineering survey of condition of steel tank to determine whether removing any element might result in structural deficiency or unplanned collapse of any portion of structure or adjacent structures during building demolition operations.

D. Verify that hazardous materials have been remediated before proceeding with steel tank demolition operations.

3.2 PREPARATION

A. Existing Utilities: Locate, identify, disconnect, and seal or cap off indicated utilities serving buildings and structures to be demolished.

1. Owner will arrange to shut off indicated utilities when requested by Contractor.

2. If removal, relocation, or abandonment of utility services will affect adjacent occupied buildings, then provide temporary utilities that

bypass buildings and structures to be demolished and that maintain continuity of service to other buildings and structures.

3. Cut off pipe or conduit a minimum of 24 inches below grade. Cap, valve, or plug and seal remaining portion of pipe or conduit after bypassing according to requirements of authorities having jurisdiction.

B. Temporary Shoring: Provide and maintain interior and exterior shoring, bracing, or structural support to preserve stability and prevent unexpected movement or collapse of construction being demolished.

1. Strengthen or add new supports when required during progress of demolition.

C. Salvaged Items: Comply with the following:

1. Clean salvaged items of dirt and demolition debris.

2. Pack or crate items after cleaning. Identify contents of containers.

3. Store items in a secure area until delivery to Owner.

4. Transport items to storage area designated by Owner.

5. Protect items from damage during transport and storage.

3.3 PROTECTION

A. Existing Facilities: Protect site entries and adjacent building facilities during demolition operations.

B. Existing Utilities: Maintain utility services to remain and protect from damage during demolition operations.

C. Remove temporary barriers and protections where hazards no longer exist. Where open excavations or other hazardous conditions remain, leave temporary barriers and protections in place.

3.4 DEMOLITION, GENERAL

A. Install bypass prior to initiation of demolition. The connection of the new pipes, fittings and valve to the existing pipe, fittings or valve shall be mechanically restrained.

B. General: Demolish existing elevated water tanks completely down to ~3 feet below grade. Use methods required to complete the Work within limitations of governing regulations and as follows:

1. Do not use cutting torches until work area is cleared of flammable materials. Maintain portable fire-suppression devices during flame-cutting operations.

2. Maintain fire watch during and for at least two to four (2-4) hours after flame cutting operations.

3. Maintain adequate ventilation when using cutting torches.

4. Locate demolition equipment and remove debris and materials so as not to impose excessive loads on supporting steel or framing.

5. Remove valve boxes of all piping outside the demolition area for valves on piping to be abandoned.

C. Site Access and Temporary Controls: Conduct steel tank demolition and debris-removal operations to ensure minimum interference with roads, streets, walks, walkways, and other adjacent occupied and used facilities.

1. Do not close or obstruct fire department drives or accesses, streets, walks, walkways, or other adjacent occupied or used facilities without permission from Owner and authorities having jurisdiction. Provide alternate routes around closed or obstructed traffic ways if required by authorities having jurisdiction.

2. Use water mist and other suitable methods to limit spread of dust and dirt. Comply with governing environmental-protection regulations. Do not use water when it may damage adjacent construction or create hazardous or objectionable conditions, such as ice, flooding, and pollution.

D. Explosives: Use of explosives is not permitted.

3.5 DEMOLITION BY MECHANICAL MEANS

A. Proceed with demolition of tank and structural framing members systematically, from higher to lower level. Complete tank demolition operations above each level or tier before disturbing supporting members on the next lower level.

B. Remove debris from elevated portions to grade level in a controlled method suitable to minimize ground impact and dust generation.

C. Below-Grade Construction: Demolish foundation walls and other below-grade construction.

1. Fill abandoned utility trenches satisfactory soil materials according to backfill requirements.

3.6 REPAIRS

A. Promptly repair damage to adjacent buildings caused by demolition operations.

3.7 DISPOSAL OF DEMOLISHED MATERIALS

A. Remove demolition waste materials from Project site and legally dispose of them in an EPA-approved landfill acceptable to authorities having jurisdiction.

1. Remove and transport debris in a manner that will prevent spillage on adjacent surfaces and areas.

B. Do not burn demolished materials.

3.8 CLEANING

A. Clean adjacent structures and improvements of dust, dirt, and debris caused by steel tank demolition operations. Return adjacent areas to condition existing before steel tank demolition operations began.

END OF SECTION 02222

USG WATER SOLUTIONS

Town of Chandler

CONDITION ASSESSMENT REPORT



Tank Name:
Paradise Tank

Location:
2852 Fuquay Road

Tank Size and Style:
300,000 Elevated

Project Number:
127576

Inspection Date:
October 16, 2024

Inspected By:
Ryan Rczartoryski

Town of Chandler Contact Information:

Administrative:
Tyler Kinder

Job:
Rob Coghill

Address:
101 Constitution Court
Chandler, IN 47610

Phone/Email:
812-483-7896
tkinder@townofchandler.org

Utility Service Co., Inc.

Address
535 Courtney Hodges Blvd
PO Box 1350
Perry, GA 31069

Email and Website
Website: www.usgwater.com
Email: customerservice@usgwater.com

Customer Service Information
Elena Hampton
800-568-6043

Summary

A visual inspection was performed on the exterior condition. The interior coating was not fully inspected but will be at the next scheduled washout when the interior will be cleaned, inspected and disinfected. The interior roof and structure were partially inspected from hatch. Personnel are not allowed to enter the structure (i.e. "break the plane") when filled with water to maintain compliance with the OSHA 1926.1201 Confined Space for Construction Standard. However, based on this limited view deficiencies were noted with roof structure and their connections.

The tank is scheduled for a Washout Inspection in 2025.

Coating Type & Conditions

- **Interior Coating Condition:** Rust spotting, streaking, and staining noted throughout interior coating. Areas will continue to be monitored.
- **Exterior Coating Condition:** No deficiencies noted in the exterior coating.
- **Logo Condition:** No deficiencies noted.



Interior Roof to Sidewall Coating with Deficiencies



Interior Roof to Sidewall Coating with Deficiencies



Exterior Roof Coating

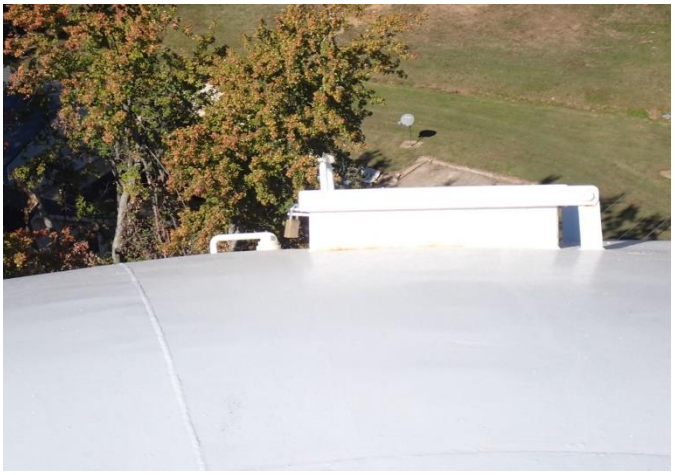

Exterior Roof Coating



Exterior Sidewall Coating



Exterior Sidewall Coating



Exterior Sidewall with Logo Coating



Exterior Sidewall with Logo Coating



Exterior Riser to Under Belly Coating



Exterior Leg Coating

Safety

- **Safety Climbing Devices:** Ladders are equipped with secure safety climbing devices.
- **Access Hatch:** Minor rust spotting on interior access hatch lip. Areas will continue to be monitored.



Access Ladder with Safety Climb



Access Hatch with Deficiencies

Sanitary

- **Vent Screen:** No deficiencies noted with vent screen.
- **Overflow Pipe Screen Flapper:** Overflow pipe is equipped with flap gate. No deficiencies noted.
- **Evidence of Foreign Matter:** No evidence of foreign matter observed.
- **Sediments:** Sediment is present in bottom of tank. Tank will be cleaned at next scheduled washout.



Vent Screen



Overflow Pipe Termination

Security

- **Fence Around Site:** Tank is located inside a fenced-in area that is secure.
- **Ladder Gate/Access Door:** Exterior ladder has a ladder gate installed and is locked.
- **Access Hatch Locked:** Access hatch is locked and secured.
- **Evidence of Vandalism:** No evidence of vandalism was found.



Locked Ladder Gate



Locked Access Hatch

Structural

- **Foundation:** Foundation appears in good condition. No deficiencies noted.
- **Legs:** No deficiencies noted with tank legs. Paint coating continues to protect the substrate.
- **Access Ladders:** No deficiencies noted for dry-side access ladder stiles, rungs and connections.
- **Anchor Bolts:** Anchor bolts are protected and show no rust or corrosion.
- **Riser Pipe:** No deficiencies noted with riser. Paint coating continues to protect the substrate.
- **Riser Rods:** No deficiencies noted with riser rods.
- **Wind Rods:** No deficiencies noted with wind rods.
- **Watertight Conditions:** There were no visible leaks at the time of the inspection.
- **Balcony:** No deficiencies or corrosion damage noted for balcony railings and landings.
- **Interior Ladders:** No deficiencies noted for the interior ladder stiles, rungs and connections.
- **Roof:** Rust streaking/staining and spot corrosion was present on the roof. Areas will continue to be monitored.
- **Vents:** No deficiencies noted with vent.
- **Overflow Pipe:** No deficiencies noted. Overflow pipe extends to ground level.
- **Welds:** No deficiencies noted with weld seams.



Foundation/Base Structure



Riser Manway



Balcony Landing



Interior Roof Structure with Deficiencies



Roof Vent Structure



Overflow Pipe Termination

Steel Tanks
The determinations and recommendations made within this report with respect to the condition of the steel structure, integrity, or other surface defects are based upon visual observations made during the inspection. Extensive testing or investigation of the steel to determine the extent of the metal loss or capacity of the structure was not completed.

Town of Chandler
ATTN: Rob Coghill
101 Constitution Court
Chandler, IN 47610

USG WATER SOLUTIONS

Town of Chandler

CONDITION ASSESSMENT REPORT



Tank Name:
Frame Hill Tank

Location:
5000 S Frame Road

Tank Size and Style:
250,000 Standpipe

Project Number:
127572

Inspection Date:
October 16, 2024

Inspected By:
Ryan Rczartoryski

Town of Chandler Contact Information:

Administrative:
Tyler Kinder

Job:
Rob Coghill

Address:
101 Constitution Court
Chandler, IN 47610

Phone/Email:
812-483-7896
tkinder@townofchandler.org

Utility Service Co., Inc.

Address
535 Courtney Hodges Blvd
PO Box 1350
Perry, GA 31069

Email and Website
Website: www.usgwater.com
Email: customerservice@usgwater.com

Customer Service Information
Elena Hampton
800-568-6043

Summary

A visual inspection was performed on the exterior condition. The interior coating was not fully inspected but will be at the next scheduled washout when the interior will be cleaned, inspected and disinfected. Interior roof and structure were partially inspected from hatch. Personnel are not allowed to enter the structure (i.e. "break the plane") when filled with water to maintain compliance with the OSHA 1926.1201 Confined Space for Construction Standard. However, based on this limited view deficiencies were noted with roof structure and their connections.

The tank is scheduled for a Washout Inspection in 2025.

Coating Type & Conditions

- **Interior Coating Condition:** Corrosion, paint flaking, and rust streaking/staining noted throughout interior coating. Areas will continue to be monitored.
- **Exterior Coating Condition:** Exterior coating has chalked and faded but continues to provide protection. Areas will continue to be monitored.
- **Logo Condition:** No deficiencies noted.



Interior Roof to Sidewall Coating with Deficiencies

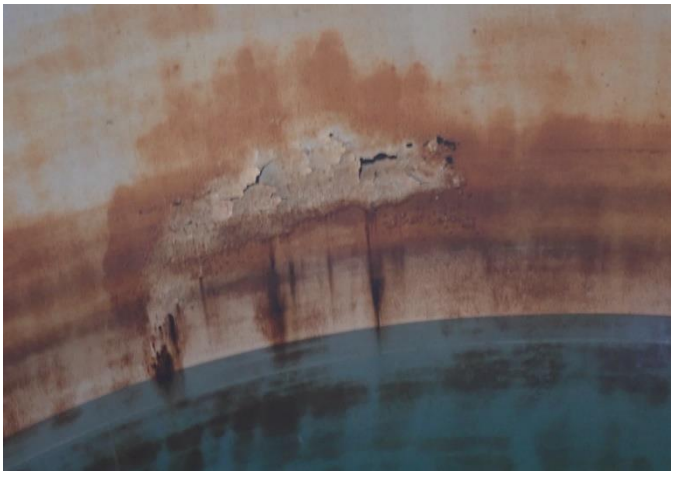

Interior Sidewall Coating with Deficiencies



Exterior Roof Coating

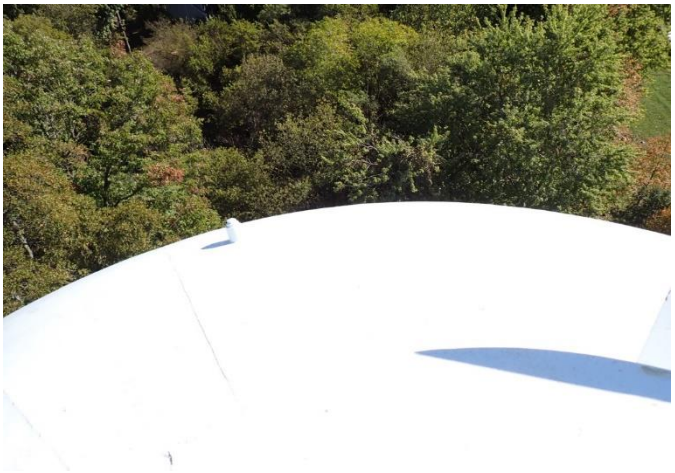

Exterior Roof Coating

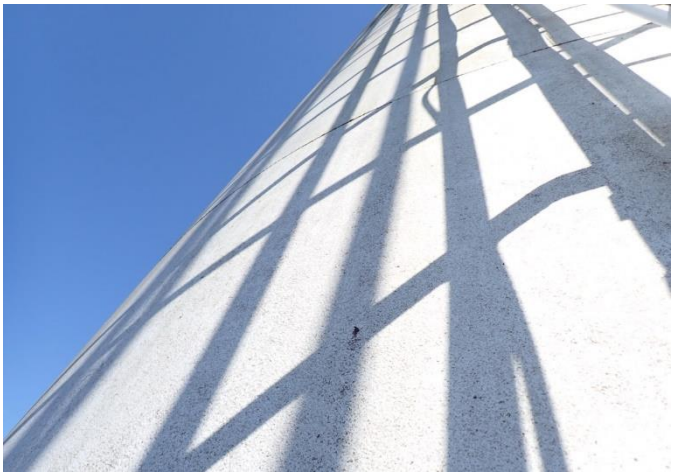

Exterior Sidewall Coating



Exterior Sidewall Coating



Exterior Sidewall Coating



Exterior Sidewall Coating



Exterior Base Coating



Exterior Base Coating

Safety

- **Safety Climbing Devices:** Ladders are equipped with secured safety climb devices.
- **Access Hatch:** No deficiencies noted.

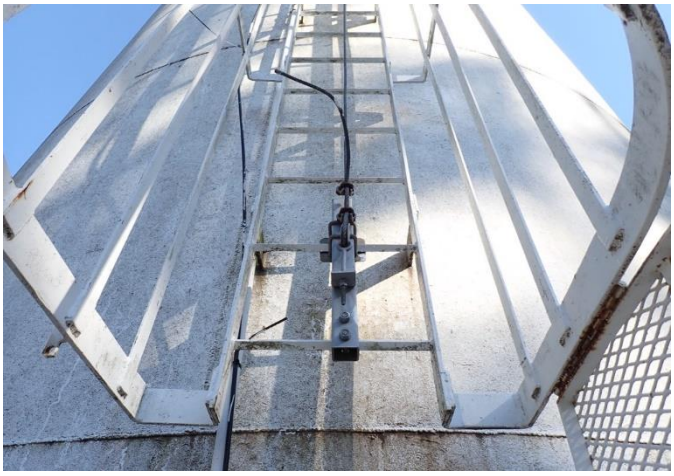

Access Ladder with Safety Climb



Access Hatch

Sanitary

- **Vent Screen:** No deficiencies noted with vent screen.
- **Overflow Pipe Screen Flapper:** Overflow pipe is equipped with flap gate and screen. No deficiencies noted.
- **Evidence of Foreign Matter:** No evidence of foreign matter observed.
- **Sediments:** Sediment is present in bottom of tank. Tank will be cleaned at next scheduled washout.



Vent Screen



Overflow Screen

Security

- **Fence Around Site:** Tank is located inside a fenced-in area that is secure.
- **Ladder Gate/Access Door:** Exterior ladder has a ladder gate installed and is locked.
- **Access Hatch Locked:** Access hatch is locked and secured.
- **Evidence of Vandalism:** No evidence of vandalism was found.



Locked Ladder Gate



Locked Access Hatch

Structural

- **Foundation:** Foundation appears in good condition. No deficiencies noted.
- **Access Ladders:** No deficiencies noted for dry-side access ladder stiles, rungs and connections.
- **Anchor Bolts:** Anchor bolts are protected and show no rust or corrosion.
- **Watertight Conditions:** There are no visible leaks at the time of the inspection.
- **Roof:** Rust streaking/staining and spot corrosion was present on the roof. Areas will continue to be monitored.
- **Vents:** No deficiencies noted with vent.
- **Overflow Pipe:** No deficiencies noted. Overflow pipe extends to ground level.
- **Welds:** No deficiencies noted with weld seams.
- **Level Indicator:** Level indicator is in working condition with no deficiencies noted.



Foundation/Base Structure



Sidewall Manway

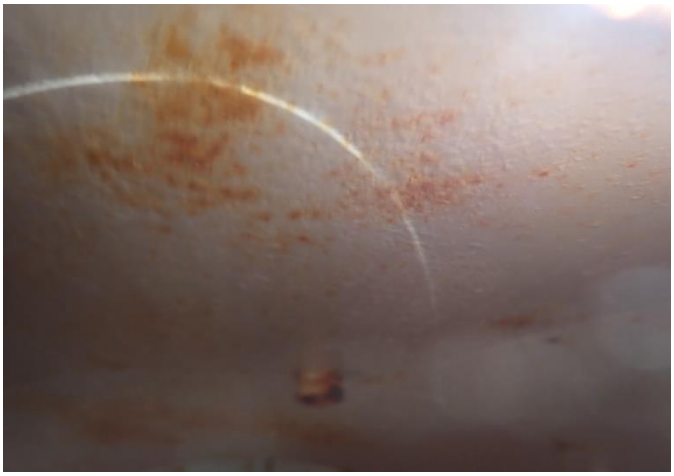

Interior Roof Structure with Deficiencies



Roof Vent Structure



Overflow Pipe Termination



Tank ID Plate

Steel Tanks
The determinations and recommendations made within this report with respect to the condition of the steel structure, integrity, or other surface defects are based upon visual observations made during the inspection. Extensive testing or investigation of the steel to determine the extent of the metal loss or capacity of the structure was not completed.

Town of Chandler
ATTN: Rob Coghill
101 Constitution Court
Chandler, IN 47610

02230

Site Clearing

SECTION 02230
SITE CLEARING

PART 1 - GENERAL

1.1 SUMMARY

A. This Section includes the following:

1. Protecting existing trees, shrubs, groundcovers, plants, and grass to remain.
2. Removing existing trees, shrubs, groundcovers, plants, and grass.
3. Clearing and grubbing.
4. Stripping and stockpiling top soil.
5. Complete removal of above- and below-grade site improvements.
6. Disconnecting, capping or sealing, and abandoning site utilities in place.

B. Related Sections include the following:

1. Section 02300 – Earthwork for soil materials, excavating, backfilling, and site grading.
2. Section 02920 – Lawns and Grasses for finish grading, preparing and placing planting soil mixes and establishment of turf.

1.2 DEFINITIONS

A. Tree Protection Zone: Area surrounding individual trees or groups of trees to be protected during construction and defined by the drip line of individual trees or the perimeter drip line of groups of trees, unless otherwise indicated.

1.3 MATERIAL OWNERSHIP

A. Except for stripped topsoil or other materials indicated to remain Owner's property, cleared materials shall become Contractor's property and shall be removed from Project site.

1.4 PROJECT CONDITIONS

1. Salvageable Improvements: Carefully remove items indicated to be salvaged and store them on Owner's premises where indicated.

PART 2 - PRODUCTS

2.1 SOIL MATERIALS

A. Satisfactory Soils: AASHTO M 145 Soil Classification Groups A-1, A-2-4, A-2-5, and A-3, or a combination of these groups; free of rock or gravel larger than 2 inches in any dimension, debris, waste, frozen materials, vegetation, and other deleterious matter.

B. Unsatisfactory Soils: Soil Classification Groups A-2-6, A-2-7, A-4, A-5, A-6, and A-7 according to AASHTO M 145, or a combination of these groups.

1. Unsatisfactory soils also include satisfactory soils not maintained within 2 percent of optimum moisture content at time of compaction.

C. Provide “B” borrow soil materials in compliance with INDOT SS when sufficient satisfactory soil materials are not available from excavations.

2.2 TOPSOIL

A. Soils defined as Special Topsoil for Roadside Development in accordance with INDOT SS 914.01.

PART 3 - EXECUTION

3.1 PREPARATION

A. Locate and clearly flag trees and vegetation to remain or to be relocated.

3.2 TREE PROTECTION

A. Erect and maintain temporary fencing around tree protection zones before starting site clearing. Remove fence when construction is complete.

1. Do not store construction materials, debris, or excavated material within fenced area.

2. Do not permit vehicles, equipment, or foot traffic within fenced area.

3. Maintain fenced area free of weeds and trash.

4. Maintain lawns within fenced area.

B. Do not excavate within tree protection zones, unless otherwise indicated.

C. Where excavation is required within tree protection zones, hand clear and excavate to minimize damage to root systems. Use narrow-tine spading forks, comb soil to expose roots, and cleanly cut roots as close to excavation as possible.

1. Cover exposed roots with burlap and water regularly.

2. Temporarily support and protect roots from damage until they are permanently redirected and covered with soil.

3. Cut roots above proposed grade where grade is being lowered.

4. Coat cut faces of roots more than 1-1/2 inches (38 mm) in diameter with an emulsified asphalt or other approved coating formulated for use on damaged plant tissues.

5. Backfill with top soil as soon as possible.

D. Repair or replace trees and vegetation indicated to remain that are damaged by construction operations, in a manner approved by Engineer.

1. Employ a certified arborist, a registered consulting arborist, or a registered consulting forester to submit details of proposed repairs and to repair damage to trees and shrubs.

2. Replace trees that cannot be repaired and restored to full-growth status, as determined by Engineer.

3.3 CLEARING AND GRUBBING

A. Remove obstructions, trees, shrubs, grass, and other vegetation to permit installation of new construction.

1. Do not damage or remove trees, shrubs, and other vegetation indicated to remain or to be relocated.

2. Cut minor roots and branches of trees indicated to remain in a clean and careful manner where such roots and branches obstruct installation of new construction.

3. Grind stumps and remove roots, obstructions, and debris extending to below the proposed excavation depth.

4. Use only hand methods for grubbing within tree protection zone.

5. Remove and dispose of off-site.

B. Fill depressions caused by clearing and grubbing operations with soil material unless further excavation or earthwork is indicated.

1. Place fill material in horizontal layers not exceeding a loose depth of 8 inches and compact each layer to a density equal to adjacent original ground.

3.4 TOPSOIL STRIPPING

A. Remove sod and grass before stripping topsoil.

B. Strip topsoil to whatever depths are encountered in a manner to prevent intermingling with underlying subsoil or other waste materials.

1. Remove subsoil and nonsoil materials from topsoil, including trash, debris, weeds, roots, and other waste materials.

C. Stockpile topsoil materials away from edge of excavations without intermixing with subsoil. Grade and shape stockpiles to drain surface water. Cover to prevent windblown dust.

1. Limit height of topsoil stockpiles to seventy-two inches (72”).

2. Do not stockpile topsoil within tree protection zones.

3. Dispose of excess topsoil as specified for waste material disposal.

3.5 SITE IMPROVEMENTS

A. Remove existing above- and below-grade improvements as indicated and as necessary to facilitate new construction.

B. Remove slabs, paving, curbs, gutters, and aggregate base as indicated.

1. Unless existing full-depth joints coincide with line of demolition, neatly saw-cut length of existing pavement to remain before removing existing pavement. Saw-cut faces vertically.

2. Paint cut ends of steel reinforcement in concrete to remain to prevent corrosion.

3.6 DISPOSAL

A. Disposal: Remove surplus soil material, unsuitable top soil, obstructions, demolished materials, and waste materials including trash and debris, and legally dispose of them off Owner's property.

END OF SECTION 02230

02240

Dewatering

SECTION 02240
DEWATERING

PART 1 - GENERAL

1.1 SUMMARY

A. This Section includes construction dewatering where necessary:

1. Prevent surface water and subsurface or ground water from entering excavations, from ponding on prepared subgrades, and from flooding site and surrounding area.

2. Protect subgrades and foundation soils from softening and damage by rain or water accumulation.

B. Related Sections include the following:

1. Section 00310 – Geotechnical Data for available information on below-grade conditions.

2. Section 01001 – General Administrative Requirements for locations and installation of temporary facilities, utility hookups, parking areas, and termination and removal of temporary facilities.

3. Section 02260 – Excavation Support and Protection for protection of excavations.

4. Section 02300 – Earthwork for excavating, backfilling, site grading and for site utilities.

1.2 PERFORMANCE REQUIREMENTS

A. Dewatering Performance: Design, furnish, install, test, operate, monitor, and maintain dewatering system of sufficient scope, size, and capacity to prevent ground-water flow into excavations and permit construction to proceed on dry, stable subgrades.

1. Maintain dewatering operations to ensure erosion control, stability of excavations and constructed slopes, that excavation does not flood, and that damage to subgrades and permanent structures is prevented.

2. Prevent surface water from entering excavations by grading, dikes, or other means.

3. Accomplish dewatering without damaging existing buildings or structures adjacent to excavation.

4. Remove dewatering system when no longer needed.

1.3 SUBMITTALS

A. Informational Submittals

1. Show arrangement, locations, and details of wells and well points; locations of headers and discharge lines; and means of discharge and disposal of water.
    a. Include layouts of piezometers and flow-measuring devices for monitoring performance of dewatering system.
    b. Include a written report outlining control procedures to be adopted if dewatering problems arise.
2. Permits required for dewatering system.

B. Project Record Documents

1. Record drawings at Project closeout identifying and locating capped utilities and other subsurface structural, electrical, or mechanical conditions performed during dewatering.
    a. Note locations and capping depth of wells and well points.

1.4 QUALITY ASSURANCE

A. Regulatory Requirements

1. Obtain permits required for installation, operation, and removal of dewatering system and disposal of water.

2. Comply with water disposal requirements of authorities having jurisdiction.

1.5 PROJECT CONDITIONS

A. Existing Utilities: Do not interrupt utilities serving facilities occupied by Owner or others unless permitted in writing by Engineer or Owner and then only after arranging to provide temporary utility services according to utility owner's direction

B. Project-Site Information: A geotechnical report has been prepared for this Project and is available for information only. The opinions expressed in this report are those of geotechnical engineer and represent interpretations of subsoil conditions, tests, and results of analyses conducted by geotechnical engineer. Owner and Engineer will not be responsible for interpretations or conclusions drawn from this data.

1. Make additional test borings and conduct other exploratory operations necessary for dewatering.

C. Survey adjacent structures and improvements, employing a qualified professional engineer or land surveyor, establishing exact elevations at fixed points to act as benchmarks. Clearly identify benchmarks and record existing elevations.

D. During dewatering, regularly resurvey benchmarks, maintaining an accurate log of surveyed elevations for comparison with original elevations. Promptly notify Engineer if changes in elevations occur or if cracks, sags, or other damage is evident in adjacent construction.PRODUCTS (not used)

PART 2 - EXECUTION

2.1 PREPARATION

A. Protect structures, utilities, sidewalks, pavements, and other facilities from damage caused by settlement, lateral movement, undermining, washout, and other hazards created by dewatering operations.

1. Prevent surface water and subsurface or ground water from entering excavations, from ponding on prepared subgrades, and from flooding site and surrounding area.

2. Protect subgrades and foundation soils from softening and damage by rain or water accumulation.

B. Install dewatering system to ensure minimum interference with roads, streets, walks, and other adjacent occupied and used facilities.

1. Do not close or obstruct streets, walks, or other adjacent occupied or used facilities without written permission from Owner and authorities having jurisdiction. Provide alternate routes around closed or obstructed traffic ways if required by authorities having jurisdiction.

2.2 INSTALLATION

A. Install dewatering system utilizing wells, well points, or similar methods complete with pump equipment, standby power and pumps, filter material of appropriate gradation, valves, appurtenances, water disposal, and surface-water controls.

B. Before excavating below ground-water level, place system into operation to lower water to specified levels. Operate system continuously until pipes, drains, sewers, and structures have been constructed and fill materials have been placed, or until dewatering is no longer required.

C. Provide an adequate system to lower and control ground water to permit excavation, construction of structures, and placement of fill materials on dry subgrades. Install sufficient dewatering equipment to drain water-bearing strata above and below bottom of foundations, drains, sewers, and other excavations.

1. Do not permit open-sump pumping that leads to loss of fines, soil piping, subgrade softening, and slope instability.

D. Reduce hydrostatic head in water-bearing strata below subgrade elevations of foundations, drains, sewers, and other excavations.

1. Maintain piezometric water level a minimum of 24 inches below surface of excavation.

E. Dispose of water removed by dewatering in a manner that avoids endangering public health, property, and portions of work under construction or completed. Dispose of water in a manner that avoids inconvenience to others. Provide sumps, sedimentation tanks, flow-control devices, and temporary sediment and erosion control as required by authorities having jurisdiction.

F. Provide standby equipment on-site, installed and available for immediate operation, to maintain dewatering on continuous basis if any part of system becomes inadequate or fails. If dewatering requirements are not satisfied due to inadequacy or failure of dewatering system, restore damaged structures and foundation soils at no additional expense to Owner.

1. Remove dewatering system from Project site on completion of dewatering.

2. Comply with applicable regulations on the closure of dewatering wells. Where regulations do not apply, plug or fill well holes with sand or cut off and cap wells a minimum of 36 inches below overlying construction.

G. Damages: Promptly repair damages to adjacent facilities caused by dewatering operations.

END OF SECTION 02240

02260

Excavation Support and Protection

SECTION 02260
EXCAVATION SUPPORT AND PROTECTION

PART 1 - GENERAL

1.1 SUMMARY

A. This Section includes temporary excavation support and protection systems.

B. Related Sections include the following:

1. Section 00310 – Geotechnical Data for available information on below-grade conditions.

2. Section 01001 – General Administrative Requirements for locations and installation of temporary facilities, utility hookups, parking areas, and termination and removal of temporary facilities.

3. Section 02240 – Dewatering for dewatering excavations.

4. Section 02300 – Earthwork for excavating and backfilling and for existing utilities.

1.2 PERFORMANCE REQUIREMENTS

A. Furnish, install, monitor, and maintain excavation support and protection system capable of supporting excavation sidewalls and of resisting soil and hydrostatic pressure and superimposed and construction loads.

1. Prevent surface water from entering excavations by grading, dikes, or other means.

2. Install excavation support and protection systems without damaging existing buildings, pavements, and other improvements adjacent to excavation.

1.3 SUBMITTALS

A. Informational Submittals

1. Photographs or videotape, sufficiently detailed, of existing conditions of adjoining construction and site improvements that might be misconstrued as damage caused by the absence of, the installation of, or the performance of excavation support and protection systems.

1.4 PROJECT CONDITIONS

A. Existing Utilities: Do not interrupt utilities serving facilities occupied by Owner or others unless permitted in writing by Engineer and then only after arranging to provide temporary utility services according to utility owner's requirements.

B. Project-Site Information: A geotechnical report may have been prepared for this Project and is available for information only. The opinions expressed in this report are those of geotechnical engineer and represent interpretations of subsoil conditions, tests, and results of analyses conducted by geotechnical engineer. Owner and Engineer will not be responsible for interpretations or conclusions drawn from this data.

1. Make additional test borings and conduct other exploratory operations necessary for excavation support and protection.

C. During installation of excavation support and protection systems, regularly resurvey benchmarks, maintaining an accurate log of surveyed elevations and positions for comparison with original elevations and positions.

1. Survey accuracy shall be no less than 1:4,000 horizontal and 0.01 feet vertical.

2. Promptly notify Engineer if changes in elevations or positions occur or if cracks, sags, or other damage is evident in adjacent construction.

PART 2 - PRODUCTS (NOT USED)

PART 3 - EXECUTION

3.1 PREPARATION

A. Protect structures, utilities, sidewalks, pavements, and other facilities from damage caused by settlement, lateral movement, undermining, washout, and other hazards that could develop during excavation support and protection system operations.

1. Shore, support, and protect utilities encountered according to utility owner's directions.

B. Install excavation support and protection systems to ensure minimum interference with roads, streets, walks, utilities, and other adjacent occupied and used facilities.

1. Do not close or obstruct streets, walks, or other adjacent occupied or used facilities without permission from Owner and authorities having jurisdiction. Provide alternate routes around closed or obstructed traffic ways if required by authorities having jurisdiction.

2. Do not use movable or temporary excavation support and protection systems below the final backfill elevation of utilities.

3. Utility excavation support and protection systems below the final backfill elevation shall be permanent.

a. Leave in place to the top of the initial backfill zone. Cut as required above this elevation.
b. Use only metal products or timber products treated against biological and water degradation.
1) Timber treatment shall be compatible with plastic pipe material.

C. Locate excavation support and protection systems clear of permanent construction so that other Work is not impeded.

D. Monitor excavation support and protection systems daily during excavation progress and for as long as excavation remains open.

Promptly correct bulges, breakage, or other evidence of movement to ensure that excavation support and protection systems remain stable.

E. Promptly repair damages to adjacent facilities caused by installing excavation support and protection systems.

3.2 SOLDIER BEAMS AND LAGGING

A. Install steel soldier beams before starting excavation. Space soldier beams at regular intervals not to exceed allowable flexural strength of wood lagging. Accurately align exposed faces of flanges.

B. Install wood lagging within flanges of soldier beams as excavation proceeds. Trim excavation as required to install lagging. Fill voids behind lagging with soil, and compact.

C. Install wales horizontally at centers indicated and secure to soldier beams.

3.3 SHEET PILING

A. Before starting excavation, install one-piece sheet piling lengths and tightly interlock to form a continuous barrier. Accurately align exposed faces of sheet piling. Cut tops of sheet piling to uniform elevation at top of excavation.

3.4 TIEBACKS

A. Tiebacks: Drill for, install, grout, and tension tiebacks into position according to manufacturer's recommendations. Test load-carrying capacity of each tieback and replace and retest deficient tiebacks.

1. Test loading shall be observed by a qualified professional engineer responsible for design of excavation support and protection system.

2. Maintain tiebacks in place until permanent construction is able to withstand lateral earth and hydrostatic pressures.

3.5 BRACING

A. Bracing: Locate bracing to clear columns, floor framing construction, and other permanent work. If necessary to move brace, install new bracing before removing original brace.

1. Do not place bracing where it will be cast into or included in permanent concrete work, unless otherwise approved by Engineer.

2. Install internal bracing, if required, to prevent spreading or distortion of braced frames.

3. Maintain bracing until structural elements are supported by other bracing or until permanent construction is able to withstand lateral earth and hydrostatic pressures.

3.6 REMOVAL AND REPAIRS

A. Remove excavation support and protection systems when construction has progressed sufficiently to support excavation and bear soil and hydrostatic pressures. Remove in stages to avoid disturbing underlying soils or damaging structures, pavements, facilities, and utilities.

1. Remove excavation support and protection systems to a minimum depth of 48 inches below overlying construction and abandon remainder where required by jurisdictional authority.

B. Repair or replace, as approved by Engineer, adjacent work damaged or displaced by removing excavation support and protection systems.

END OF SECTION 02260

02300

Earthwork

SECTION 02300
EARTHWORK

PART 1 - GENERAL

1.1 SUMMARY

A. This Section includes the following:

1. Preparing subgrades for surface restoration, embankments, slabs-on-grade, walks, drives, and pavements.

2. Excavating and backfilling for buildings and structures.

3. Drainage course for slabs-on-grade.

4. Subbase for asphalt and concrete pavements.

5. Subbase for gravel roads, drives, and parking lots.

6. Subsurface drainage backfill for walls and trenches.

7. Excavating and backfilling for utility trenches, including structure backfill.

B. Related sections include the following:

1. Section 02230 – Site Clearing for site stripping, grubbing, stripping and stockpiling topsoil, and removal of above- and below-grade improvements and utilities.

2. Section 02510 – Water Distribution for installing water distribution systems in excavations.

3. Section 03300 – Cast-in-Place Concrete for installing cast-in-place concrete over earthwork.

4. Divisions 2, 13, and 16 of the Technical Specifications for installing underground mechanical and electrical utilities and buried mechanical and electrical structures.

5. Division 2 of the Technical Specifications for related sitework.

1.2 DEFINITIONS

A. Authorized Additional Excavation: Excavation below subgrade elevations or beyond indicated lines and dimensions as authorized by Work Change Directive or Change Order.

B. Backfill: Material used to fill an excavation.

C. Borrow Soil: Soil imported from off-site for use as fill or backfill.

D. Drainage Course: Course supporting the slab-on-grade that also minimizes upward capillary flow of pore water.

E. Excavation: Removal of material encountered above subgrade elevations and to lines and dimensions indicated.

F. Fill: Soil materials used to raise existing grades.

G. Final Backfill: Backfill placed over initial backfill to fill a trench.

H. Flexible Pipe: Pipe manufactured of polyvinylchloride, polyethylene, high-density polyethylene, or other plastic materials as determined by Engineer.

I. INDOT SS: Indiana Department of Transportation Standard Specifications, and applicable supplements, current at the time of the bid.

J. Initial Backfill: Backfill placed beside and over pipe in a trench, including haunches to support sides of pipe.

K. Pipe Bedding: Aggregate material placed over the excavated subgrade in a trench before laying pipe.

L. Rigid Pipe: Pipe manufactured of ductile iron, cast iron, concrete, steel or other metals, and as determined by Engineer.

M. Rock: Rock shall consist of igneous, metamorphic, and sedimentary rock which cannot be excavated without blasting; the use of a power shovel of not less than 1 cu yd capacity, properly used, having adequate power

and in satisfactory running condition; or the use of other equivalent powered equipment. Rock excavation shall also include all boulders or other detached stones each having a volume of 1/2 cu yd or more.

N. Structures: Buildings, footings, foundations, retaining walls, slabs, manholes, vaults, tanks, curbs, mechanical and electrical appurtenances, or other man-made stationary features constructed above or below the ground surface.

O. Subbase Course: Course placed between the subgrade and base course for hot-mix asphalt pavement, or course placed between the subgrade and a cement concrete pavement, or a cement concrete or hot-mix asphalt walk.

P. Subgrade: Surface or elevation remaining after completing excavation, or top surface of a fill or backfill immediately below subbase, drainage fill, or topsoil materials.

Q. Unauthorized Excavation: Excavation below subgrade elevations or beyond indicated lines and dimensions without authorization by Work Change Directive or Change Order.

R. Utilities: Underground pipes, conduits, ducts, and cables, as well as underground services within buildings and structures and overhead utility supports.

1.3 SUBMITTALS

A. Action Submittals

1. Product Data, including the following:
    a. Each type of plastic warning tape.
    b. Geotextile.
    c. Controlled low-strength material, including design mixture.
    d. Geofoam.
2. Material Test Reports

a. Sieve analysis in accordance with AASHTO T 27 and materials certifications in accordance with INDOT SS of each aggregate proposed for fill or backfill.
b. Classification according to ASTM D2487 of each borrow soil material proposed for fill and backfill.
c. Laboratory compaction curve according to ASTM D1557 for each on-site and borrow soil material proposed for fill and backfill.

3. Samples
   a. 8-by-10-inch sample of geotextile.
   b. 1 lb to 2 lb sample of aggregates in clear plastic zip-lock bag.

B. Informational Submittals
1. Qualification Data
   a. Geotechnical Testing Agency.
2. Product and Material Certificates
3. Schedule of Tests and Inspections
4. Field Test Reports

C. Project Record Documents
1. Field test reports
2. Record Drawings

1.4 QUALITY ASSURANCE

A. Qualifications
1. Geotechnical Testing Agency Qualifications: An independent testing agency qualified according to ASTM E329 to conduct soil materials and rock-definition testing, as documented according to ASTM D3740 and ASTM E548.

PART 2 - PRODUCTS

2.1 SOIL MATERIALS

A. Satisfactory Soils: AASHTO M 145 Soil Classification Groups A-1, A-2-4, A-2-5, and A-3, or a combination of these groups; free of rock or gravel larger than 2 inches in any dimension, debris, waste, frozen materials, vegetation, and other deleterious matter.

1. Provide B borrow soil materials in compliance with INDOT SS when sufficient satisfactory soil materials are not available from excavations.

B. Unsatisfactory Soils: Soil Classification Groups A-2-6, A-2-7, A-4, A-5, A-6, and A-7 according to AASHTO M 145, or a combination of these groups.

1. Unsatisfactory soils also include satisfactory soils not maintained within 2 percent of optimum moisture content at time of compaction.

C. Impervious Fill: Clayey gravel and sand mixture capable of compacting to a dense state.

2.2 OTHER BACKFILL AND FILL MATERIALS

A. Class I, Class II, and Class III Materials: Materials classified according to ASTM D2321.

B. Structure Backfill: Structure backfill material as defined in Section 904.05 of the INDOT SS or No. 53 coarse aggregate as defined in Section 904.03 of the INDOT SS.

C. Flowable Backfill: Flowable backfill in accordance with Section 213 of the INDOT SS.

D. Subbase Material: Material meeting the requirements of Section 302.02 of the INDOT SS or INDOT #2 aggregate.

E. Engineered Fill: Naturally or artificially graded mixture of natural or crushed gravel, crushed stone, and natural or crushed sand; ASTM D2940; with at least 90 percent passing a 1-1/2-inch sieve and not more than 12 percent passing a No. 200 sieve.

F. Drainage Course: Narrowly graded mixture of crushed stone, or crushed or uncrushed gravel; ASTM D448; coarse-aggregate grading Size 57; with 100 percent passing a 1-1/2-inch sieve and 0 to 5 percent passing a No. 8 sieve.

G. Filter Material: Narrowly graded mixture of natural or crushed gravel, or crushed stone and natural sand; ASTM D448; coarse-aggregate grading Size 67; with 100 percent passing a 1-inch sieve and 0 to 5 percent passing a No. 4 sieve.

H. Sand: ASTM C33; fine aggregate, natural, or manufactured sand.

2.3 FILL FOR OVEREXCAVATION

A. Fill for overexcavation, whether inadvertent or to obtain a stable bottom soil condition, shall be INDOT No. 8 or INDOT No. 9 crushed stone or fracture-faced aggregate, No. 2 stone, or Class B concrete at Engineer's direction.

2.4 GEOTEXTILES

A. Geotextiles shall be in compliance with Section 918 of the INDOT SS.

2.5 WARNING TAPE

A. Acid- and alkali-resistant polyethylene film warning tape manufactured for marking and identifying underground utilities, a minimum of 6 inches wide and 4 mils thick, continuously inscribed with a description of the utility, with metallic core encased in a protective jacket for corrosion protection, detectable by metal detector when tape is buried up to 30 inches deep.

B. Warning tape will be colored as follows:

1. Red: Electric.

2. Yellow: Gas, oil, steam, and dangerous materials.

3. Orange: Telephone and other communications.

4. Blue: Water systems.

5. Green: Sewer systems.

2.6 SOIL TREATMENT MATERIALS

A. Soil treatment materials to achieve necessary compaction shall comply with Section 913 of the INDOT SS.

PART 3 - EXECUTION

3.1 PREPARATION

A. Protection

1. Protect structures, utilities, sidewalks, pavements, and other facilities from damage caused by settlement, lateral movement, undermining, washout, and other hazards created by earthwork operations.

2. Prior to excavation work, pothole or otherwise physically confirm location and depth of existing utilities to be exposed by excavation.

   a. Notify Engineer immediately of any potential conflicts with existing utilities.

3. Hand-dig at all locations within two (2) feet of utilities.

4. Provide protective insulating materials to protect subgrades and foundation soils against freezing temperatures or frost.

3.2 EXPLOSIVES

A. Do not use explosives.

3.3 EXCAVATION, GENERAL

A. Unclassified Excavation: Excavate to subgrade elevations regardless of the character of surface and subsurface conditions encountered. Unclassified excavated materials may include rock, soil materials, and obstructions.

1. If excavated materials intended for fill and backfill include unsatisfactory soil materials and rock, replace with satisfactory soil materials.

2. Remove rock to lines and grades indicated to permit installation of permanent construction without exceeding the following dimensions:

   a. 24 inches outside of concrete forms other than at footings.
   b. 12 inches outside of concrete forms at footings.
   c. 6 inches outside of minimum required dimensions of concrete cast against grade.
   d. Outside dimensions of concrete walls indicated to be cast against rock without forms or exterior waterproofing treatments.
   e. 6 inches beneath bottom of concrete slabs on grade.
   f. 6 inches beneath pipe in trenches, and the greater of 24 inches wider than pipe or 42 inches wide.

B. Classified Excavation: Excavate to subgrade elevations. Material to be excavated will be classified as earth and rock. Do not excavate rock until it has been classified and cross sectioned by Engineer.

1. Earth excavation includes excavating pavements and obstructions visible on surface; underground structures, utilities, and other items indicated to be removed; together with soil, boulders, and other materials not classified as rock or unauthorized excavation.

   a. Intermittent drilling; blasting, if permitted; ram hammering; or ripping of material not classified as rock excavation is earth excavation.

2. Rock excavation includes removal and disposal of rock. Remove rock to lines and subgrade elevations indicated to permit installation of permanent construction without exceeding the following dimensions:

a. 24 inches outside of concrete forms other than at footings.
b. 12 inches outside of concrete forms at footings.
c. 6 inches outside of minimum required dimensions of concrete cast against grade.
d. Outside dimensions of concrete walls indicated to be cast against rock without forms or exterior waterproofing treatments.
e. 6 inches beneath bottom of concrete slabs on grade.
f. 6 inches beneath pipe in trenches, and the greater of 24 inches wider than pipe or 42 inches wide.

3.4 EXCAVATION FOR STRUCTURES

A. Excavate to indicated elevations and dimensions within a tolerance of plus or minus 1 inch. If applicable, extend excavations a sufficient distance from structures for placing and removing concrete formwork, for installing services and other construction, and for inspections.

1. Excavations for Footings and Foundations: Do not disturb bottom of excavation. Excavate by hand to final grade just before placing concrete reinforcement. Trim bottoms to required lines and grades to leave solid base to receive other work.

2. Pile Foundations: Stop excavations 6 to 12 inches above bottom of pile cap before piles are placed. After piles have been driven, remove loose and displaced material. Excavate to final grade, leaving solid base to receive concrete pile caps.

3. Excavation for Manholes, Vaults, Underground Tanks, Basins, and Mechanical or Electrical Utility Structures: Excavate to elevations and dimensions indicated within a tolerance of plus or minus 1 inch. Do not disturb bottom of excavations intended as bearing surfaces.

3.5 EXCAVATION FOR WALKS AND PAVEMENTS

A. Excavate surfaces under walks and pavements to indicated lines, cross sections, elevations, and subgrades.

3.6 EXCAVATION FOR UTILITY TRENCHES

A. Excavate trenches to indicated gradients, lines, depths, and elevations.

1. Trench curves for flexible pipe shall not be less than the minimum radius of curvature recommended by pipe manufacturer.

B. Excavate trench walls vertically from trench bottom to 12 inches higher than top of pipe or conduit, unless otherwise indicated.

1. Clearance: Pipe diameter plus 12 inches minimum to 24 inches maximum.

C. Trench Bottoms: Excavate trench bottoms to provide uniform bearing and support of bedding course, pipes and conduits. Remove projecting stones and sharp objects along trench subgrade. Where not otherwise indicated:

1. For pipes and conduit less than 6 inches in nominal diameter and flat-bottomed, multiple-duct conduit units, hand-excavate trench bottoms and support pipe and conduit on an undisturbed subgrade.

2. For pipes and conduit 6 inches or larger in nominal diameter, excavate trenches 6 inches deeper than elevation required to allow for bedding course.

D. Overexcavation: Fill overexcavations to the indicated lines and grades

3.7 SUBGRADE INSPECTION

A. Notify Engineer when excavations for structures, utilities, and pavements have reached required subgrade.

B. If unsatisfactory soil is present, continue excavation and replace with compacted backfill or fill material as directed. Notify Engineer immediately if unsatisfactory subgrade soil is encountered during utility trench excavation.

C. Proof-roll subgrade below utility structures larger than thirty feet (30') in any horizontal dimension and building slabs with heavy pneumatic-tired

equipment to identify soft pockets and areas of excess yielding. Do not proof-roll wet or saturated subgrades.

1. Completely proof-roll subgrade in one direction, repeating proof-rolling in direction perpendicular to first direction. Limit vehicle speed to 3 mph.

2. Proof-roll with a loaded 10-wheel, tandem-axle dump truck weighing not less than 15 tons.

3. Excavate soft spots, unsatisfactory soils, and areas of excessive pumping or rutting, as determined by Engineer, and replace with compacted backfill or fill as directed.

D. Authorized additional excavation and replacement material will be paid for according to Contract provisions.

E. Reconstruct subgrades damaged by freezing temperatures, frost, rain, accumulated water, or construction activities, as directed by Engineer, without additional compensation.

3.8 UNAUTHORIZED EXCAVATION

A. Fill unauthorized excavation under foundations or wall footings by extending bottom elevation of concrete foundation or footing to excavation bottom, without altering top elevation. Lean concrete fill, with 28-day compressive strength of 2500 psi, may be used when approved by Engineer.

1. Fill unauthorized excavations under other construction or utility pipe as directed by Engineer.

3.9 STORAGE OF SOIL MATERIALS

A. Stockpile borrow soil materials and excavated satisfactory soil materials without intermixing. Place, grade, and shape stockpiles to drain surface water. Cover to prevent windblown dust.

1. Stockpile soil materials away from edge of excavations. Do not store within drip line of remaining trees.

3.10 BACKFILL

A. Place and compact backfill in excavations promptly, but not before completing the following:

1. Construction below finish grade including, where applicable, subdrainage, dampproofing, waterproofing, and perimeter insulation.

2. Surveying locations of underground utilities for Record Documents.

3. Testing and inspecting underground utilities where indicated prior to backfill.

4. Removing concrete formwork.

5. Removing trash and debris.

6. Removing temporary shoring and bracing, and sheeting.

7. Installing permanent or temporary horizontal bracing on horizontally supported walls.

B. Place backfill on subgrades free of mud, frost, snow, or ice. Use topsoil removed during site clearing as final layer of backfill, except under structures, pavements, or aggregate surfaces.

3.11 UTILITY TRENCH BEDDING AND BACKFILL

A. Overexcavation

1. Place material in overexcavation on soils free of mud, frost, snow, or ice to indicated lines and grades. Notify Engineer upon restoration of trench bottom and obtain acceptance before proceeding with pipe installation.

B. Pipe Bedding

1. Place pipe bedding where indicated in utility trenches on firm subgrades free of standing water, mud, frost, snow, or ice.

2. Place and compact pipe bedding on trench bottoms and where indicated. Shape pipe bedding to provide continuous support for

bells, joints, and barrels of pipes and for joints, fittings, and bodies of conduits.

C. Initial Backfill

1. Place and compact initial backfill to a height of 12 inches over the utility pipe or conduit.
    a. Carefully hand place and compact initial backfill in lifts no greater than six (6) inches in depth under pipe haunches to springline. Compact each lift evenly up on both sides and along the full length of utility piping or conduit by shovel slicing, hand tamping, and walking the backfill in.
    b. Place and compact remaining initial backfill in lifts to avoid damage or displacement of piping or conduit.
2. Flowable Backfill: Where indicated, place initial backfill of flowable backfill to a height of 12 inches over the utility pipe or conduit.

D. Final Backfill

1. Place and compact final backfill to final subgrade elevation.
2. Place backfill so that it flows into the trench without freefalling.
3. Backfilling with satisfactory soil
    a. Mechanically tamp each lift until no further settlement is obtained before placement of the next lift.
    b. Heavy equipment shall not be used until there is a cover of not less than three (3) feet over the pipes.
    c. Leave trench surface in slightly rounded condition.
    d. Maintain slightly rounded condition until surface restoration activities are initiated, but not less than thirty (30) days.
4. Backfilling with structure backfill
    a. Each lift shall be thoroughly compacted before placement of the next lift by mechanical tamping.
5. Unstable trench walls
    a. Upon written request and with Engineer's prior approval where trench walls become unstable during compaction, Contractor may push final backfill from the back of the trench

into the trench the full depth, not to exceed twenty (20) lineal feet horizontally along the trench bottom, and compact using the vibratory compactor in two (2) foot diagonal lifts.

6. Install warning tape directly above utilities, 12 inches below finished grade, except 6 inches below subgrade under pavements and slabs.

7. Do not jet backfill.

E. Special Conditions

1. For trenches excavated under footings, unless otherwise required by Specifications or code, place utilities in schedule 40 PVC casing pipe and fill to 18 inches either side of footings with Class B concrete to elevation of bottom of footings.

2. Backfill voids with satisfactory soil while installing and removing shoring and bracing.

3.12 SOIL FILL

A. Plow, scarify, bench, or break up sloped surfaces steeper than 1 vertical to 4 horizontal so fill material will bond with existing material.

B. Place and compact fill material in lifts to required elevations as follows:

1. Under grass and planted areas, use satisfactory soil material.

2. Under walks and pavements, use satisfactory soil material.

3. Under steps and ramps, use engineered fill.

4. Under building slabs, use engineered fill.

5. Under footings and foundations, use engineered fill.

C. Place soil fill on subgrades free of mud, frost, snow, or ice.

3.13 SOIL MOISTURE CONTROL

A. Uniformly moisten or aerate backfill soil lift and each subsequent fill or subgrade lift before compaction to within 2 percent of optimum moisture content.

1. Do not place backfill or fill soil material on surfaces that are muddy, frozen, or contain frost or ice.

2. Remove and replace, or scarify and air dry otherwise satisfactory soil material that exceeds optimum moisture content by 2 percent and is too wet to compact to specified dry unit weight.

3.14 COMPACTION OF SOIL BACKFILLS AND FILLS

A. Place backfill and fill soil materials in lifts not more than 8 inches in loose depth for material compacted by heavy compaction equipment, and not more than 4 inches in loose depth for material compacted by hand-operated tampers.

B. Place backfill and fill soil materials evenly on all sides of structures to required elevations, and uniformly along the full length of each structure.

C. Compact soil materials to not less than the following percentages of maximum dry unit weight according to ASTM D1557:

1. Under structures, building slabs, and steps, scarify and recompact top 12 inches of existing subgrade and each lift of backfill or fill soil material at 95 percent.

2. Under walkways, scarify and recompact top 6 inches below subgrade and compact each lift of backfill or fill soil material at 92 percent.

3. Under lawn or unpaved areas, scarify and recompact top 6 inches below subgrade and compact each lift of backfill or fill soil material at 85 percent.

4. For utility trenches with structure backfill, compact each lift of initial and final backfill material at 95 percent.

D. Compact each lift of subbase in accordance with Section 302.06 of the INDOT SS.

E. Compact each lift of base in accordance with Section 301.06 of the INDOT SS.

3.15 GRADING

A. General: Uniformly grade areas to a smooth surface, free of irregular surface changes. Comply with compaction requirements and grade to cross sections, lines, and elevations indicated.

1. Provide a smooth transition between adjacent existing grades and new grades.

2. Cut out soft spots, fill low spots, and trim high spots to comply with required surface tolerances.

B. Site Grading: Slope grades to direct water away from buildings and structures, and to prevent ponding. Finish subgrades to required elevations within the following tolerances:

1. Lawn or Unpaved Areas: Plus or minus 1 inch.

2. Walks: Plus or minus 1 inch.

3. Pavements: Plus or minus 1/2 inch.

C. Grading inside Building Lines: Finish subgrade to a tolerance of 1/2 inch when tested with a 10-foot straightedge.

3.16 SUBSURFACE DRAINAGE

A. Subsurface Drain: Place subsurface drainage geotextile around perimeter of subdrainage trench. Place a 6-inch course of filter material on subsurface drainage geotextile to support subdrainage pipe. Encase subdrainage pipe in a minimum of 12 inches of filter material, placed in compacted lifts 6 inches thick, and wrap in subsurface drainage geotextile, overlapping sides and ends at least 6 inches.

1. Compact each filter material lift with a minimum of two passes of a plate-type vibratory compactor.

B. Drainage Backfill: Place and compact filter material over subsurface drain, in width indicated, to within 12 inches of final subgrade, in compacted lifts 6 inches thick. Overlay drainage backfill with 1 layer of subsurface drainage geotextile, overlapping sides and ends at least 6 inches.

1. Compact each filter material lift with a minimum of two passes of a plate-type vibratory compactor.

2. Place and compact impervious fill over drainage backfill in 6-inch-thick compacted lifts to final subgrade.

3.17 DRAINAGE COURSE

A. Place drainage course on subgrades free of mud, frost, snow, or ice.

B. On prepared subgrade, place and compact drainage course under cast-in-place concrete slabs-on-grade as follows:

1. Install subdrainage geotextile on prepared subgrade according to manufacturer's written instructions, overlapping sides and ends.

2. Place drainage course 6 inches or less in compacted thickness in a single lift.

3. Place drainage course that exceeds 6 inches in compacted thickness in lifts of equal thickness, with no compacted lift more than 6 inches thick or less than 3 inches thick.

4. Compact each lift of drainage course to required cross sections and thicknesses to not less than 95 percent of maximum dry unit weight according to ASTM D698.

3.18 FIELD QUALITY CONTROL

A. Testing Agency: Engage a qualified independent geotechnical engineering testing agency to perform field quality-control testing.

B. Allow testing agency to inspect and test subgrades and each fill or backfill lift. Proceed with subsequent earthwork only after test results for previously completed work comply with requirements.

C. Footing Subgrade: At footing subgrades, at least one test of each soil stratum will be performed to verify design bearing capacities. Subsequent verification and approval of other footing subgrades may be based on a visual comparison of subgrade with tested subgrade when approved by Engineer.

D. Testing agency will test compaction of soils in place according to ASTM D1556, ASTM D2167, ASTM D6938, and ASTM D2937, as applicable. Tests will be performed at the following locations and frequencies:

1. Paved and Building Slab Areas: At subgrade and at each compacted fill and backfill lift, at least 1 test for every 2000 sq. ft. or less of paved area or building slab, but in no case fewer than 3 tests.

2. Foundation Wall Backfill: At each compacted backfill lift, at least 1 test for each 100 feet or less of wall length, but no fewer than 2 tests.

3. Trench Structure Backfill

    a. For final backfill, conduct one test per lift for the shorter of each manhole run or 400 feet of trench length.
    b. Demonstration for Reduced Testing
        1) Demonstrate procedure for proper mechanical compaction with test strip.
        2) Test strip shall be two street crossings or a continuous length of pipe not less than 200 feet in length.
        3) Separate demonstration shall be required for gravity sanitary sewerage.
        4) Test compaction with field density tests at each final backfill lift.
            a) Street crossings shall be tested at two locations equidistant from each other and the edges of the structure backfill.

b) Continuous lengths shall be tested at three lengths equidistant from each other and the edge of the test strip.
c) Demonstration shall be achieved when all initial tests achieve minimum compaction requirements. Additional compaction between tests is not an acceptable demonstration.

5) Upon successful demonstration, the demonstrated method, including equipment, material source, and procedure, shall be used for the duration of the Project.
6) Testing frequency may be reduced to one test per manhole run or 400 feet.
7) Changes to the approved method will require a new demonstration or full testing requirements.

E. When testing agency reports that subgrades, fills, or backfills have not achieved degree of compaction specified, scarify and moisten or aerate, or remove and replace soil to depth required; recompact and retest until specified compaction is obtained.

3.19 PROTECTION

A. Protecting Graded Areas: Protect newly graded areas from traffic, freezing, and erosion. Keep free of trash and debris.

B. Repair and reestablish grades to specified tolerances where completed or partially completed surfaces become eroded, rutted, settled, or where they lose compaction due to subsequent construction operations or weather conditions.

1. Scarify or remove and replace soil material to depth as directed by Engineer; reshape and recompact.

C. Where settling occurs before Project correction period elapses, remove finished surfacing, backfill with additional soil material, compact, and reconstruct surfacing.

1. Restore appearance, quality, and condition of finished surfacing to match adjacent work, and eliminate evidence of restoration to greatest extent possible.

3.20 DISPOSAL OF SURPLUS AND WASTE MATERIALS

A. Disposal: Remove surplus satisfactory soil and waste material, including unsatisfactory soil, trash, and debris, and legally dispose of it off Owner's property.

B. Disposal: Transport surplus satisfactory soil to designated storage areas on Owner's property. Stockpile or spread soil as directed by Engineer.

1. Remove waste material, including unsatisfactory soil, trash, and debris, and legally dispose of it off Owner's property.

END OF SECTION 02300

02630

Gravity Storm Sewers

SECTION 02630
GRAVITY STORM SEWERS

PART 1 - GENERAL

1.1 SUMMARY

A. This Section includes gravity-flow, non-pressure storm sewers with the following components:

1. Storm sewer pipes.

2. Storm sewer structures:

a. Manholes
b. Catch Basins
c. Stormwater Inlets.

B. Related sections include the following:

1. Section 01001 – General Administrative Requirements for locations and installation of temporary facilities, utility hookups, parking areas, and termination and removal of temporary facilities.

2. Section 02300 – Earthwork for excavation, bedding, and backfill requirements.

3. Section 02400 – Boring and Jacking Pipe Installations for installation of storm sewers by the boring and jacking technique.

C. Related regulations include the following:

1. 327 IAC 3-6-9 for separation requirements with water mains and wells.

1.2 ACRONYMS

A. INDOT SS: Indiana Department of Transportation Standard Specifications.

B. PE: Polyethylene plastic.

C. PVC: Polyvinyl chloride plastic.

1.3 QUALIFICATIONS

A. Pipe and fittings shall be qualified products for use with INDOT projects.

B. Manholes

1. Concrete Testing Agency

a. INDOT-approved testing laboratory approved for test method.
b. Capable of performing testing in accordance with ASTM E329.

1.4 SYSTEM REQUIREMENTS

A. Design Requirements

B. Performance Requirements

1. Gravity-Flow, Non-pressure, Drainage-Piping Pressure Rating: 10-foot head of water.

1.5 SUBMITTALS

A. Action Submittals

1. Product Data

a. Pipe and fittings.
b. Castings.

2. Shop Drawings: For the following:

a. Manholes, Catch Basins, and Inlets: Include plans, elevations, sections, details. Indicate castings for use with each structure.

B. Informational Submittals

1. Coordination Drawings

a. After field location of existing utilities:
1) show types, sizes, materials, and elevations of other piping in or crossing same trench and clearances from storm drainage system piping.

2) Indicate interface and spatial relationship between storm sewer system and potable water system within fifteen feet (15') of storm sewer.

b. Manufacturer's Certifications

c. Certified Inspection Report for castings.

2. Product Warranties

C. Project Record Documents

1. Product Data

2. Shop Drawings

3. Field test reports

4. Record Drawings

1.6 QUALITY ASSURANCE

A. Pipe and fitting manufacturer's quality control system shall be ISO 9001 registered.

B. Manholes

1. Allowable Tolerances

a. Length and width of precast units measured at face adjacent to mold shall be the following:

1) Units 10 ft or under: ± 1/8".

2) Units 10 to 20 ft: + 1/8", - 3/16".

3) Units over 20 ft: + 1/8", - 1/4".

b. Thickness of units shall be + 1/4", - 1/8".

c. Units shall not be out of square more than 1/8" per 6 ft or 1/4" total.

PART 2 - PRODUCTS

2.1 GENERAL

A. Plastic pipe, fittings, cement, and seals shall be on the list of approved Plastic Pipe, Fittings, Solvent Cement, and Elastomeric Seals maintained by INDOT at the time of use.

B. Material applications, minimum thickness or strength classification, and protective treatment shall comply with Section 715.02 of the INDOT SS.

C. Joints: Watertight joints with integral bell and spigot. Gasket in accordance with ASTM F477, capable of withstanding ten feet (10') head, unless otherwise indicated.

D. Special Applications and Limitations

1. Piping for Boring and Jacking Pipe Installations

a. Smooth Wall Polyethylene Pipe – DR 11.
b. PVC Pipe – SDR 21 Minimum.
c. Reinforced Concrete Pipe.

2.2 PE PIPE AND FITTINGS

A. Corrugated Polyethylene Drainage Tubing

1. Applicability: Pipe sizes 3 inches through 10 inches.

2. Tubing and fittings shall be in accordance with AASHTO M 252 Type S, with smooth waterway for coupling joints.

3. Perforations shall be required for tubing used as a longitudinal underdrain.

4. Soiltight Couplings: AASHTO M 252M, corrugated, matching tube and fittings.

B. Corrugated Polyethylene Pipe

1. Applicability: Pipe sizes 12 inches through 60 inches.

2. Pipe and fittings shall be in accordance with AASHTO M 294, Type S, with smooth waterway for coupling joints.

3. The compound used in manufacturing this pipe shall have a minimum cell class in accordance with 335420C as shown in ASTM D3350.

C. Ribbed Polyethylene Pipe

1. Applicability: Pipe sizes 8 inches through 30 inches.

2. Pipe and fittings shall be in accordance with ASTM F894 for the specified sizes.

D. Smooth Wall Polyethylene Pipe

1. Pipe shall be in accordance with ASTM F714 for nominal diameters of 39 in. or less.

2. Fittings shall be in accordance with ASTM F1055.

3. Pipe sizes shall be in accordance with ISO sizing system.

4. Pipe dimension ratio shall be 26 or less.

5. The compound used in manufacturing this type of pipe shall have a minimum cell class in accordance with 335434C as shown in ASTM D3350.

2.3 PVC PIPE AND FITTINGS

A. Smooth Wall Small Diameter PVC Pipe

1. Applicability: Pipe sizes 8 inches through 15 inches

2. Pipe shall conform to ASTM D1784 Rigid Poly (Vinyl Chloride) and Chlorinated Poly (Vinyl Chloride) Compounds and one of the following:

   a. ASTM F794.
   b. ASTM D3034.

3. PVC sewer pipe shall be SDR 35 with a cell classification of 12454-B or 12454-C.

B. Smooth Wall Large Diameter PVC Pipe

1. Applicability: Pipe sizes 18 inches through 48 inches

a. Pipe shall meet one of the following:

1) ASTM F794.

2) AASHTO M304M.

C. Smooth Wall Pipe for Outlets

1. Pipe and pipe fittings shall be smooth wall, non-perforated plastic pipe.

2. Type PSM Polyvinyl Chloride Pipe and Fittings

a. Pipe and fittings shall be in accordance with ASTM D3034, SDR 23.5.

3. Schedule 40 Polyvinyl Chloride Pipe

a. Pipe shall be in accordance with ASTM D1785 and shall have a minimum pipe stiffness of 150 psi at 5% deflection when determined in accordance with ASTM D2412.

2.4 REINFORCED CONCRETE PIPE

A. Circular Reinforced Concrete Pipe shall comply with Section 907.02 of the INDOT SS, Class III.

B. Elliptical Reinforced Concrete pipe shall comply with Section 907.03 of the INDOT SS, Class III.

C. Joints: Spigot-and-groove type or tongue and groove type with rubber-type gaskets in compliance with Section 906.04 of the INDOT SS.

2.5 PRE-CAST CONCRETE STRUCTURES

A. Pre-cast concrete manholes, catch basins, and inlets shall comply with Section 907.04 of the INDOT SS

1. Circular structures will comply with ASTM C478.

2. Rectangular and square structures will comply with ASTM C913.

B. Pre-cast reinforced concrete box sections shall comply with Section 907.05 of the INDOT SS.

2.6 EXTERNAL JOINT WRAP

A. External joint wrap for reinforced concrete pipe and pre-cast concrete structures shall comply with ASTM C-877.

2.7 STEEL PIPE AND FITTINGS

A. Applicability: Steel pipe and fittings shall be used for culverts where indicated.

B. Corrugated steel pipe and pipe arches shall comply with Section 908.02 of the INDOT SS.

C. Metal end sections shall comply with Section 908.06 of the INDOT SS.

D. Slotted drain and slotted vane drain pipe shall comply with Section 908.14 of the INDOT SS.

2.8 CASTINGS

A. Castings shall comply with Section 910.05 of the INDOT SS, iron castings or ductile iron castings.

B. Casting types shall be as approved by INDOT.

2.9 COUPLINGS

A. Flexible Transition Couplings for Underground Non-pressure Storm Sewer Piping:

1. Description: ASTM C1173 with elastomeric sleeve, ends same size as piping to be joined, and corrosion-resistant metal band on each end.

PART 3 - EXECUTION

3.1 PIPING INSTALLATION

A. General Locations and Arrangements: Drawing plans, schematics, and diagrams indicate general location and arrangement of piping systems. Indicated locations and arrangements were used to estimate stormwater flows, to size pipes, catch basin and inlet structures, and for other design considerations. Install piping as indicated unless deviations to layout are approved by Engineer.

B. Where existing field tiles conflict with new pipe:

1. Cut the tile.

2. Plug downstream end.

3. Connect the upstream end to the new pipe.

4. Use proprietary cut-in tee or saddle tap.

   a. Core opening in new pipe.

5. Under no circumstance are pipes to be inserted through a hole in the pipe and then mortared in.

C. Install piping beginning at low point, true to grades and alignment indicated with unbroken continuity of invert. Place bell ends of piping facing upstream. Install gaskets, seals, sleeves, and couplings according to manufacturer.

D. Install manholes or structures for changes in pipe direction or pipe grade.

E. Branch Connections.

1. Material and construction requirements for mainline storm sewers shall apply to branches.

F. Install proper size couplings according to manufacturer’s instructions where different sizes or materials of pipes and fittings are connected. Reducing size of piping in direction of flow is prohibited.

G. Install storm-sewer piping according to the following:

1. Meet or exceed minimum slope required by regulatory authorities, where applicable.

2. Install storm sewer piping according to the following INDOT SS, in addition to the provisions of this Section:
   a. Section 715.05 – Laying Pipe.
   b. Section 715.06 – Joining Pipe.
      1) Use couplings, not concrete collars, for joining unlike materials.
   c. Section 715.07 – Tee and Stub-Tee Connections.
   d. Section 715.10 – Pipe End Sections, Anchors, Grated Box End Sections, and Safety Metal End Sections.
   e. Section 720 – Manholes, Inlets, and Catch Basins.

3. The practice of blocking pipe up to grade with select locations of bedding material, then bedding under is prohibited. The entire length of the bed section is to be at proper grade before installing pipe.

4. Laser Beam: Use a laser beam for horizontal and vertical control of the storm sewer, unless alternative method of control is submitted to and accepted by Engineer prior to work.
   a. Set up laser unit so that the alignment of the beam is through the centerline of the pipe or outside the pipe directly above and parallel to the centerline of the pipe.
   b. If set up on the centerline:
      1) Provide a blower for continuous air circulation within the pipe.
      2) Establish a target on line and grade to provide a method of checking the setting of the laser beam as construction progresses.
   c. If set up above the pipe:
      1) Provide means to ensure the grade pole is plumb when checking pipe grade.
      2) Set grade pole on the invert of the pipe when checking alignment and grade.

5. After bedding and pipe installation, place haunching, compact, and obtain satisfactory compaction before placing remaining initial backfill.

H. Clear interior of piping and structures of dirt, water, and superfluous material as work progresses. Place plug in end of incomplete piping at end of day and when work stops.

I. Field Cut Pipe

1. Per manufacturer's recommendations except when joining pipes.

2. Reestablish homing marks, insuring for proper seating depths.

3. Retaper by grinding or filing as close to the original taper provided by the manufacturer as possible.

3.2 STRUCTURE INSTALLATION

A. General: Structures shall be installed straight and plumb. The final structure shall be rigid and true to dimensions.

B. Bottom of excavation shall be flat, level and dry, with stable soils, prior to structure installation. Fill over-excavation with indicated aggregate or concrete material prior to bedding.

C. Install and compact pipe bedding from bottom of structure to level of entry pipe prior to making pipe connection to structure.

D. Place backfill evenly around structure to prevent lateral movement.

E. Install structure sections so that steps, where installed, are in vertical line below casting.

F. In general, top of casting elevations given are an approximate. Set tops of castings flush with finished surface, unless specifically indicated otherwise.

G. Castings Above Grade or in Floodway: Where structure castings are above finished grade, within a legal drain or FEMA designated floodway and not within pavement, or where shown on the plans, structure castings shall be bolted down through the anchor base flange to the structure with four 7/8" stainless steel anchor bolts, washers, and concrete anchors.

3.3 BULKHEADS

A. Construct bulkhead where indicated on Drawings.

B. Pipes shall be bulkheaded or plugged with bricks or blocks and mortar.

C. Bricks or blocks shall be placed so that the longest portion is parallel to the pipe.

D. Each layer of brick or block shall be completely surrounded by mortar so that the pipe is tightly sealed off.

3.4 CONCRETE PLACEMENT

A. Place concrete external to manhole according to ACI 318.

3.5 CLOSING ABANDONED STORM SEWER SYSTEMS

A. General: Where new sewers replace existing sewers, abandon existing sewers only after completion of construction, testing, and acceptance of new sewers. Connect existing inlets to new sewers prior to abandonment.

B. Abandoned Piping

1. Abandonment by Removal
    a. Remove and dispose of all piping to be abandoned.
    b. Fill excavation with final backfill in accordance with utility trench requirements.
2. Abandonment by Capping
    a. Clean pipe to be abandoned using high pressure jetting and, if required, heavy cleaning.
    b. Close open ends of underground piping to be abandoned with plastic plugs, concrete, or other acceptable methods suitable for size and type of material being closed.
    c. Do not use wood plugs.
3. Abandonment by Filling
    a. Clean pipe to be abandoned using high pressure jetting and, if required, heavy cleaning.

b. Flowable backfill is to be pumped into the sewer pipe from one manhole to the next.
c. Abandoned pipes are to be filled with flowable backfill until it is visually apparent on the opposite end that all space within the pipe has been filled.

C. Abandoned Structures

1. Abandonment by Filling

a. Break two holes in side of structure at bench elevation of the structure.
b. Remove top of structure down to at least 36 inches (36") below final grade.
c. Fill structure to within 12 inches (12") of top of remaining manhole structure with stone, rubble, or gravel.
d. Fill top 12 inches of structure with concrete.
e. Fill excavation with final backfill in accordance with utility trench requirements.

2. Abandonment by Removal

a. Excavate and remove manhole.
b. Fill excavation with final backfill in accordance with utility trench requirements.

3.6 FIELD QUALITY CONTROL

A. Visual Inspection

1. Visually inspect new storm sewer systems, and parts of existing systems that have been altered, extended, or repaired.

a. Inspect interior of main line piping by lamping to determine whether line displacement or other damage has occurred.
b. Inspect after approximately 24 inches (24") of backfill is in place, and again at preparation of initial punch list.

2. Inspections indicating defects must be repaired or replaced.

3. Replace failed work using new materials, and repeat inspection until results are satisfactory.

END OF SECTION 02630

02700

Bases and Pavements

SECTION 02700
BASES AND PAVEMENTS

PART 1 - GENERAL

1.1 SUMMARY

A. This Section includes installation or repair of the following:

1. Granular, asphalt, or concrete bases.
2. Asphalt, concrete or aggregate driveways, roadways, and parking lots.
3. Concrete curbs and gutters.
4. Asphalt or concrete walkways.
5. Aggregate shoulders for asphalt and concrete pavements.
6. Pavement markings.
7. Wheel Stops.
8. Metal Bollards.

B. Related sections include the following:

1. Section 01001 – General Administrative Requirements for locations and installation of temporary facilities, utility hookups, parking areas, and termination and removal of temporary facilities.
2. Section 02220 – Site Demolition for demolition, removal, and recycling of existing pavements.
3. Section 02230 – Site Clearing for site stripping, grubbing, stripping and stockpiling topsoil, and removal of above- and below-grade improvements and utilities.
4. Section 02300 – Earthwork for preparation of aggregate subbase and base, and aggregate pavement shoulders.

1.2 REFERENCES

A. INDOT SS: Indiana Department of Transportation (INDOT) Standard Specifications, and applicable supplements, current at the time of the bid.

B. Approved or Prequalified: On the list of materials, equipment, and sources maintained by INDOT in accordance with INDOT SS Section 106 or otherwise certified by INDOT at the time of the bid.

1.3 DEFINITIONS

A. Base: Aggregate material placed between the subbase course and hot-mix asphalt or concrete paving, or used as a driving surface.

B. Cementitious Materials: Portland cement alone or in combination with one or more of blended hydraulic cement, fly ash and other pozzolans, and ground granulated blast-furnace slag.

C. Paving Terminology: Refer to INDOT SS for definitions of terms.

1.4 SUBMITTALS

A. Action Submittals

1. Product Data, including the following:
    a. Asphalt Job Mix Formula: For each asphalt job mix proposed for the Work in accordance with INDOT SS.
    b. Concrete Design Mixtures: For each concrete pavement mixture. Include alternate mixture designs when characteristics of materials, Project conditions, weather, test results, or other circumstances warrant adjustments.
    c. Each joint-sealant product.
2. Shop Drawings
    a. Indicate pavement markings, lane separations, and defined parking spaces. Indicate, with international symbol of accessibility, spaces allocated for people with disabilities.
3. Samples
    a. For each paving fabric, 8 inches by 10 inches.

B. Informational Submittals

1. Qualification Data

a. For manufacturers of Approved or Prequalified materials by INDOT SS.

2. Material Certificates

a. Where Approved or Prequalified: For each paving material, from manufacturer.
b. Where not Approved or Prequalified: For each paving material, signed by manufacturers certifying that each of the following materials complies with requirements:
   1) Asphalt materials.
   2) Cementitious materials.
   3) Steel reinforcement and reinforcement accessories.
   4) Fiber reinforcement.
   5) Admixtures.
   6) Curing compounds.
   7) Applied finish materials.
   8) Bonding agent or epoxy adhesive.
   9) Joint fillers.
c. For each type of joint sealant and accessory, signed by product manufacturer.

3. Material Test Reports

a. For each paving material, from manufacturer, in accordance with INDOT SS.
b. Compatibility and Adhesion Test Reports: From joint sealant manufacturer, indicating the following:
   1) Materials forming joint substrates and joint-sealant backings have been tested for compatibility and adhesion with joint sealants.
   2) Interpretation of test results and written recommendations for primers and substrate preparation needed for adhesion.
c. Product Test Reports: For joint sealants, based on evaluation of comprehensive tests performed by a qualified testing agency.

4. Schedule of Tests and Inspections

5. Field Test Reports

C. Project Record Documents

1. Field test reports

2. Record Drawings

1.5 QUALITY ASSURANCE

A. Qualifications

1. Testing Agency Qualifications

a. INDOT-approved testing laboratory for asphalt or concrete, for testing indicated.

b. Qualified for asphalt testing according to ASTM D3666 for testing indicated.

c. Qualified for concrete testing according to ASTM C1077 and ASTM E329 for testing indicated, as documented according to ASTM E548.

2. Material Manufacturer Qualifications

a. Products complying with INDOT SS: Manufacturer certified by INDOT for specified Approved or Prequalified products.

b. Products not requiring INDOT SS compliance

1) Manufacturer of ready-mixed concrete products who complies with ASTM C94 requirements for production facilities and equipment.

3. Joint Sealant Qualifications

a. Source Limitations: Obtain each type of joint sealant through one source from a single manufacturer.

B. Regulatory Requirements: Comply with materials, workmanship, and other applicable requirements of agency owning or controlling right-of-way or property for paving work.

1. Measurement and payment provisions and safety program submittals included in standard specifications do not apply to this Section.

1.6 DELIVERIES, STORAGE, AND HANDLING

A. Deliver joint sealant materials to Project site in original unopened containers or bundles with labels indicating manufacturer, product name and designation, color, expiration date, pot life, curing time, and mixing instructions for multicomponent materials

1.7 PROJECT CONDITIONS

A. Traffic Control: Maintain access for vehicular and pedestrian traffic as required by regulatory agencies and for other construction activities.

B. Asphalt Materials: Do not apply asphalt materials if application surface is wet or excessively damp, if rain is imminent or expected before time required for adequate cure, or if the following conditions are not met:

1. Tack Coat: Minimum surface temperature of 60 deg F.

2. Asphalt Base Course: Minimum surface temperature of 40 deg F and rising at time of placement.

3. Asphalt Surface Course: Minimum surface temperature of 60 deg F at time of placement.

C. Do not proceed with installation of joint sealants under the following conditions:

1. When ambient and substrate temperature conditions are outside limits permitted by joint sealant manufacturer.

D. Pavement-Marking Paint: Proceed with pavement marking only on clean, dry surfaces and at a minimum ambient or surface temperature of 40 deg F for oil-based materials, 55 deg F for water-based materials, and not exceeding 95 deg F.

1.8 WARRANTIES

A. Special Warranties

1. Provide maintenance bond, in form acceptable to Owner, or fund escrow, acceptable to Owner, for maintenance of temporary surface

and installation of pavements not complete due to seasonal limitations at the time of Final Completion.

PART 2 - PRODUCTS

2.1 AGGREGATE BASE AND SURFACE MATERIALS

A. Aggregate subbase, base, and surface material shall comply with Section 301.02 of the INDOT SS.

2.2 GEOTEXTILE FABRICS

A. Geotextile fabric shall comply with Section 918.02 (Geotextile Fabric for Use Under Rip Rap) of the INDOT SS.

2.3 ASPHALT PAVEMENTS

A. Asphalt Materials, General: Asphalt materials, including aggregate, binders, and emulsions shall comply with Section 400 (Asphalt Pavement) and Section 902 (Asphalt Materials) of the INDOT SS.

B. Asphalt job mix formula for roadways, drives and sidewalks shall be previously approved for INDOT roadway projects of similar nature.

2.4 CONCRETE PAVEMENTS

A. Concrete for Driveways and Sidewalks:

1. Use Class A concrete, 3,500 psi compressive strength for driveways per ACI 318.

2. Use Class B concrete, 3,000 psi compressive strength for sidewalks per ACI 318.

B. Concrete for Roadways, Curbs, and Gutters: Concrete shall be 3,500 psi compressive strength meeting the requirements of Section 500 (Concrete Pavement) and Section 901 (PCC Materials) of the INDOT SS.

C. Curing Materials and Admixtures shall comply with Section 912 of the INDOT SS.

2.5 JOINT FILLERS

A. Joint fillers shall comply with Section 906.01 of the INDOT SS.

2.6 JOINT SEALING MATERIALS

A. Joint sealing materials shall comply with Section 906.02 of the INDOT SS.

2.7 SEAL COAT

A. Seal coat shall be TYPE II Application, RS-2, AE-90, AE-90S, or HFRS-2 as defined in INDOT Section 902.01(b).

2.8 PAVEMENT MARKING PAINT

A. Pavement marking paint shall comply with Section 909.05 (White and Yellow Traffic Paint) of the INDOT SS.

2.9 PAVEMENT MARKERS

A. Pavement markers and adhesives shall be Approved or Prequalified.

2.10 EPOXY PENETRATING SEALERS

A. Epoxy penetrating sealers shall comply with Section 909.09 (Epoxy Penetrating Sealers) of the INDOT SS.

2.11 PROPRIETARY PCC SEALERS

A. Proprietary PCC sealers shall be Approved or Prequalified.

2.12 REINFORCEMENT

A. Reinforcing steel bars, dowels, and welded wire fabric shall comply with Section 910.01 of the INDOT SS.

1. Bar Supports: Bolsters, chairs, spacers, and other devices for spacing, supporting, and fastening reinforcing bars, welded wire reinforcement, and dowels in place. Manufacture bar supports according to CRSI's "Manual of Standard Practice" from steel wire, plastic, or precast concrete of greater compressive strength than concrete, and as follows:

a. Equip wire bar supports with sand plates or horizontal runners where base material will not support chair legs.
b. For epoxy-coated reinforcement, use epoxy-coated or other dielectric-polymer-coated wire bar supports.

2.13 SIGNAGE AND ILLUMINATION

A. Signage and illumination, including posts, breakaway systems, overhead support systems, color, size, location and other material features shall comply with all applicable regulatory requirements.

2.14 HERBICIDES

A. Commercial chemical for weed control, registered by the EPA. Provide in granular, liquid, or wettable powder form.

2.15 ASPHALT SEALER

A. Asphalt pavement sealer shall be black and comply with ASTM-D3320.

2.16 GUARDRAILS AND RAILING

A. Guardrails, railing, and supports shall comply with applicable INDOT SS.

2.17 CONCRETE WHEEL STOPS

A. General

1. Size: 4-1/2 inches high by 9 inches wide by 72 inches long.

2. Provide chamfered corners and drainage slots or notches on underside and holes for anchoring to substrate.

3. Dowels: Galvanized steel, 3/4-inch diameter, 10-inch minimum length.

4. Precast, air-entrained concrete, 2500-psi minimum compressive strength.

2.18 METAL BOLLARDS

A. Fabricate metal bollards from Schedule 40 steel pipe.

1. Cap bollards with 1/4-inch-thick steel plate welded to the pipe where not being filled with concrete.

2. Where bollards are indicated to receive controls for door operators, provide necessary cutouts for controls and holes for wire.

3. Where bollards are indicated to receive light fixtures, provide necessary cutouts for fixtures and holes for wire.

B. Fabricate bollards with 3/8-inch-thick steel baseplates for bolting to concrete slab where not embedded. Drill baseplates at all four corners for 3/4-inch anchor bolts.

1. Where bollards are to be anchored to sloping concrete slabs, angle baseplates for plumb alignment of bollards.

C. Fabricate internal sleeves for removable bollards from Schedule 40 steel pipe or 1/4-inch wall-thickness steel tubing with an OD approximately 1/16 inch less than ID of bollards. Match drill sleeve and bollard for 3/4 inch steel machine bolt.

D. Prime bollards for field painting.

2.19 BOLLARD SHIELDS

A. Plastic tube shield with dome top, nominal thickness 0.125 inch.

1. Shield pipe diameter: Manufacturer's recommendation for bollard size.
2. Sleeve height: 52 inches or as indicated.
3. Sleeve Color: OSHA yellow.
4. Surface of sleeve to be smooth with round top, no ribbed or two piece systems accepted.

B. Material: Low density polyethylene thermoplastic (LDPE) tubes having ultra-violet resistance and anti static properties.

PART 3 - EXECUTION

3.1 PAVEMENTS, GENERAL

A. Examination

1. Verify that subgrade is dry and in suitable condition to begin paving.
2. Proceed with paving only after unsatisfactory conditions have been corrected.
3. Verify that utilities, traffic loop detectors, and other items requiring a cut and installation beneath the pavement surface have been completed.
4. Proof-roll prepared subbase below roadways on which pavements are to be placed with heavy pneumatic-tired equipment to identify soft pockets and areas of excess yielding.
    a. For utility line pavement repairs, completely proof-roll in one direction.
    b. For new roadways or roadway replacements, proof-roll in one direction and repeat in perpendicular direction.
    c. Limit vehicle speed to 3 mph.
    d. Proof-roll with a loaded 10-wheel tandem-axle dump truck weighing not less than 15 tons.

e. Soft spots and areas of pumping or rutting exceeding depth of 1/2 inch require correction.

5. Proceed with pavement operations only after nonconforming conditions have been corrected and surface is ready to receive pavement.

6. Remove loose material from compacted subbase surface immediately before placing pavement.

7. Provide protective insulating materials to protect subgrades against freezing temperatures or frost. Remove snow, ice, or frost from subbase surface and reinforcement before placing pavement. Do not place pavement on frozen surfaces.

8. Do not place pavement around manholes or other structures until they are at required finish elevation and alignment.

B. Cold Milling

1. Clean existing pavement surface of loose and deleterious material immediately before cold milling. Remove existing asphalt pavement by cold milling to grades and cross sections indicated.

a. Mill to depth indicated or required.
b. Mill to a uniform finished surface free of excessive gouges, grooves, and ridges.
c. Control rate of milling to prevent tearing of existing asphalt course.
d. Repair or replace curbs, manholes, and other construction damaged during cold milling.
e. Excavate and trim unbound-aggregate base course, if encountered, and keep material separate from milled hot-mix asphalt.
f. Transport milled hot-mix asphalt to asphalt recycling facility.
g. Keep milled pavement surface free of loose material and dust.

3.2 PAVEMENT REPAIR, GENERAL

A. Repair drives, parking lots, and other private pavements to a condition equal to or better than existed prior to the Work.

B. Repair sidewalks to a condition equal to or better than existed prior to the Work, subject to the approval of authorities having jurisdiction.

1. Minimum four inches (4") thick Class B concrete, set on a 4" compacted sand or aggregate base. Concrete shall be float finished with a tooled joint every 4 feet and an expansion joint every 48 feet. Unless shown otherwise, wire mesh shall be used and shall be 6 x 6 x W 2.9/2.9 gauge W.W. mesh.

C. Saw cut perimeter of patch and excavate existing pavement section to sound base. Excavate rectangular or trapezoidal patches, extending 12 inches into adjacent sound pavement, unless otherwise indicated. Cut excavation faces vertically. Remove excavated material. Recompact existing unbound-aggregate base course to form new subgrade.

D. Curb and Gutters

1. Meet requirements of authorities having jurisdiction. At a minimum:
   a. Repair curbs and gutters to original profile and finish. Match elevations.
   b. Provide minimum six inches (6") base under curb and gutter.
   c. Saw cut edges.
   d. Material and construction shall comply with curb replacement requirements of Section 605 of the INDOT SS.

3.3 AGGREGATE SUBBASE, BASE, AND SHOULDERS

A. Place aggregate subbase and base courses on prepared subgrades free of mud, frost, snow, or ice.

B. Place aggregate subbase in compliance with Sections 302.03 through 302.07 of the INDOT SS.

C. Place base in compliance with Sections 301.03 through 301.08 of the INDOT SS.

D. Pavement Shoulders: Place shoulders along edges of subbase and base course to prevent lateral movement of pavement. Construct shoulders, at least 12 inches wide, of satisfactory soil materials and compact

simultaneously with each subbase and base lift to not less than 95 percent of maximum dry unit weight according to ASTM D1557.

3.4 GEOTEXTILE FABRIC

A. Install geotextile fabric in accordance with manufacturer's recommendations and Section 616.11 (Installation of Geotextile Under Riprap) of the INDOT SS.

3.5 SIDEWALK BASE

A. Provide four inches (4") level, compacted sand base under concrete sidewalks.

3.6 AGGREGATE DRIVING SURFACES

A. Subgrade Treatment: Complete a Type II subgrade treatment in accordance with INDOT Section 207.

B. Place, level, and compact aggregate surface material in accordance with Section 303 of the INDOT SS.

C. Apply a Type 5 seal coat in accordance with INDOT Section 404 where indicated on the Drawings.

3.7 ASPHALT PAVING

A. Asphalt Pavement Repairs, Additional

1. Subbases on Soils: Place eight inches (8") of compacted aggregate base in the repair, unless otherwise indicated.

2. Portland Cement Concrete Pavement: Break cracked slabs and roll as required to reseat concrete pieces firmly.

    a. Pump hot undersealing asphalt under rocking slab until slab is stabilized or, if necessary, crack slab into pieces and roll to reseat pieces firmly.
    b. Remove disintegrated or badly cracked pavement. Excavate rectangular or trapezoidal patches, extending into adjacent

sound pavement, unless otherwise indicated. Cut excavation faces vertically. Recompact existing unbound-aggregate base course to form new subgrade.

3. Tack Coat: Coat vertical surfaces abutting HMAC patches. Apply uniformly to vertical surfaces abutting or projecting into new, hot-mix asphalt paving at a rate of 0.05 to 0.15 gal./sq. yd.
    a. Allow tack coat to cure undisturbed before applying hot-mix asphalt paving.
    b. Avoid smearing or staining adjoining surfaces, appurtenances, and surroundings. Remove spillages and clean affected surfaces.
4. Leveling Course: Where depressions deeper than 1 inch in exist in pavements, install and compact leveling course consisting of hot-mix asphalt surface course to level sags and fill depressions.
    a. Install leveling wedges in compacted lifts not exceeding 3 inches thick.
5. Crack and Joint Filling: Remove existing joint filler material from cracks or joints to a depth of 1/4 inch.
    a. Clean cracks and joints in existing hot-mix asphalt pavement.
    b. Use emulsified-asphalt slurry to seal cracks and joints less than 1/4 inch wide. Fill flush with surface of existing pavement and remove excess.
    c. Use hot-applied joint sealant to seal cracks and joints more than 1/4 inch wide. Fill flush with surface of existing pavement and remove excess.
6. Patching: Partially fill excavated pavements with hot-mix asphalt base mix and, while still hot, compact. Cover asphalt base course with compacted, hot-mix surface layer finished flush with adjacent surfaces.
    a. Base Mix: 275 lb./syd. of HMA Type B, Intermediate in accordance with INDOT SS.
    b. Surface Layer: 165 lb./syd. of HMA, Type B, Surface in accordance with INDOT SS.
    c. All paving shall be done in accordance with Section 305 of the INDOT SS.

B. Surface Preparation

1. General: Immediately before placing asphalt materials, remove loose and deleterious material from substrate surfaces. Ensure that prepared subgrade is ready to receive paving.

2. Herbicide Treatment: Apply herbicide according to manufacturer's recommended rates and written application instructions. Apply to dry, prepared subgrade or surface of compacted-aggregate base before applying paving materials.

    a. Mix herbicide with prime coat if formulated by manufacturer for that purpose.

3. Tack Coat: Apply uniformly to surfaces of existing pavement at a rate of 0.05 to 0.15 gal./sq. yd.

    a. Allow tack coat to cure undisturbed before applying hot-mix asphalt paving.
    b. Avoid smearing or staining adjoining surfaces, appurtenances, and surroundings. Remove spillages and clean affected surfaces.

C. HMA Placement

1. Machine place hot-mix asphalt on prepared surface, spread uniformly, and strike off. Place asphalt mix by hand to areas inaccessible to equipment in a manner that prevents segregation of mix. Place each course to required grade, cross section, and thickness when compacted.

    a. Place hot-mix asphalt base course in number of lifts and thicknesses indicated by INDOT SS.
    b. Place hot-mix asphalt surface course in single lift.
    c. HMA temperature shall meet or exceed requirements in Section 400 of INDOT SS.
    d. Apply surface course and compact with roller in accordance with Section 400 of INDOT SS.

2. Place paving in consecutive strips not less than 10 feet wide unless infill edge strips of a lesser width are required.

    a. After first strip has been placed and rolled, place succeeding strips and extend rolling to overlap previous strips. Complete

a section of asphalt base course before placing asphalt surface course.

3. Promptly correct surface irregularities in paving course behind paver. Use suitable hand tools to remove excess material forming high spots. Fill depressions with hot-mix asphalt to prevent segregation of mix; use suitable hand tools to smooth surface. Match grade of existing pavement at transitions.

D. Joints

1. Construct joints to ensure a continuous bond between adjoining paving sections. Construct joints free of depressions, with same texture and smoothness as other sections of hot-mix asphalt course.
    a. Clean contact surfaces and apply tack coat to joints.
    b. Offset longitudinal joints, in successive courses, a minimum of 6 inches.
    c. Offset transverse joints, in successive courses, a minimum of 24 inches.
    d. Construct transverse joints at each point where paver ends a day's work and resumes work at a subsequent time.
    e. Compact joints as soon as hot-mix asphalt will bear roller weight without excessive displacement.
    f. Compact asphalt at joints to a density within 2 percent of specified course density.

E. Compaction

1. General: Begin compaction as soon as placed hot-mix paving will bear roller weight without excessive displacement. Compact hot-mix paving with hot, hand tampers or with vibratory-plate compactors in areas inaccessible to rollers.
    a. Complete compaction before mix temperature cools to 185 deg F.
2. Breakdown Rolling: Complete breakdown or initial rolling immediately after rolling joints and outside edge. Examine surface immediately after breakdown rolling for indicated crown, grade, and smoothness. Correct laydown and rolling operations to comply with requirements.

3. Intermediate Rolling: Begin intermediate rolling immediately after breakdown rolling while hot-mix asphalt is still hot enough to achieve specified density. Continue rolling until hot-mix asphalt course has been uniformly compacted to the following density:
    a. Average Density: greater than or equal to 93.0 percent.
4. Finish Rolling: Finish roll paved surfaces to remove roller marks while hot-mix asphalt is still warm.
5. Edge Shaping: While surface is being compacted and finished, trim edges of pavement to proper alignment. Bevel edges while asphalt is still hot; compact thoroughly.
6. Repairs: Remove paved areas that are defective or contaminated with foreign materials and replace with fresh, hot-mix asphalt. Compact by rolling to specified density and surface smoothness.
7. Protection: After final rolling, do not permit vehicular traffic on pavement until it has cooled and hardened.
8. Erect barricades to protect paving from traffic until mixture has cooled enough not to become marked.

F. Installation Tolerances
1. Pavement Thickness: Compact each course to produce the thickness indicated within the following tolerances:
    a. Base Course: Plus or minus 1/2 inch.
    b. Surface Course: Plus 1/4 inch, no minus.
2. Pavement Surface Smoothness: Compact each course to produce a surface smoothness within the following tolerances as determined by using a 10-foot straightedge applied transversely or longitudinally to paved areas:
    a. Base Course: 1/4 inch.
    b. Surface Course: 1/8 inch.
    c. Crowned Surfaces: Test with crowned template centered and at right angle to crown. Maximum allowable variance from template is 1/4 inch.

G. Field Quality Control

1. Testing Agency: Engage an INDOT certified testing agency to perform tests and inspections.

2. Thickness: In-place compacted thickness of hot-mix asphalt courses will be determined according to ASTM D3549.

3. Surface Smoothness: Finished surface of each pavement course will be tested for compliance with smoothness tolerances.

4. In-Place Density: Testing agency will take samples of uncompacted paving mixtures and compacted pavement according to ASTM D979 or AASHTO T 168.
    a. Reference maximum theoretical density will be determined by averaging results from four samples of hot-mix asphalt-paving mixture delivered daily to site, prepared according to ASTM D2041, and compacted according to job-mix specifications.
    b. In-place density of compacted pavement will be determined by testing core samples according to ASTM D1188 or ASTM D2726.
    c. One core sample will be taken for every 1000 sq. yd. or less of installed pavement, with no fewer than 3 cores taken. Sample at locations indicated by Engineer.
    d. Field density of in-place compacted pavement may also be determined by nuclear method according to ASTM D2950 and correlated with ASTM D1188 or ASTM D2726.

5. Replace and compact hot-mix asphalt where core tests were taken.

6. Remove and replace or install additional hot-mix asphalt where test results or measurements indicate that it does not comply with specified requirements.

H. Asphalt Sealer

1. Apply two (2) coats of asphalt sealer 30 days after asphalt laying and all field quality control is complete.

2. Apply first coat in lengthwise fashion to pavement surface.

3. Apply second coat in cross wise fashion (90 degrees to direction of first coat).

4. Apply sealer at uniform rate recommended by manufacturer.

3.8 CONCRETE PAVING

A. Edge Forms And Screed Construction

1. Set, brace, and secure edge forms, bulkheads, and intermediate screed guides for pavement to required lines, grades, and elevations. Install forms to allow continuous progress of work and so forms can remain in place at least 24 hours after concrete placement.

2. Clean forms after each use and coat with form-release agent to ensure separation from concrete without damage.

B. Steel Reinforcement

1. General: Comply with INDOT SS and CRSI's "Manual of Standard Practice" for fabricating, placing, and supporting reinforcement.

2. Clean reinforcement of loose rust and mill scale, earth, ice, or other bond-reducing materials.

3. Arrange, space, and securely tie bars and bar supports to hold reinforcement in position during concrete placement. Maintain minimum cover to reinforcement.

4. Install welded wire reinforcement in lengths as long as practicable. Lap adjoining pieces at least one full mesh, and lace splices with wire. Offset laps of adjoining widths to prevent continuous laps in either direction.

5. Zinc-Coated Reinforcement: Use galvanized steel wire ties to fasten zinc-coated reinforcement. Repair cut and damaged zinc coatings with zinc repair material.

6. Epoxy-Coated Reinforcement: Use epoxy-coated steel wire ties to fasten epoxy-coated reinforcement. Repair cut and damaged epoxy coatings with epoxy repair coating according to ASTM D3963.

7. Install fabricated bar mats in lengths as long as practicable. Handle units to keep them flat and free of distortions. Straighten bends,

kinks, and other irregularities, or replace units as required before placement. Set mats for a minimum 2-inch overlap of adjacent mats.

C. Joints

1. General: Form construction, isolation, and contraction joints and tool edgings true to line with faces perpendicular to surface plane of concrete. Construct transverse joints at right angles to centerline, unless otherwise indicated.

    a. When joining existing pavement, place transverse joints to align with previously placed joints, unless otherwise indicated.

2. Construction Joints: Set construction joints at side and end terminations of pavement and at locations where pavement operations are stopped for more than one-half hour unless pavement terminates at isolation joints.

    a. Continue steel reinforcement across construction joints, unless otherwise indicated. Do not continue reinforcement through sides of pavement strips, unless otherwise indicated.
    b. Provide tie bars at sides of pavement strips where indicated.
    c. Butt Joints: Use bonding agent or epoxy bonding adhesive in compliance with INDOT SS at joint locations where fresh concrete is placed against hardened or partially hardened concrete surfaces.
    d. Keyed Joints: Provide preformed keyway-section forms or bulkhead forms with keys, unless otherwise indicated. Embed keys at least 1-1/2 inches into concrete.
    e. Doweled Joints: Install dowel bars and support assemblies at joints where indicated. Lubricate or asphalt-coat one-half of dowel length to prevent concrete bonding to one side of joint.

3. Isolation Joints: Form isolation joints of preformed joint-filler strips abutting concrete curbs, catch basins, manholes, inlets, structures, walks, other fixed objects, and where indicated.

    a. Locate expansion joints in accordance with INDOT SS, unless otherwise indicated.
    b. Extend joint fillers full width and depth of joint.
    c. Terminate joint filler not less than 1/2 inch or more than 1 inch below finished surface if joint sealant is indicated.

d. Place top of joint filler flush with finished concrete surface if joint sealant is not indicated.
e. Furnish joint fillers in one-piece lengths. Where more than one length is required, lace or clip joint-filler sections together.
f. Protect top edge of joint filler during concrete placement with metal, plastic, or other temporary preformed cap. Remove protective cap after concrete has been placed on both sides of joint.

4. Contraction Joints: Form weakened-plane contraction joints, sectioning concrete into areas as indicated. Construct contraction joints for a depth equal to at least one-fourth of the concrete thickness, matching jointing of existing adjacent concrete pavement where applicable, as follows:

a. Grooved Joints: Form contraction joints after initial floating by grooving and finishing each edge of joint with grooving tool to a 3/8-inch radius. Repeat grooving of contraction joints after applying surface finishes. Eliminate groover marks on concrete surfaces.
b. Sawed Joints: Form contraction joints with power saws equipped with shatterproof abrasive or diamond-rimmed blades. Cut 1/8-inch wide joints into concrete when cutting action will not tear, abrade, or otherwise damage surface and before developing random contraction cracks.
c. Doweled Contraction Joints: Install dowel bars and support assemblies at joints where indicated. Lubricate or asphalt coat one-half of dowel length to prevent concrete bonding to one side of joint.

5. Edging: Tool edges of pavement, gutters, curbs, and joints in concrete after initial floating with an edging tool to a 3/8-inch radius. Repeat tooling of edges after applying surface finishes. Eliminate tool marks on concrete surfaces.

D. Concrete Placement

1. Inspection: Before placing concrete, inspect and complete formwork installation, steel reinforcement, and items to be embedded or cast in. Notify other trades to permit installation of their work.

2. Moisten subbase to provide a uniform dampened condition at time concrete is placed.

3. Comply with INDOT SS and ACI 301 requirements for measuring, mixing, transporting, and placing concrete.

4. Do not add water to fresh concrete after testing.

5. Deposit and spread concrete in a continuous operation between transverse joints. Do not push or drag concrete into place or use vibrators to move concrete into place.

6. Consolidate concrete according to INDOT SS by mechanical vibrating equipment supplemented by hand spading, rodding, or tamping.

    a. Consolidate concrete along face of forms and adjacent to transverse joints with an internal vibrator. Keep vibrator away from joint assemblies, reinforcement, or side forms. Use only square-faced shovels for hand spreading and consolidation. Consolidate with care to prevent dislocating reinforcement, dowels, and joint devices.

7. Screed pavement surfaces with a straightedge and strike off.

8. Commence initial floating using bull floats or darbies to impart an open textured and uniform surface plane before excess moisture or bleed water appears on the surface. Do not further disturb concrete surfaces before beginning finishing operations or spreading surface treatments.

9. Curbs and Gutters

    a. Produce curbs and gutters to required cross section, lines, grades, finish, and jointing as specified for formed concrete.
    b. When automatic machine placement is used for curb and gutter placement, submit revised mix design and laboratory test results that meet or exceed requirements. If results are not approved, remove and replace with formed concrete.

10. Slip-Form Pavers: When automatic machine placement is used for pavement, submit revised mix design and laboratory test results that meet or exceed requirements. Produce pavement to required

thickness, lines, grades, finish, and jointing as required for formed pavement.

a. Compact subbase and prepare subgrade of sufficient width to prevent displacement of paver machine during operations.

11. When adjoining pavement lanes are placed in separate pours, do not operate equipment on concrete until pavement has attained 85 percent of its 28-day compressive strength.

12. Cold-Weather Placement: Comply with INDOT SS and ACI 306.1 and as follows. Protect concrete work from physical damage or reduced strength that could be caused by frost, freezing actions, or low temperatures.

    a. When air temperature has fallen to or is expected to fall below 40 deg F, uniformly heat water and aggregates before mixing to obtain a concrete mixture temperature of not less than 50 deg F and not more than 80 deg F at point of placement.
    b. Do not use frozen materials or materials containing ice or snow.
    c. Do not use calcium chloride, salt, or other materials containing antifreeze agents or chemical accelerators unless otherwise specified and approved in mix designs.

13. Hot-Weather Placement: Comply with INDOT SS and ACI 301 and as follows when hot-weather conditions exist:

    a. Cool ingredients before mixing to maintain concrete temperature below 90 deg F at time of placement. Chilled mixing water or chopped ice may be used to control temperature, provided water equivalent of ice is calculated to total amount of mixing water. Using liquid nitrogen to cool concrete is Contractor's option.
    b. Cover steel reinforcement with water-soaked burlap so steel temperature will not exceed ambient air temperature immediately before embedding in concrete.
    c. Fog-spray forms, steel reinforcement, and subgrade just before placing concrete. Keep subgrade moisture uniform without standing water, soft spots, or dry areas.

E. Float Finishing

1. General: Do not add water to concrete surfaces during finishing operations.

2. Float Finish: Begin the second floating operation when bleed-water sheen has disappeared and concrete surface has stiffened sufficiently to permit operations. Float surface with power-driven floats, or by hand floating if area is small or inaccessible to power units. Finish surfaces to true planes. Cut down high spots and fill low spots. Refloat surface immediately to uniform granular texture.

    a. Burlap Finish: Drag a seamless strip of damp burlap across float-finished concrete, perpendicular to line of traffic, to provide a uniform, gritty texture.
    b. Medium-to-Fine-Textured Broom Finish: Draw a soft bristle broom across float-finished concrete surface perpendicular to line of traffic to provide a uniform, fine-line texture.
    c. Medium-to-Coarse-Textured Broom Finish: Provide a coarse finish by striating float-finished concrete surface 1/16 to 1/8 inch deep with a stiff-bristled broom, perpendicular to line of traffic.

F. Concrete Protection And Curing

1. General: Protect freshly placed concrete from premature drying and excessive cold or hot temperatures.

2. Comply with INDOT SS and ACI 306.1 for cold-weather protection.

3. Evaporation Retarder: Apply evaporation retarder to concrete surfaces if hot, dry, or windy conditions cause moisture loss approaching 0.2 lb/sq. ft. x h before and during finishing operations. Apply according to manufacturer's written instructions after placing, screeding, and bull floating or darbying concrete, but before float finishing.

4. Begin curing after finishing concrete but not before free water has disappeared from concrete surface.

5. Curing Methods: Cure concrete by moisture curing, moisture-retaining-cover curing, curing compound, or a combination of these as follows:

a. Moist Curing: Keep surfaces continuously moist for not less than seven days with the following materials:
   1) Water.
   2) Continuous water-fog spray.
   3) Absorptive cover, water saturated and kept continuously wet. Cover concrete surfaces and edges with 12-inch lap over adjacent absorptive covers.

b. Moisture-Retaining-Cover Curing: Cover concrete surfaces with moisture-retaining cover for curing concrete, placed in widest practicable width, with sides and ends lapped at least 12 inches, and sealed by waterproof tape or adhesive. Immediately repair any holes or tears during curing period using cover material and waterproof tape.

c. Curing Compound: Apply uniformly in continuous operation by power spray or roller according to manufacturer's written instructions. Recoat areas subjected to heavy rainfall within three hours after initial application. Maintain continuity of coating and repair damage during curing period.

G. Installation Tolerances

1. Comply with tolerances of INDOT SS, ACI 117 and as follows:

   a. Elevation: 1/4 inch.
   b. Thickness: Plus 3/8 inch, minus 1/4 inch.
   c. Surface: Gap below 10-foot long, unleveled straightedge not to exceed 1/4 inch.
   d. Lateral Alignment and Spacing of Tie Bars and Dowels: 1 inch.
   e. Vertical Alignment of Tie Bars and Dowels: 1/4 inch.
   f. Alignment of Tie-Bar End Relative to Line Perpendicular to Pavement Edge: 1/2 inch.
   g. Alignment of Dowel-Bar End Relative to Line Perpendicular to Pavement Edge: Length of dowel 1/4 inch per 12 inches.
   h. Joint Spacing: 3 inches.
   i. Contraction Joint Depth: Plus 1/4 inch, no minus.
   j. Joint Width: Plus 1/8 inch, no minus.

H. Field Quality Control

1. Testing Agency: Engage a qualified independent testing and inspecting agency to perform field tests and inspections and prepare test reports.

2. Testing Services: Testing of composite samples of fresh concrete obtained according to ASTM C172 shall be performed according to the following requirements:

    a. Testing Frequency: Obtain at least 1 composite sample for each 100 cu. yd. or fraction thereof of each concrete mix placed each day.
        1) When frequency of testing will provide fewer than five compressive-strength tests for each concrete mixture, testing shall be conducted from at least five randomly selected batches or from each batch if fewer than five are used.
    b. Slump: ASTM C143; one test at point of placement for each composite sample, but not less than one test for each day's pour of each concrete mix. Perform additional tests when concrete consistency appears to change.
    c. Air Content: ASTM C231, pressure method; one test for each composite sample, but not less than one test for each day's pour of each concrete mix.
    d. Concrete Temperature: ASTM C1064; one test hourly when air temperature is 40 deg F and below and when 80 deg F and above, and one test for each composite sample.
    e. Compression Test Specimens: ASTM C31; cast and laboratory cure one set of three standard cylinder specimens for each composite sample.
    f. Compressive-Strength Tests: ASTM C39; test 1 specimen at 7 days and 2 specimens at 28 days.
        1) A compressive-strength test shall be the average compressive strength from 2 specimens obtained from same composite sample and tested at 28 days.

3. Strength of each concrete mix will be satisfactory if average of any 3 consecutive compressive-strength tests equals or exceeds specified compressive strength and no compressive-strength test value falls below specified compressive strength by more than 500 psi.

4. Test results shall be reported in writing to Engineer, concrete manufacturer, and Contractor within 48 hours of testing. Reports of compressive-strength tests shall contain Project identification name and number, date of concrete placement, name of concrete testing and inspecting agency, location of concrete batch in Work, design compressive strength at 28 days, concrete mixture proportions and materials, compressive breaking strength, and type of break for both 7- and 28-day tests.

5. Nondestructive Testing: Impact hammer, sonoscope, or other nondestructive device may be permitted by Engineer but will not be used as sole basis for approval or rejection of concrete.

6. Additional Tests: Testing and inspecting agency shall make additional tests of concrete when test results indicate that slump, air entrainment, compressive strengths, or other requirements have not been met, as directed by Engineer.

7. Remove and replace concrete pavement where test results indicate that it does not comply with specified requirements.

8. Additional testing and inspecting, at Contractor's expense, will be performed to determine compliance of replaced or additional work with specified requirements

I. Repairs And Protection

1. Remove and replace concrete pavement that is broken, damaged, or defective or that does not comply with requirements in this Section.

2. Drill test cores, where directed by Engineer, when necessary to determine magnitude of cracks or defective areas. Fill drilled core holes in satisfactory pavement areas with portland cement concrete bonded to pavement with epoxy adhesive.

3. Protect concrete from damage. Exclude traffic from pavement for at least 14 days after placement. When construction traffic is permitted, maintain pavement as clean as possible by removing surface stains and spillage of materials as they occur.

4. Maintain concrete pavement free of stains, discoloration, dirt, and other foreign material. Sweep concrete pavement not more than two days before date scheduled for Substantial Completion inspections.

3.9 PAVEMENT MARKING

A. Allow paving to age for 30 days before starting permanent pavement marking.

B. Sweep and clean surface to eliminate loose material and dust.

C. Apply paint with mechanical equipment to produce pavement markings, of dimensions indicated, with uniform, straight edges. Apply at manufacturer's recommended rates to provide a minimum wet film thickness of 15 mils.

D. Install pavement markings in accordance with Section 808 of the INDOT SS.

3.10 WHEEL STOPS

A. Install wheel stops in bed of adhesive as recommended by manufacturer.

B. Securely attach wheel stops to pavement with not less than two galvanized-steel dowels embedded at one-quarter to one-third points. Securely install dowels into pavement and bond to wheel stop. Recess head of dowel beneath top of wheel stop.

END OF SECTION 02700

02821

Chain Link Fences and Gates

SECTION 02821
CHAIN LINK FENCES AND GATES

PART 1 - GENERAL

1.1 SUMMARY

A. This Section includes the following:

1. Chain-Link Fences: Industrial.

2. Gates:

   a. Swing.
   b. Motor-operated horizontal sliding.

3. Fence-mounted panel signs.

B. Related Sections include the following:

1. Section 02300 - Earthwork for site excavation, fill, and backfill where chain-link fences and gates are located.

2. Section 03300 - Cast-in-Place Concrete for post concrete fill and equipment bases/pads for gate operators and controls.

1.2 PERFORMANCE REQUIREMENTS

A. Structural Performance: Provide chain-link fences and gates capable of withstanding the effects of gravity loads and the following loads and stresses within limits and under conditions indicated:

1. Minimum Post Size and Maximum Spacing for Wind Velocity Pressure: Determine based on mesh size and pattern specified, and on the following minimum design wind pressures and according to CLFMI WLG 2445:

   a. Wind Speed: 100 mph.
   b. Fence Height: as indicated on Drawings.
   c. Line Post Group: ASTM F1043 or Schedule 40 steel pipe.
   d. Wind Exposure Category: B.

2. Determine minimum post size, group, and section according to ASTM F1043 for framework up to 12 feet high and post spacing not to exceed 10 feet.

B. Lightning Protection System: Maximum grounding-resistance value of 25 ohms under normal dry conditions.

1.3 SUBMITTALS

A. Action Submittals

1. Product Data: Include construction details, material descriptions, dimensions of individual components and profiles, and finishes for chain-link fences and gates.

   a. Fence and gate posts, rails, and fittings.
   b. Chain-link fabric, reinforcements, and attachments.
   c. Structural analysis data.
   d. Gates and hardware.
   e. Accessories: Barbed wire
   f. Gate operators, including operating instructions.
   g. Motors: Show nameplate data, ratings, characteristics, and mounting arrangements.
   h. Manufacturer's color charts or 6-inch lengths of actual units showing the full range of colors available for components with factory-applied color finishes.

2. Shop Drawings: Include plans, elevations, sections, details, and attachments to other work. Show accessories, hardware, gate operation, and operational clearances.

   a. Gate Operator: Show locations and details for installing operator components, switches, and controls. Indicate motor size, electrical characteristics, drive arrangement, mounting, and grounding provisions.
   b. Wiring Diagrams: For power, signal, and control wiring.

B. Informational Submittals

1. Product Certificates.

2. Strength test results for framing according to ASTM F1043.

3. Qualification Data.
    a. Fence installer.
    b. Fence testing agency.
4. Material Certificates.
5. Schedule of Tests and Inspections.
    a. Fence grounding test.
6. Field Test Reports.
    a. Fence grounding test.
7. Design Data.
8. Manufacturers Installation and Maintenance Data.

C. Project Record Documents
1. Product Data.
2. Field Test Reports.
3. Operation and Maintenance Data.
4. Record Drawings.

1.4 QUALITY ASSURANCE

A. Installer Qualifications: An experienced installer who has completed chain-link fences and gates similar in material, design, and extent to those indicated for this Project and whose work has resulted in construction with a record of successful in-service performance.

B. Electrical Components, Devices, and Accessories: Listed and labeled as defined in NFPA 70, by a qualified testing agency, and marked for intended location and application.

C. Emergency Access Requirements: Comply with requirements of authorities having jurisdiction for gates with automatic gate operators serving as a required means of access.

1.5 PROJECT CONDITIONS

A. Field Measurements: Verify layout information for chain-link fences and gates shown on Drawings in relation to property survey and existing structures. Verify dimensions by field measurements.

1.6 SPECIAL WARRANTY

A. Special Warranty: Manufacturer's standard form in which [manufacturer] [Installer] agrees to repair or replace components of chain-link fences and gates that fail in materials or workmanship within specified warranty period.

1. Failures include, but are not limited to, the following:
    a. Faulty operation of gate operators and controls.
    b. Deterioration of metals, metal finishes, and other materials beyond normal weathering.
2. Warranty Period: Five years from date of Substantial Completion.

PART 2 - PRODUCTS

2.1 GENERAL

A. All fence post and fence fabric sizes are intended to be nominal.

2.2 CHAIN-LINK FENCE FABRIC

A. General: Height indicated on Drawings. Provide fabric in one-piece heights measured between top and bottom of outer edge of selvage knuckle or twist. Comply with ASTM A392, CLFMI CLF 2445, and requirements indicated below:

1. Steel Wire Fabric: 9 Gauge Metallic coated wire.
    a. Mesh Size: 2 inches.
    b. Weight of Metallic (Zinc) Coating: ASTM A392, Type II, Class 1, 1.2 oz./sq. ft. with zinc coating applied after weaving.

c. Coat selvage ends of fabric that is metallic coated before the weaving process with manufacturer's standard clear protective coating.

B. Selvage: Knuckled top and bottom.

2.3 FENCE FRAMING

A. General: Comply with ASTM F1043, Heavy Industrial Fence for framing and the following:

1. Group IA round steel pipe, Schedule 40.

2. Type A external and internal coatings.

B. Height: As indicated on the Drawings.

C. Fence Frame Size

1. Top Rail: 1-5/8 inches.

2. Line Post: 2-3/8 inches.

3. End, Corner, or Pull Post: 2-7/8 inches.

D. Gate Post Sizes

1. Swing Gate Post: In accordance with ASTM F900.

2. Horizontal-Slide Gate Post: In accordance with ASTM F1184.

2.4 TENSION WIRE

A. General: Provide horizontal tension wire at the following locations:

1. Bottom of fence fabric.

B. Metallic-Coated Steel Wire: 0.177-inch-diameter, marcelled tension wire complying with ASTM A817, ASTM A824, and the following:

1. Metallic Coating: Type II, zinc coated (galvanized) by hot-dip process matching chain-link fabric coating weight.

2.5 SWING GATES

A. General: Comply with ASTM F900.

1. Metal Pipe and Tubing: Galvanized steel. Comply with ASTM F1043 and ASTM F1083 for materials and protective coatings.

B. Frames and Bracing: Fabricate members from galvanized steel tubing with outside dimension and weight according to ASTM F900.

1. Gate Fabric Height: 2 inches less than adjacent fence height.

2. Leaf Width: As indicated.

3. Frame Members:

a. Tubular Steel: 1.90 inches round.

C. Frame Corner Construction:

1. Welded

2. Adjustable truss rods 3/8-inch-diameter for panels 5 feet wide or wider.

D. Extended Gate Posts and Frame Members: Extend gate posts and frame end members above top of chain-link fabric at both ends of gate frame as required to attach barbed wire assemblies.

E. Hardware: Locking devices, hangers, and stops fabricated from galvanized steel. Fabricate latches with integral eye openings for padlocking; padlock accessible from both sides of gate.

1. Furnish mated locks and five sets of keys for Owner.

2.6 HORIZONTAL SLIDE GATES

A. General: Comply with ASTM F1184 for gate posts and single sliding gate types. Provide automated vehicular gates that comply with ASTM F 2200.

1. Classification: Type II Cantilever Slide, Class 1 with external roller assemblies.

a. Gate Frame Width and Height: As indicated.

B. Pipe and Tubing:

1. Zinc-Coated Steel: Protective coating and finish to match fence framing.

2. Gate Posts: Comply with ASTM F 1184. Provide round tubular steel posts.

3. Gate Frames and Bracing: Round tubular steel.

C. Frame Construction: Welded.

D. Extended Gate Posts and Frame Members: Extend gate posts and frame end members above top of chain-link fabric at both ends of gate frame 12 inches as required to attach barbed wire assemblies.

E. Hardware

1. Hangers, roller assemblies, and stops fabricated from galvanized steel. Provide safety guards on all roller assemblies.

2.7 FITTINGS

A. General: Comply with ASTM F626.

B. Post and Line Caps: Provide for each post.

1. Line post caps with loop to receive tension wire or top rail.

C. Rail and Brace Ends: Attach rails securely to each gate, corner, pull, and end post.

D. Rail Fittings: Provide the following:

1. Top Rail Sleeves: Pressed-steel or round-steel tubing not less than 6 inches long.

2. Rail Clamps: Line and corner boulevard clamps for connecting rails in the fence line-to-line posts.

E. Tension and Brace Bands: Pressed steel or Aluminum Alloy 6063.

F. Tension Bars: Steel or aluminum, length not less than 2 inches shorter than full height of chain-link fabric. Provide one bar for each gate and end post, and two for each corner and pull post, unless fabric is integrally woven into post.

G. Truss Rod Assemblies: Steel, hot-dip galvanized after threading rod and turnbuckle or other means of adjustment.

H. Barbed Wire Arms: Hot-Dip Galvanized pressed steel, with clips, slots, or other means for attaching strands of barbed wire, integral with post cap for each post, unless otherwise indicated.

I. Tie Wires, Clips, and Fasteners: According to ASTM F626.

J. Finish:

1. Metallic Coating for Pressed Steel: Not less than 1.2 oz. /sq. ft. zinc.

2. Aluminum: Mill finish.

2.8 BARBED WIRE

A. Zinc-Coated Steel Barbed Wire: Comply with ASTM A121, Chain-Link Fence grade for the following three-stranded barbed wire:

1. Standard Size and Construction: 0.099-inch-diameter line wire with 0.080-inch- diameter, 4-point round barbs spaced not more than 4 inches o.c.

2.9 GATE OPERATORS

A. General: Provide factory-assembled automatic operating system designed for gate size, type, weight, and operation frequency. Provide operation control system with characteristics suitable for Project conditions, with remote-control stations, safety devices, and weatherproof enclosures; coordinate electrical requirements with building electrical system.

1. Provide operator designed so motor may be removed without disturbing limit-switch adjustment and without affecting auxiliary emergency operator.

2. Provide operator with UL approval.

3. Provide electronic components with built-in troubleshooting diagnostic feature.

4. Provide unit designed and wired for both right-hand/left-hand opening, permitting universal installation.

B. Comply with NFPA 70.

C. UL Standard: Fabricate and label gate operators to comply with UL 325, Class III.

D. Motor Characteristics: Sufficient to start, accelerate, and operate connected loads at designated speeds, within installed environment, with indicated operating sequence, and without exceeding nameplate rating or considering service factor. Comply with NEMA MG 1 and the following:

1. Voltage: 120 V.

2. Horsepower: 1/2 minimum.

3. Enclosure: Open drip proof.

4. Duty: Continuous duty at ambient temperature of 105 deg F and at altitude of 3300 feet above sea level.

5. Service Factor: 1.15 for open drip proof motors.

6. Phase: One.

E. Gate Operators: Concrete equipment base/pad mounted and as follows:

1. Mechanical Slide Gate Operators:

a. Duty: Heavy duty, commercial/industrial.
b. Gate Speed: Minimum 60 feet per minute.
c. Frequency of Use: 10 cycles per hour.
d. Operating Type: Roller chain, with manual release.
e. Drive Type: Enclosed worm gear and chain-and-sprocket reducers, roller-chain drive.

F. Remote Controls: Electric controls separated from gate and motor and drive mechanism, with NEMA ICS 6, Type 1 enclosure for pedestal mounting and with space for additional optional equipment. Provide the following remote-control device(s):

1. Proximity Card Reader: Functions only when authorized card is presented. Programmable, magnetic multiple-code system; face-lighted unit fully visible at night.
    a. Reader Type: Proximity.
    b. Features: Capable of monitoring and auditing gate activity.
    c. Match card requirements with intrusion detection system so that the same card operates gate and intrusion detection system.
2. Telephone Entry System: Hands-free voice-communication system for connection to building telephone system with digital-entry code activation of gate operator and auxiliary keypad entry.
    a. Residential System: Designed to be wired to same line with telephone.
    b. Auxiliary Keypad: Multiple programmable code capability of not less than five possible individual codes, consisting of one- to seven-digit codes.
        1) Features: Capable of monitoring and auditing gate activity.
        2) Face-lighted unit with keyless-membrane keypad fully visible at night.
3. Vehicle Loop Detector: System including automatic closing timer with adjustable time delay before closing and loop detector designed to open gate upon the approach of a vehicle from inside the Site. Provide electronic detector with adjustable detection patterns, adjustable sensitivity and frequency settings, and panel indicator light designed to detect presence or transit of a vehicle over an embedded loop of wire and to emit a signal activating the gate operator. Provide number of loops consisting of multiple strands of wire, number of turns, loop size, and method of placement as recommended in writing by detection system manufacturer for function indicated.
    a. Loop: Wire, factory pre-formed or indicated for field assembly , for pave-over installation.

G. Obstruction Detection Devices: Provide each motorized gate with automatic safety sensor(s). Activation of sensor(s) causes operator to immediately function as follows:

1. Action: Reverse gate in both opening and closing cycles and hold until clear of obstruction.

2. Internal Sensor: Built-in torque or current monitor senses gate is obstructed.

3. Photoelectric/Infrared Sensor System: Designed to detect an obstruction in gate's path when infrared beam in the zone pattern is interrupted.

H. Limit Switches: Adjustable switches, interlocked with motor controls and set to automatically stop gate at fully retracted and fully extended positions.

1. Type: Integral fail-safe release, allowing gate to be pushed open without mechanical devices, keys, cranks, or special knowledge.

I. Operating Features:

1. Digital Microprocessor Control: Electronic programmable means for setting, changing, and adjusting control features with capability for monitoring and auditing gate activity. Provide unit that is isolated from voltage spikes and surges.

2. System Integration: With controlling circuit board capable of accepting any type of input from external devices.

3. Automatic Closing Timer: With adjustable time delay before closing.

4. Open Override Circuit: Designed to override closing commands.

5. Reversal Time Delay: Designed to protect gate system from shock load on reversal in both directions.

6. Maximum Run Timer: Designed to prevent damage to gate system by shutting down system if normal time to open gate is exceeded.

J. Accessories:

1. Warning Module: Audio sounding three to five seconds in advance of gate operation and continuing until gate stops moving; compliant with the U.S. Architectural & Transportation Barriers Compliance Board's ADA-ABA Accessibility Guidelines.

2. Battery Backup System: Battery-powered drive and access-control system, independent of primary drive system.

   a. Fail Secure: Gate cycles on battery power, then fail safe when battery is discharged.

3. Postal box.

4. Instructional, Safety, and Warning Labels and Signs: Manufacturer's standard for components and features specified.

K. Equipment Bases/Pads: Cast-in-place or precast concrete, depth not less than sixty-inches (60”), dimensioned and reinforced according to gate-operator component manufacturer's written instructions.

L. Control Pedestal: Architectural, in-ground style pedestal with 4” X 4” post and large 11” X 13” faceplate to accommodate telephone systems. Black wrinkle powder coat finish. Insert the bottom 22” or more into the ground/cement to end up with a 42” or higher mount.

2.10 CAST-IN-PLACE CONCRETE

A. Class “B” concrete.

2.11 GROUT AND ANCHORING CEMENT

A. Nonshrink, Nonmetallic Grout: Premixed, factory-packaged, nonstaining, noncorrosive, nongaseous grout complying with ASTM C1107. Provide grout, recommended in writing by manufacturer, for exterior applications.

B. Erosion-Resistant Anchoring Cement: Factory-packaged, non-shrink, nonstaining, hydraulic-controlled expansion cement formulation for mixing with potable water at Project site to create pourable anchoring, patching, and grouting compound. Provide formulation that is resistant to erosion from water exposure without needing protection by a sealer or

waterproof coating and that is recommended in writing by manufacturer, for exterior applications.

2.12 FENCE GROUNDING

A. Conductors: Bare, solid wire for No. 6 AWG and smaller; stranded wire for No. 4 AWG and larger.

1. Material above Finished Grade: Aluminum.

2. Material on or below Finished Grade: Copper.

3. Bonding Jumpers: Braided copper tape, 1 inch wide, woven of No. 30 AWG bare copper wire, terminated with copper ferrules.

B. Connectors and Grounding Rods: Comply with UL 467.

1. Connectors for Below-Grade Use: Exothermic welded type.

2. Grounding Rods: Copper-clad steel.

a. Size: 5/8 by 96 inches.

2.13 PANEL SIGNS

A. Exterior Panel Signs: Provide smooth sign panel surfaces constructed to remain flat under installed conditions within a tolerance of plus or minus 1/16 inch (1.5 mm) measured diagonally from corner to corner, complying with the following requirements:

1. Material

a. Aluminum Sheet: 0.050 inch thick.
b. Acrylic Sheet: 0.060 inch thick.

2. Edge Condition: Square cut.

3. Corner Condition: Rounded.

4. Frames: Unframed.

5. Fence-fabric mounted.

6. Manufacturer's standard non-corroding, non-removable mechanical aluminum fasteners for fence fabric.

B. Panel Sign Schedule.

1. Fiberglass Hazard, Warning, and Notice Signs

a. Stop
   1) Size: 18" x 18" octagon
   2) Material: Aluminum.
   3) Color: Red with White Text and White Border

b. Warning - Authorized Personnel Only
   1) Size: 10" H x 14" W
   2) Material: Aluminum.
   3) Color: Orange with Black Text or combination of Red with White Text and White with Black Text

c. No Trespassing – Violators Will Be Prosecuted
   1) Size: 10" H x 14" W
   2) Material: Aluminum.
   3) Color: Red with White Text ("No Trespassing") and White with Black Text ("Violators Will Be Prosecuted")

PART 3 - EXECUTION

3.1 EXAMINATION

A. Examine areas and conditions, with Installer present, for compliance with requirements for site clearing, earthwork, pavement work, and other conditions affecting performance.

1. Do not begin installation before final grading is completed, unless otherwise permitted by Engineer.

2. Proceed with installation only after unsatisfactory conditions have been corrected.

3.2 PREPARATION

A. Stake locations of fence lines, gates, and terminal posts. Do not exceed intervals of 500 feet or line of sight between stakes. Indicate locations of utilities, lawn sprinkler system, underground structures, benchmarks, and property monuments.

3.3 INSTALLATION, GENERAL

A. Install chain-link fencing to comply with ASTM F567 and more stringent requirements specified.

1. Install fencing on established boundary lines inside property line.

2. Maintain temporary fence to secure site to Engineer's satisfaction during fence installation.

3.4 CHAIN-LINK FENCE INSTALLATION

A. Post Excavation: Drill or hand-excavate holes for posts to diameters and spacings indicated, in firm, undisturbed soil.

B. Post Setting: Set posts in concrete at indicated spacing into firm, undisturbed soil.

1. Verify that posts are set plumb, aligned, and at correct height and spacing, and hold in position during setting with concrete or mechanical devices.

2. Concrete Fill: Place concrete around posts to dimensions indicated and vibrate or tamp for consolidation. Protect aboveground portion of posts from concrete splatter.

a. Exposed Concrete: Extend 2 inches (50 mm) above grade; shape and smooth to shed water.

C. Terminal Posts: Locate terminal end, corner, and gate posts per ASTM F567 and terminal pull posts at changes in horizontal or vertical alignment.

D. Line Posts: Space line posts uniformly at 10 feet o.c. maximum.

E. Post Bracing and Intermediate Rails: Install according to ASTM F567, maintaining plumb position and alignment of fencing. Install braces at end posts, gate posts, and at both sides of corner and pull posts.

1. Locate horizontal braces at midheight of fabric 6 feet or higher, on fences with top rail and at 2/3 fabric height on fences without top rail. Install so posts are plumb when diagonal rod is under proper tension.

F. Tension Wire: Install according to ASTM F567, maintaining plumb position and alignment of fencing. Pull wire taut, without sags. Fasten fabric to tension wire with 0.120-inch-diameter hog rings of same material and finish as fabric wire, spaced a maximum of 24 inches o.c. Install tension wire in locations indicated before stretching fabric.

1. Bottom Tension Wire: Install tension wire within 6 inches of bottom of fabric and tie to each post with not less than same diameter and type of wire.

G. Top Rail: Install according to ASTM F567, maintaining plumb position and alignment of fencing. Run rail continuously through line post caps, bending to radius for curved runs and terminating into rail end attached to posts or post caps fabricated to receive rail at terminal posts. Provide expansion couplings as recommended in writing by fencing manufacturer.

H. Chain-Link Fabric: Apply fabric to outside of enclosing framework unless otherwise indicated. Leave 1 inch between finish grade or surface and bottom selvage, unless otherwise indicated. Pull fabric taut and tie to posts, rails, and tension wires. Anchor to framework so fabric remains under tension after pulling force is released.

I. Tension or Stretcher Bars: Thread through fabric and secure to end, corner, pull, and gate posts with tension bands spaced not more than 15 inches o.c.

J. Tie Wires: Use wire of proper length to firmly secure fabric to line posts and rails. Attach wire at 1 end to chain-link fabric, wrap wire around post a minimum of 180 degrees, and attach both ends to chain-link fabric per ASTM F626. Bend ends of wire to minimize hazard to individuals and clothing.

1. Maximum Spacing: Tie fabric to top rails and line posts at 12 inches o.c. and to braces at 24 inches o.c.

K. Fasteners: Install nuts for tension bands and carriage bolts on the side of the fence opposite the fabric side. Peen ends of bolts or score threads to prevent removal of nuts.

L. Barbed Wire: Install barbed wire uniformly spaced as indicated on Drawings. Pull wire taut and install securely to extension arms and secure to end post or terminal arms.

3.5 PANEL SIGN INSTALLATION

A. Mechanical fasteners shall be placed through predrilled holes.

B. Flush-mount signs. Generally, mount signs with top at 5’ above finished grade.

C. Panel Sign Location Schedule.

1. Stop
    a. Location: Mounted flush on fence fabric in the middle of horizontal sliding entrance gate, either side. Mount in manner to prevent binding as gate opens and closes.
2. Warning - Authorized Personnel Only
    a. Location: Mounted facing outward on fence fabric adjacent to all swing and sliding entrance gates.
3. No Trespassing – Violators Will Be Prosecuted
    a. Location: Mounted facing outward on fence fabric. Every 200’ on straight runs, minimum one each straight run. Space evenly.

3.6 GATE INSTALLATION

A. Install gates according to manufacturer's written instructions, level, plumb, and secure for full opening without interference. Attach fabric as for fencing. Attach hardware using tamper-resistant or concealed means. Install ground-set items in concrete for anchorage. Adjust hardware for smooth operation and lubricate where necessary.

3.7 GATE OPERATOR INSTALLATION

A. General: Install gate operators according to manufacturer's written instructions, aligned and true to fence line and grade.

B. Excavation for Support Posts, Pedestals, and Equipment Bases/Pads: Hand-excavate holes for bases/pads, in firm, undisturbed soil to dimensions and depths and at locations as required by gate-operator component manufacturer's written instructions and as indicated.

C. Vehicle Loop Detector System: Bury and seal wire loop according to manufacturer's written instructions. Connect to equipment operated by detector.

D. Comply with NFPA 70 and manufacturer's written instructions for grounding of electric-powered motors, controls, and other devices.

3.8 GROUNDING AND BONDING

A. Fence Grounding: Install at maximum intervals of 1500 feet except as follows:

1. Fences within 100 Feet of Buildings, Structures, Walkways, and Roadways: Ground at maximum intervals of 750 feet.

a. Gates and Other Fence Openings: Ground fence on each side of opening.

1) Bond metal gates to gate posts.

2) Bond across openings, with and without gates, except openings indicated as intentional fence discontinuities. Use No. 2 AWG wire and bury it at least 18 inches below finished grade.

B. Protection at Crossings of Overhead Electrical Power Lines: Ground fence at location of crossing and at a maximum distance of 150 feet on each side of crossing.

C. Fences Enclosing Electrical Power Distribution Equipment: Ground as required by IEEE C2, unless otherwise indicated.

D. Grounding Method: At each grounding location, drive a grounding rod vertically until the top is 6 inches below finished grade. Connect rod to fence with No. 6 AWG conductor. Connect conductor to each fence component at the grounding location, including the following:

1. Each Barbed Wire Strand. Make grounding connections to barbed wire with wire-to-wire connectors designed for this purpose.

E. Bonding Method for Gates: Connect bonding jumper between gate post and gate frame.

F. Connections: Make connections so possibility of galvanic action or electrolysis is minimized. Select connectors, connection hardware, conductors, and connection methods so metals in direct contact will be galvanically compatible.

1. Use electroplated or hot-tin-coated materials to ensure high conductivity and to make contact points closer in order of galvanic series.

2. Make connections with clean, bare metal at points of contact.

3. Make aluminum-to-steel connections with stainless-steel separators and mechanical clamps.

4. Make aluminum-to-galvanized-steel connections with tin-plated copper jumpers and mechanical clamps.

5. Coat and seal connections having dissimilar metals with inert material to prevent future penetration of moisture to contact surfaces.

G. Bonding to Lightning Protection System: If fence terminates at lightning-protected building or structure, ground the fence and bond the fence grounding conductor to lightning protection down conductor or lightning protection grounding conductor complying with NFPA 780.

3.9 FIELD QUALITY CONTROL

A. Grounding-Resistance Testing: Engage a qualified independent testing and inspecting agency to perform field quality-control testing.

1. Grounding-Resistance Tests: Subject completed grounding system to a megger test at each grounding location. Measure grounding resistance not less than two full days after last trace of precipitation, without soil having been moistened by any means other than natural drainage or seepage and without chemical treatment or other artificial means of reducing natural grounding resistance. Perform tests by two-point method according to IEEE 81.

2. Excessive Grounding Resistance: If resistance to grounding exceeds specified value, notify Engineer promptly. Include recommendations for reducing grounding resistance and a proposal to accomplish recommended work.

3.10 ADJUSTING

A. Gate: Adjust gate to operate smoothly, easily, and quietly, free of binding, warp, excessive deflection, distortion, nonalignment, misplacement, disruption, or malfunction, throughout entire operational range. Confirm that latches and locks engage accurately and securely without forcing or binding.

B. Automatic Gate Operator: Energize circuits to electrical equipment and devices. Adjust operators, controls, safety devices, alarms, and limit switches.

1. Operational Test: After electrical circuitry has been energized, start units to confirm proper motor rotation and unit operation.

2. Test and adjust controls, alarms, and safeties. Replace damaged and malfunctioning controls and equipment.

C. Lubricate hardware, gate, and other moving parts.

END OF SECTION 02821

02920

Lawns and Grasses

SECTION 02920
LAWNS AND GRASSES

PART 1 - GENERAL

1.1 SUMMARY

A. This Section includes the following:

1. Seeding.
2. Hydroseeding.
3. Sodding.
4. Plugging.

B. Related sections include the following:

1. Section 02230 – Site Clearing for topsoil stripping and stockpiling.
2. Section 02300 – Earthwork for excavation, filling and backfilling, and rough grading.

1.2 DEFINITIONS

A. Finish Grade: Elevation of finished surface of planting soil.

B. Manufactured Topsoil: Soil produced off-site by homogeneously blending mineral soils or sand with stabilized organic soil amendments to produce topsoil or planting soil.

C. Pesticide: A substance or mixture intended for preventing, destroying, repelling, or mitigating a pest. This includes insecticides, miticides, herbicides, fungicides, rodenticides, and molluscicides. It also includes substances or mixtures intended for use as a plant regulator, defoliant, or desiccant.

D. Pests: Living organisms that occur where they are not desired or that cause damage to plants, animals, or people. These include insects, mites, grubs, mollusks (snails and slugs), rodents (gophers, moles, and mice), unwanted plants (weeds), fungi, bacteria, and viruses.

E. Planting Soil: Standardized topsoil; existing, native surface topsoil; existing, in-place surface soil; imported topsoil; or manufactured topsoil that is modified with soil amendments and perhaps fertilizers to produce a soil mixture best for plant growth.

F. Subgrade: Surface or elevation of subsoil remaining after excavation is complete, or top surface of a fill or backfill before planting soil is placed.

G. Subsoil: All soil beneath the top soil layer of the soil profile, and typified by the lack of organic matter and soil organisms.

H. Surface Soil: Soil that is present at the top layer of the existing soil profile at the Project site. In undisturbed areas, the surface soil is typically top soil, but in disturbed areas such as urban environments, the surface soil can be subsoil.

1.3 SUBMITTALS

A. Action Submittals

1. Product Data

a. Pesticides and Herbicides: Include product label and manufacturer's application instructions specific to this Project.

B. Informational Submittals

1. Product and Material Certificates

a. Certification of Grass Seed: From seed vendor for each grass-seed monostand or mixture stating the botanical and common name, percentage by weight of each species and variety, and percentage of purity, germination, and weed seed. Include the year of production and date of packaging.

1) Certification of each seed mixture for turfgrass sod and plugs. Include identification of source and name and telephone number of supplier.

b. For soil amendments and fertilizers, from manufacturer.

1.4 DELIVERY, STORAGE, AND HANDLING

A. Seed and Other Packaged Materials: Deliver packaged materials in original, unopened containers showing weight, certified analysis, name and address of manufacturer, and indication of conformance with state and federal laws, as applicable.

B. Sod: Harvest, deliver, store, and handle sod according to requirements in "Specifications for Turfgrass Sod Materials" and "Specifications for Turfgrass Sod Transplanting and Installation" in TPI's "Guideline Specifications to Turfgrass Sodding." Deliver sod in time for planting within 24 hours of harvesting. Protect sod from breakage and drying.

C. Bulk Materials:

1. Do not dump or store bulk materials near structures, utilities, walkways and pavements, or on existing turf areas or plants.

2. Accompany each delivery of bulk fertilizers, lime, and soil amendments with appropriate certificates.

1.5 PROJECT CONDITIONS

A. Planting Restrictions: Plant during one of the following periods. Coordinate planting periods with initial maintenance periods to provide required maintenance from date of planting completion.

1. Spring Planting: March 1 through May 15.

2. Fall Planting: August 15 through October 15.

B. Weather Limitations: Proceed with planting only when existing and forecasted weather conditions permit planting to be performed when beneficial and optimum results may be obtained. Apply products during favorable weather conditions according to manufacturer's written instructions.

1.6 WARRANTIES

A. Special Warranties

1. Provide maintenance bond, in form acceptable to Owner, or fund escrow, acceptable to Owner, for maintenance of temporary surface and installation of pavements not complete due to seasonal limitations at the time of Final Completion.

PART 2 - PRODUCTS

2.1 SEED

A. Grass Seed: Fresh, clean, dry, new-crop seed complying with AOSA's "Journal of Seed Technology; Rules for Testing Seeds" for purity and germination tolerances.

B. Seed Species: Seed species shall comply with Section 621.06 of the INDOT SS.

1. Sun: Type R seed mixture, applied at a rate of 170 lb/acre.

2. Shade: Type U seed mixture, applied at a rate of 150 lb/acre.

2.2 TURFGRASS SOD

A. Turfgrass Sod: Number 1 Quality/Premium, including limitations on thatch, weeds, diseases, nematodes, and insects, complying with "Specifications for Turfgrass Sod Materials" in TPI's "Guideline Specifications to Turfgrass Sodding." Furnish viable sod of uniform density, color, and texture, strongly rooted, and capable of vigorous growth and development when planted.

B. Turfgrass Species: Kentucky Bluegrass.

2.3 PLUGS

A. Plugs: Turfgrass sod, Number 1 Quality/Premium, including limitations on thatch, weeds, diseases, nematodes, and insects, complying with

"Specifications for Turfgrass Sod Materials" in TPI's "Guideline Specifications to Turfgrass Sodding." Furnish viable sod of uniform density, color, and texture, cut into square or round plugs, strongly rooted, and capable of vigorous growth and development when planted; of the following turfgrass species and plug size:

B. Turfgrass Species: Kentucky Bluegrass.

C. Plug Size: 2 inches.

2.4 LIME

A. ASTM C602, agricultural liming material containing a minimum of 80 percent calcium carbonate equivalent and as follows:

1. Class: T, with a minimum of 99 percent passing through No. 8 sieve and a minimum of 75 percent passing through No. 60 sieve.

2. Class: O, with a minimum of 95 percent passing through No. 8 sieve and a minimum of 55 percent passing through No. 60 sieve.

3. Provide lime in form of ground dolomitic limestone, calcitic limestone, or mollusk shells.

2.5 FERTILIZERS

A. Superphosphate: Commercial, phosphate mixture, soluble; a minimum of 20 percent available phosphoric acid.

B. Commercial Fertilizer: Commercial-grade complete fertilizer of neutral character, consisting of fast- and slow-release nitrogen, 50 percent derived from natural organic sources of urea formaldehyde, phosphorous, and potassium in the following composition:

1. Composition: 1 lb/1000 sq. ft. of actual nitrogen, 4 percent phosphorous, and 2 percent potassium, by weight.

2.6 MULCHES

A. Straw Mulch: Provide air-dry, clean, mildew- and seed-free, salt hay or threshed straw of agricultural crops.

B. Sphagnum Peat Mulch: Partially decomposed sphagnum peat moss finely divided or of granular texture, and with a pH range of 3.4 to 4.8.

C. Compost Mulch: Well-composted, stable, and weed-free organic matter, pH range of 5.5 to 8; moisture content 35 to 55 percent by weight; 100 percent passing through 1-inch sieve; soluble salt content of 2 to 5 decisiemens/m; not exceeding 0.5 percent inert contaminants and free of substances toxic to plantings; and as follows:

1. Organic Matter Content: 50 to 60 percent of dry weight.

2. Feedstock: Agricultural, food, or industrial residuals; biosolids; yard trimmings; or source-separated or compostable mixed solid waste.

D. Fiber Mulch: Biodegradable, dyed-wood, cellulose-fiber mulch; nontoxic and free of plant-growth or germination inhibitors; with a maximum moisture content of 15 percent and a pH range of 4.5 to 6.5.

E. Non-asphaltic Tackifier: Colloidal tackifier recommended by fiber-mulch manufacturer for slurry application; nontoxic and free of plant-growth or germination inhibitors.

F. Asphalt Emulsion: ASTM D977, Grade SS-1; nontoxic and free of plant-growth or germination inhibitors.

2.7 EROSION CONTROL MATERIALS

A. Erosion-Control Blankets: Biodegradable wood excelsior, straw, or coconut-fiber mat enclosed in a photodegradable plastic mesh. Include manufacturer's recommended steel wire staples, 6 inches long.

B. Erosion-Control Fiber Mesh: Biodegradable burlap or spun-coir mesh, a minimum of 0.92 lb/sq. yd. with 50 to 65 percent open area. Include manufacturer's recommended steel wire staples, 6 inches long.

C. Erosion-Control Mats: Cellular, non-biodegradable slope-stabilization mats designed to isolate and contain small areas of soil over steeply sloped surface, of 3-inch minimum nominal mat thickness. Include manufacturer's recommended anchorage system for slope conditions.

2.8 HERBICIDES AND PESTICIDES

A. Herbicides and pesticides, registered and approved by EPA, acceptable to authorities having jurisdiction, and of type recommended by manufacturer for each specific problem and as required for Project conditions and application. Do not use restricted herbicides or pesticides unless authorized in writing by authorities having jurisdiction.

PART 3 - EXECUTION

3.1 EXAMINATION

A. Examine areas to be planted for compliance with requirements and other conditions affecting performance.

1. Verify that no foreign or deleterious material or liquid such as paint, paint washout, concrete slurry, concrete layers or chunks, cement, plaster, oils, gasoline, diesel fuel, paint thinner, turpentine, tar, roofing compound, or acid has been deposited in soil within a planting area.

2. Do not mix or place soils and soil amendments in frozen, wet, or muddy conditions.

3. Suspend soil spreading, grading, and tilling operations during periods of excessive soil moisture until the moisture content reaches acceptable levels to attain the required results.

4. Uniformly moisten excessively dry soil that is not workable and which is too dusty.

B. Proceed with installation only after unsatisfactory conditions have been corrected.

C. If contamination by foreign or deleterious material or liquid is present in soil within a planting area, remove the soil and contamination as directed by Engineer and replace with new planting soil.

3.2 PREPARATION, GENERAL

A. Protect structures, utilities, sidewalks, pavements, and other facilities, trees, shrubs, and plantings from damage caused by planting operations.

1. Where hydroseeding or hydro mulching, protect adjacent and adjoining areas from overspray.

2. Protect grade stakes set by others until directed to remove them.

3.3 TURF AREA PREPARATION

A. Limit turf subgrade preparation to areas to be planted.

B. Newly Graded Subgrades: Loosen subgrade to a minimum depth of 4 inches. Remove stones larger than two inches (2") in any dimension and sticks, roots, rubbish, and other extraneous matter and legally dispose of them off Owner's property.

1. Apply superphosphate fertilizer directly to subgrade before loosening.

2. Apply soil amendments and fertilizer on surface, and thoroughly blend planting soil.

a. Delay mixing fertilizer with planting soil if planting will not proceed within a few days.
b. Mix lime with dry soil before mixing fertilizer.
c. Reduce elevation of planting soil to allow for soil thickness of sod.

C. Unchanged Subgrades: If turf is to be planted in areas unaltered or undisturbed by excavating, grading, or surface-soil stripping operations, prepare surface soil as follows:

1. Remove existing grass, vegetation, and turf. Do not mix into surface soil.

2. Loosen surface soil to a depth of at least four inches (4”). Apply soil amendments and fertilizers according to planting soil mix proportions and mix thoroughly into top 4 inches of soil. Till soil to a homogeneous mixture of fine texture.

3. Remove stones larger than 2 inches (2”) in any dimension and sticks, roots, trash, and other extraneous matter.

4. Legally dispose of waste material, including grass, vegetation, and turf, off Owner's property.

D. Finish Grading: Grade planting areas to a smooth, uniform surface plane with loose, uniformly fine texture. Grade to within plus or minus 1/2 inch of finish elevation. Roll and rake, remove ridges, and fill depressions to meet finish grades. Limit finish grading to areas that can be planted in the immediate future.

E. Moisten prepared area before planting if soil is dry. Water thoroughly and allow surface to dry before planting. Do not create muddy soil.

F. Before planting, restore planting areas if eroded or otherwise disturbed after finish grading.

3.4 SEEDING

A. Sow seed with spreader or seeding machine. Do not broadcast or drop seed when wind velocity exceeds 5 mph. Evenly distribute seed by sowing equal quantities in two directions at right angles to each other.

1. Do not use wet seed or seed that is moldy or otherwise damaged.

2. Do not seed against existing trees.

B. Sow seed at rate indicated.

C. Rake or mechanically mix seed lightly into top 1/8 inch of soil, roll lightly, and water with fine spray.

D. Protect seeded areas in ditch flowlines and with slopes exceeding 1:4 with erosion-control blankets and 1:6 with erosion-control fiber mesh installed and stapled according to manufacturer's written instructions.

E. Protect seeded areas with slopes not exceeding 1:6 by spreading straw mulch. Spread uniformly at a minimum rate of 2 tons/acre to form a continuous blanket over seeded areas. Spread by hand, blower, or other suitable equipment. Anchor straw in one of the following methods:

1. Anchor straw mulch by crimping into soil with suitable mechanical equipment.

2. Bond straw mulch by spraying with asphalt emulsion at a rate of 10 to 13 gal./1000 sq. ft. Take precautions to prevent damage or staining of structures or other plantings adjacent to mulched areas. Immediately clean damaged or stained areas.

F. Protect seeded areas from hot, dry weather or drying winds by applying compost mulch within 24 hours after completing seeding operations. Soak areas, scatter mulch uniformly to a thickness of 3/16 inch, and roll surface smooth.

3.5 HYDROSEEDING

A. Hydroseeding: Mix specified seed, fertilizer, and fiber mulch in water, using equipment specifically designed for hydroseed application. Continue mixing until uniformly blended into homogeneous slurry suitable for hydraulic application.

1. Mix slurry with non-asphaltic tackifier, asphalt-emulsion, or iber-mulch manufacturer's recommended tackifier where hydro mulching slopes greater than 1:4.

2. Apply slurry uniformly to all areas to be seeded in a one-step process. Apply slurry at a rate so that mulch component is deposited at not less than 1500-lb/acre dry weight, and seed component is deposited at not less than the specified seed-sowing rate.

3.6 SODDING

A. Lay sod within 24 hours of harvesting. Do not lay sod if dormant or if ground is frozen or muddy.

B. Lay sod to form a solid mass with tightly fitted joints. Butt ends and sides of sod; do not stretch or overlap. Stagger sod strips or pads to offset joints in adjacent courses. Avoid damage to subgrade or sod during installation. Tamp and roll lightly to ensure contact with subgrade, eliminate air pockets, and form a smooth surface. Work sifted soil or fine sand into minor cracks between pieces of sod; remove excess to avoid smothering sod and adjacent grass.

1. Lay sod across angle of slopes exceeding 1:3.

2. Anchor sod on slopes exceeding 1:6 with wood pegs spaced as recommended by sod manufacturer but not less than 2 anchors per sod strip to prevent slippage.

C. Saturate sod with fine water spray within two hours of planting. During first week after planting, water daily or more frequently as necessary to maintain moist soil to a minimum depth of 1-1/2 inches below sod.

3.7 PLUGGING

A. Plant plugs in holes or furrows, spaced 12 inches apart in both directions. On slopes, contour furrows to near level.

3.8 TURF MAINTENANCE

A. Maintain and establish turf by watering, fertilizing, weeding, mowing, trimming, replanting, and performing other operations as required to establish healthy, viable turf. Roll, regrade, and replant bare or eroded areas and remulch to produce a uniformly smooth turf. Provide materials and installation the same as those used in the original installation.

1. Fill in as necessary soil subsidence that may occur because of settling or other processes. Replace materials and turf damaged or lost in areas of subsidence.

2. In areas where mulch has been disturbed by wind or maintenance operations, add new mulch and anchor as required to prevent displacement.

3. Apply treatments as required to keep turf and soil free of pests and pathogens or disease. Use integrated pest management practices

whenever possible to minimize the use of pesticides and reduce hazards.

B. Watering: Install and maintain temporary piping, hoses, and turf-watering equipment to convey water from sources and to keep turf uniformly moist.

1. Schedule watering to prevent wilting, puddling, erosion, and displacement of seed or mulch. Lay out temporary watering system to avoid walking over muddy or newly planted areas.

C. Mow turf as soon as top growth is tall enough to cut. Repeat mowing to maintain specified height without cutting more than 1/3 of grass height. Remove no more than 1/3 of grass-leaf growth in initial or subsequent mowings. Do not delay mowing until grass blades bend over and become matted. Do not mow when grass is wet. Schedule initial and subsequent mowings to maintain the following grass height:

1. Mow to a height of 1-1/2 to 2 inches.

3.9 HERBICIDE AND PESTICIDE APPLICATION

A. Apply herbicides, pesticides and other chemical products and biological control agents in accordance with requirements of authorities having jurisdiction and manufacturer's written recommendations as needed to establish satisfactory turf. Coordinate applications with Owner's operations and others in proximity to the Work. Notify Owner before each application is performed.

3.10 SATISFACTORY TURF

A. Turf installations shall meet the following criteria as determined by Engineer:

1. Satisfactory Seeded Turf: At end of maintenance period, a healthy, uniform, close stand of grass has been established, free of weeds and surface irregularities, with coverage exceeding 90 percent over any 10 sq. ft. and bare spots not exceeding 12 inches by 12 inches.

2. Satisfactory Sodded Turf: At end of maintenance period, a healthy, well-rooted, even-colored, viable turf has been established, free of weeds, open joints, bare areas, and surface irregularities.

3. Satisfactory Plugged Turf: At end of maintenance period, the required number of plugs has been established as well-rooted, viable patches of grass, and areas between plugs are free of weeds and other undesirable vegetation.

B. Use specified materials to reestablish turf that does not comply with requirements and continue maintenance until turf is satisfactory.

3.11 CLEANUP AND PROTECTION

A. Promptly remove soil and debris created by turf work from paved areas. Clean wheels of vehicles before leaving site to avoid tracking soil onto roads, walks, or other paved areas.

B. Erect temporary fencing or barricades and warning signs as required to protect newly planted areas from traffic. Maintain fencing and barricades throughout initial maintenance period and remove after plantings are established.

C. Remove nondegradable erosion-control measures after grass establishment period.

END OF SECTION 02920

DIVISION 3

CONCRETE

03300

Cast-in-Place Concrete

SECTION 03300
CAST-IN-PLACE CONCRETE

PART 1 - GENERAL

1.1 SUMMARY

A. This Section specifies cast-in place concrete, including formwork, reinforcement, concrete materials, mixture design, placement procedures, and finishes, for the following:

1. Footings

2. Slabs-on-grade.

1.2 ACRONYMS

A. ACI: American Concrete Institute.

B. AISC: American Institute of Steel Construction, Inc.

C. CRSI: Concrete Reinforcing Steel Institute.

D. INDOT SS: Indiana Department of Transportation (INDOT) Standard Specifications, and applicable supplements, current at the time of the bid.

E. NRMCA: National Ready Mix Concrete Association.

1.3 SUBMITTALS

A. Action Submittals

1. Product Data

2. Mix Design: for each concrete mixture. Submit alternate design mixtures when characteristics of materials, Project conditions, weather, test results, or other circumstances warrant adjustments. The mix design shall be

submitted a minimum of 7 days prior to the trial batch and shall include the following:

a. A list of all ingredients.
b. The source of all materials.
c. The fine to total aggregate ratio.
d. The aggregate gradation.
e. The absorption of the aggregates.
f. The SSD bulk specific gravity of the aggregates.
g. The specific gravity of Pozzolan.
h. Batch weights.
i. Names of all admixtures.
j. Admixture dosage rates and manufacturer's recommended range.
k. Amounts of mixing water to be withheld for later addition at Project site.

3. Shop Drawings

a. Steel Reinforcement Shop Drawings: Placing drawings that detail fabrication, bending, and placement. Include bar sizes, lengths, material, grade, bar schedules, stirrup spacing, bent bar diagrams, bar arrangement, splices and laps, mechanical connections, tie spacing, hoop spacing, and supports for concrete reinforcement.
b. Field-Required Construction Joints: Details of reinforcing steel, adhesive requirements, and other details at construction joints required due to the planned daily progression of the concrete placement.
c. Formwork Shop Drawings: Prepared by or under the supervision of a qualified professional engineer detailing fabrication, assembly, and support of formwork.
d. Shoring and Reshoring: Indicate proposed schedule and sequence of stripping formwork, shoring removal, and installing and removing reshoring.

B. Informational Submittals

1. Material Test Reports: For the following, from a qualified testing agency, indicating compliance with requirements:

a. Aggregates.

2. Material Certificates: For each of the following, signed by manufacturers:

a. Cementitious materials.
b. Admixtures.
c. Form materials and form-release agents.
d. Steel reinforcement and accessories.
e. Fiber reinforcement.
f. Water stops.
g. Curing compounds.
h. Floor and slab treatments.
i. Bonding agents.
j. Adhesives.
k. Vapor retarders.
l. Semirigid joint filler.
m. Joint-filler strips.
n. Repair materials.

3. Manufacturers' Instructions

a. Admixtures.
b. Form-releasing agents.
c. Water stop installation and splicing.
d. Curing compounds.
e. Floor and slab treatments.
f. Bonding agents
g. Adhesives
h. Repair materials.

4. Field quality-control test reports.

5. Batch Tickets, including:

a. Name of concrete supplier.
b. Name of purchase and job location.
c. Date of delivery.
d. Amount of concrete delivered.
e. Time loaded.
f. Design mix designation.
g. Admixture – type and quantity.
h. Quantity of cement on truck.
i. Quantity of water added at plant.
j. For a design mix change, also include:
k. Time concrete arrived at the site.

l. Water added by driver and/or receiver of concrete.
m. Admixtures added on site, including type, quantity, and time.
n. Time concrete was unloaded.

1.4 QUALITY ASSURANCE

A. Flatwork Installer Qualifications: A qualified installer who employs on-Project personnel qualified as ACI-certified Flatwork Technician and Finisher and a supervisor who is an ACI-certified Concrete Flatwork Technician.

B. Manufacturer Qualifications: A firm experienced in manufacturing ready-mixed concrete products and that complies with ASTM C94 requirements for production facilities and equipment.

1. Manufacturer certified according to NRMCA's "Certification of Ready Mixed Concrete Production Facilities."

C. Testing Agency Qualifications: An INDOT-approved testing laboratory or an independent agency qualified according to ASTM C1077 and ASTM E329 for testing indicated, as documented according to ASTM E548.

1. Personnel conducting field tests shall be qualified as ACI Concrete Field Testing Technician, Grade 1, according to ACI CP-01 or an equivalent certification program.

2. Personnel performing laboratory tests shall be ACI-certified Concrete Strength Testing Technician and Concrete Laboratory Testing Technician - Grade I. Testing Agency laboratory supervisor shall be an ACI-certified Concrete Laboratory Testing Technician - Grade II.

D. Source Limitations: Obtain each type or class of cementitious material of the same brand from the same manufacturer's plant, obtain aggregate from one source, and obtain admixtures through one source from a single manufacturer.

E. ACI Publications: Comply with the following unless modified by requirements in the Contract Documents:

1. ACI 301, "Specification for Structural Concrete,"

2. ACI 117, "Specifications for Tolerances for Concrete Construction and Materials."

F. Regulatory Requirements: Use only products meeting all regulatory requirements for water, sewer, or storm sewer structures.

1.5 DELIVERY, STORAGE, AND HANDLING

A. Steel Reinforcement: Deliver, store, and handle steel reinforcement to prevent bending and damage. Avoid damaging coatings on steel reinforcement.

B. Water stops: Store water stops under cover to protect from moisture, sunlight, dirt, oil, and other contaminants.

C. Cement: Stored in weathertight buildings, bins, or silos which exclude moisture, contaminants, and minimize warehouse set.

D. Aggregates

1. Arrange and use to avoid excessive segregation and prevent contamination with other materials or other sizes of like aggregate.

E. Admixtures: Store in manner to avoid contamination, evaporation, or damage. Protect liquid admixtures from freezing and from temperature changes which would adversely affect their characteristics.

PART 2 - PRODUCTS

2.1 FORM-FACING MATERIALS

A. Smooth-Formed Finished Concrete: Form-facing panels that will provide continuous, true, and smooth concrete surfaces. Furnish in largest practicable sizes to minimize number of joints.

1. Plywood, metal, or other approved panel materials.

2. Exterior-grade plywood panels, suitable for concrete forms, complying with DOC PS 1, and as follows:

a. High-density overlay, Class 1 or better.
b. Medium-density overlay, Class 1 or better; mill-release agent treated, and edge sealed.
c. Structural 1, B-B or better; mill oiled, and edge sealed.
d. B-B (Concrete Form), Class 1 or better; mill oiled, and edge sealed.

B. Rough-Formed Finished Concrete: Plywood, lumber, metal, or another approved material. Provide lumber dressed on at least two edges and one side for tight fit.

C. Forms for Cylindrical Columns, Pedestals, and Supports: Metal, glass-fiber-reinforced plastic, paper, or fiber tubes that will produce surfaces with gradual or abrupt irregularities not exceeding specified formwork surface class. Provide units with sufficient wall thickness to resist plastic concrete loads without detrimental deformation.

D. Pan-Type Forms: Glass-fiber-reinforced plastic or formed steel, stiffened to resist plastic concrete loads without detrimental deformation.

E. Void Forms: Biodegradable paper surface, treated for moisture resistance, structurally sufficient to support weight of plastic concrete and other superimposed loads.

F. Chamfer Strips: Wood, metal, PVC, or rubber strips, 3/4 by 3/4 inch, minimum.

G. Rustication Strips: Wood, metal, PVC, or rubber strips, kerfed for ease of form removal.

H. Form-Release Agent: Commercially formulated form-release agent that will not bond with, stain, or adversely affect concrete surfaces and will not impair subsequent treatments of concrete surfaces.

1. Formulate form-release agent with rust inhibitor for steel form-facing materials.

I. Form Ties: Factory-fabricated, removable or snap-off metal or glass-fiber-reinforced plastic form ties designed to resist lateral pressure of fresh concrete on forms and to prevent spalling of concrete on removal.

1. Furnish units that will leave no corrodible metal closer than 1 inch to the plane of exposed concrete surface.

2. Furnish ties that, when removed, will leave holes no larger than 1 inch in diameter in concrete surface.

3. Furnish ties with integral water-barrier plates to walls indicated to receive damp proofing or waterproofing.

2.2 STEEL REINFORCEMENT

A. Recycled Content of Steel Products: Provide products with an average recycled content of steel products that complies with standards applicable to Owner and required by Project funding agencies.

B. Reinforcing Bars: ASTM A615, Grade 60, deformed.

C. Low-Alloy-Steel Reinforcing Bars: ASTM A706, deformed.

D. Steel Bar Mats: ASTM A184, fabricated from ASTM A615, Grade 60, deformed bars, assembled with clips.

E. Plain-Steel Wire: ASTM A82, as drawn.

F. Deformed-Steel Wire: ASTM A496.

G. Epoxy-Coated Wire: ASTM A884, Class A, Type 1 coated, as-drawn, with less than 2 percent damaged coating in each 12-inch wire length.

H. Plain-Steel Welded Wire Reinforcement: ASTM A185, plain, fabricated from as-drawn steel wire into flat sheets.

I. Deformed-Steel Welded Wire Reinforcement: ASTM A497, flat sheet.

J. Galvanized-Steel Welded Wire Reinforcement: ASTM A185, plain, fabricated from galvanized steel wire into flat sheets.

K. Epoxy-Coated Welded Wire Reinforcement: ASTM A884, Class A coated, Type 1, plain steel.

2.3 REINFORCEMENT ACCESSORIES

A. Joint Dowel Bars: ASTM A615, Grade 60, plain-steel bars, cut bars true to length with ends square and free of burrs.

B. Epoxy-Coated Joint Dowel Bars: ASTM A615, Grade 60, plain-steel bars, ASTM A775 epoxy coated.

C. Epoxy Repair Coating: Liquid, two-part, epoxy repair coating; compatible with epoxy coating on reinforcement and complying with ASTM A775.

D. Zinc Repair Material: ASTM A780, zinc-based solder, paint containing zinc dust, or sprayed zinc.

E. Bar Supports: Bolsters, chairs, spacers, and other devices for spacing, supporting, and fastening reinforcing bars and welded wire reinforcement in place. Manufacture bar supports from steel wire, plastic, or precast concrete according to CRSI's "Manual of Standard Practice," of greater compressive strength than concrete and as follows:

1. For concrete surfaces exposed to view where legs of wire bar supports contact forms, use CRSI Class 1 plastic-protected steel wire or CRSI Class 2 stainless-steel bar supports.

2. For epoxy-coated reinforcement, use epoxy-coated or other dielectric-polymer-coated wire bar supports.

3. For zinc-coated reinforcement, use galvanized wire or dielectric-polymer-coated wire bar supports.

2.4 AGGREGATES AND POZZOLAN

A. Coarse Aggregate

1. 100 percent of all aggregates shall pass the 1-inch sieve.

2. 20 percent of coarse aggregates shall be retained on the No. 4 sieve.

3. Aggregates shall be free from lumps or crusts of hardened or frozen materials.

B. Fine Aggregate

1. 100 percent of fine aggregates shall pass the 3/8-inch sieve, and a minimum of 80 percent shall pass the No. 4 sieve.

2. Fine aggregates shall comprise at least 35 percent and not more than 50 percent of the total weight of aggregate in each cubic yard. Proportions will be based on saturated surface dry aggregates.

C. Fly Ash

1. Fly ash is the finely divided residue from the combustion of ground or powered coal. Class F fly ash is produced from anthracite or bituminous coal and class C ash is produced from lignite or subbituminous coal.

2. Fly ash or Ground Blast Furnace Slag may only be incorporated in the concrete mix between April 1 and October 15 of the same calendar year.

3. Fly ash will only be accepted from one of the approved sources on the Indiana Department of Transportation supplier sources.

4. Fly ash shall be in accordance with AASHTO M-295 for class C or class F excepting conditions as referenced in INDOT specification 901.02(b)1.

D. Ground Blast Furnace Slag

1. Blast furnace slag shall consist of the non-metallic product, consisting essentially of silicates and aluminosilicates of calcium and other bases, that is developed in a molten condition simultaneously with iron in a blast furnace.

2. Ground granulated blast furnace slag will be accepted based on manufacturer's or distributor's documented ability to consistently furnish these materials in accordance with applicable ASTM and AASHTO requirements.

2.5 PORTLAND CEMENT

A. Portland cement shall conform to the following cited specifications except as noted.

1. Air-entraining Portland blast-furnace slag cement: AASHTO M-240, Type ISA
2. Air-entraining Portland cement: AASHTO M-85, Type IA or IIIA
3. Air-entraining Portland Pozzolan cement: AASHTO M-240, Type IP-A
4. Portland blast-furnace slag cement: AASHTO M-240, Type IS
5. Portland cement: AASHTO M-85, Type I, II, or III
6. Portland Pozzolan cement: AASHTO M-240, Type IP
7. Slag modified Portland cement, Type ISM: AASHTO M-240

B. Exceptions to AASHTO M-240 are as follows:
1. The amount of Pozzolan shall be limited to 20% +/- 5% by weight of Portland-Pozzolan cement for the types IP and IP-A
2. The Pozzolan in the Portland-Pozzolan cements, types IP and IP-A, shall be in accordance with ASTM C-618, class C or class F, with the loss on ignition of the Pozzolan limited to a maximum of 3 percent.
3. The Pozzolan in the Portland-Pozzolan cements, types IP and IP-A, shall be inter-ground with the Portland cement clinker.

2.6 ADMIXTURES

A. Admixtures shall be selected from the INDOT list of approved admixtures. Admixtures containing chloride added as an ingredient of manufacture are unacceptable.

B. Air entraining admixtures are materials added to mixtures at the mixer for the purpose of entraining air.
1. Air-entraining admixtures shall conform to AASHTO M-154.

C. Chemical admixtures are added to the mixture at the mixer for the purpose or purposes indicated below:

1. Type A: admixture that reduces the quantity of mixing water required to produce concrete of a given consistency.

2. Type B: admixture that retards the setting of concrete.

3. Type C: admixture that accelerates the setting and early strength development of the concrete.

4. Type D: admixture that reduces the quantity of mixing water required to produce concrete of a given quantity and retards the setting of concrete.

5. Type E: admixture that reduces the quantity of mixing water required to produce concrete of a given consistency and accelerates the setting and early strength development of the concrete.

6. Type F: admixture that reduces the quantity of mixing water required to produce concrete of a given consistency by 12% or more.

7. Type G: high range water reducing and retarding admixture that reduces the quantity of mixing water required to produce concrete of a given consistency by 12% or greater.

2.7 GROUTS AND REPAIR MATERIALS

A. Grout: Grout shall be a mixture of Portland cement and sand with a normal proportioning of 2:1 sand-cement.

   1. Grout shall be a mixture of Portland cement and sand with a normal proportioning of 2:1 sand-cement. Grout shall be used to form floor slopes in manholes, valve structures, channel bottoms, clarifier floors and like work where a fine grade of concrete mix is necessary for thin grading with a smooth finished surface.

B. Non-Shrink Grout: Non-shrink, non-metallic grout conforming to ASTM C1107. Non-shrink grout shall:

   1. Be sulfate resistant and consist of pre measured, prepackaged materials requiring only the addition of water.

   2. Not contain metallic particles such as aluminum powders or iron filings.

3. Have a minimum setting time of 60 minutes when tested in accordance with ASTM C191.

4. When tested at maximum allowable water content, exhibits no shrinkage (0.0%) and a maximum of 4.0% expansion when tested in accordance with ASTM C827 and no shrinkage (0.0%) and a minimum of 0.2% expansion with the hardened state when tested in accordance with CRD C621.

5. Have a minimum compressive strength of 5,000 psi at 28 days.

C. Slab Repair Underlayment: Cement-based, polymer-modified, self-leveling product that can be applied in thicknesses from 1/8 inch and that can be feathered at edges to match adjacent floor elevations.

1. Cement Binder: ASTM C150, portland cement or hydraulic or blended hydraulic cement as defined in ASTM C219.

2. Primer: Product of underlayment manufacturer recommended for substrate, conditions, and application.

3. Aggregate: Well-graded, washed gravel, 1/8 to 1/4 inch or coarse sand as recommended by underlayment manufacturer.

4. Compressive Strength: Not less than 4100 psi at 28 days when tested according to ASTM C109.

D. Slab Repair Overlayment: Cement-based, polymer-modified, self-leveling product that can be applied in thicknesses from 1/8 inch and that can be feathered at edges to match adjacent floor elevations.

1. Cement Binder: ASTM C150, portland cement or hydraulic or blended hydraulic cement as defined in ASTM C219.

2. Primer: Product of topping manufacturer recommended for substrate, conditions, and application.

3. Aggregate: Well-graded, washed gravel, 1/8 to 1/4 inch or coarse sand as recommended by topping manufacturer.

4. Compressive Strength: Not less than 5000 psi at 28 days when tested according to ASTM C109.

E. Rapid Setting Patching Materials

1. Rapid setting patch materials shall be selected from the INDOT-approved products list.

2. Material shall be capable of being utilized in patches ranging from 1-inch to full depth without bonding agents. No curing material shall be required. Patching material shall be capable of being surface sealed with an epoxy sealer.

3. The product shall be single packaged dry mix requiring only water just prior to mixing. The minimum shelf life shall be 12 months.

F. Patching Mortar: Mix dry-pack patching mortar, consisting of one part portland cement to two and one-half parts fine aggregate passing a No. 16 sieve, using only enough water for handling and placing.

2.8 WATER

A. Potable Water: Potable quality water may be used without testing.

B. Non-potable Water: Water used in mixing or curing shall be reasonably clean and free of oil, salt, acid, alkali, sugar, vegetable, or other substance injurious to the finished product.

1. Water will be tested in accordance with AASHTO T-26 and shall be in accordance with the following:

a. pH: 6 to 8
b. Chloride Ions: less than 300 ppm
c. Sulphate (SO_4) : less than 500 ppm
d. Total Solids: less than 1500 ppm

C. Water containing algae will be unacceptable for use in concrete.

2.9 PREFORMED FILLERS

A. Expansion- and Isolation-Joint-Filler Strips: ASTM D1751, asphalt-saturated cellulosic fiber or ASTM D1752, cork or self-expanding cork.

B. Joint Fillers in Water, Sewer, or Storm Sewer Structures: Use only products meeting all regulatory requirements for joint filler in water, sewer, or storm sewer structures.

2.10 JOINT SEALER

A. Furnish hot applied joint sealer conforming to ASTM D6690, Type II.

B. Provide preformed elastomeric compression joint seal conforming to ASTM D2628.

C. Joint Sealer in Water, Sewer, or Storm Sewer Structures: Use only products meeting all regulatory requirements for joint sealer in water, sewer, or storm sewer structures

2.11 CURING MATERIALS

A. Burlap cloth according to AASHTO M-182, Class 2.

B. Sheet materials for concrete curing conforming to AASHTO M-171 for moisture loss and reflectance only.

C. Liquid membrane forming compounds for curing concrete conforming to ASTM C309.

D. Low viscosity, non-fuming high molecular weight methacrylate (HMWM) resin conforming to ASTM D2849, ASTM D93, ASTM D323, ASTM D3418, ASTM D2471, and ASTM C882.

2.12 BONDING AGENTS AND ADHESIVES

A. Epoxy Resin Bonding System: Epoxy-resin based bonding system shall conform to ASTM C881. Systems used in tankage in contact with potable water shall be NSF certified for use with potable water or food.

B. Epoxy Injection Resin: Provide epoxy injection resin capable of application, positive adherence, and strength development when applied to moist or wet surfaces at temperatures at 33o F and above. The injection shall meet ASTM

C881, Type IV, Grade 1, and Class B or C, for viscosity and ASTM C881, Type 1, Grade 3, Class B or C, for paste materials. Systems used in tankage in contact with potable water shall be NSF certified for use with potable water or food.

2.13 WATERSTOPS

A. Flexible Rubber Water stops: CE CRD-C 513, for embedding in concrete to prevent passage of fluids through joints. Factory fabricate corners, intersections, and directional changes.

1. Profile: Ribbed with center bulb.

2. Dimensions: 6 inches by 3/8 inch thick; nontapered.

B. Chemically Resistant Flexible Water stops: Thermoplastic elastomer rubber water stops, for embedding in concrete to prevent passage of fluids through joints; resistant to oils, solvents, and chemicals. Factory fabricate corners, intersections, and directional changes.

1. Profile: Ribbed with center bulb.

2. Dimensions: 6 inches by 3/8 inch thick; nontapered.

C. Flexible PVC Water stops: CE CRD-C 572, for embedding in concrete to prevent passage of fluids through joints. Factory fabricate corners, intersections, and directional changes.

1. Profile: Ribbed with center bulb.

2. Dimensions: 6 inches by 3/8 inch thick; nontapered.

2.14 VAPOR RETARDERS

A. Type C Plastic Vapor Retarder: ASTM E1745, Class C, or polyethylene sheet, ASTM D4397, not less than 10 mils thick. Include manufacturer's recommended adhesive or pressure-sensitive joint tape.

2.15 FLOOR AND SLAB TREATMENTS

A. Unpigmented Mineral Dry-Shake Floor Hardener: Factory-packaged dry combination of portland cement, graded quartz aggregate, and plasticizing admixture.

B. Penetrating Liquid Floor Treatment: Clear, chemically reactive, waterborne solution of inorganic silicate or siliconate materials and proprietary components; odorless; colorless; that penetrates, hardens, and densifies concrete surfaces.

2.16 CONCRETE MIXTURES, GENERAL

A. Prepare design mixtures for each type and strength of concrete, proportioned on the basis of laboratory trial mixture or field test data, or both, according to ACI 301.

1. Use a qualified independent testing agency for preparing and reporting proposed mixture designs based on laboratory trial mixtures.

B. Cementitious Materials: Limit percentage, by weight, of cementitious materials other than portland cement in concrete as follows:

1. Fly Ash: 25 percent.

2. Combined Fly Ash and Pozzolan: 25 percent.

3. Ground Granulated Blast-Furnace Slag: 50 percent.

4. Combined Fly Ash or Pozzolan and Ground Granulated Blast-Furnace Slag: 50 percent portland cement minimum, with fly ash or pozzolan not exceeding 25 percent.

5. Silica Fume: 10 percent.

6. Combined Fly Ash, Pozzolans, and Silica Fume: 35 percent with fly ash or pozzolans not exceeding 25 percent and silica fume not exceeding 10 percent.

7. Combined Fly Ash or Pozzolans, Ground Granulated Blast-Furnace Slag, and Silica Fume: 50 percent with fly ash or pozzolans not exceeding 25 percent and silica fume not exceeding 10 percent.

C. Limit water-soluble, chloride-ion content in hardened concrete to 0.30 percent by weight of cement.

D. Admixtures: Use admixtures according to manufacturer's written instructions.

1. Use admixture in concrete, as required, for placement and workability.

2. Use water-reducing and retarding admixture when required by high temperatures, low humidity, or other adverse placement conditions.

3. Use water-reducing admixture in pumped concrete, concrete for heavy-use slabs and parking structure slabs, concrete required to be watertight, and concrete with a water-cementitious materials ratio below 0.50.

4. Use corrosion-inhibiting admixture in concrete mixtures where indicated.

E. Color Pigment: Add color pigment to concrete mixture according to manufacturer's written instructions and to result in hardened concrete color consistent with approved mockup.

2.17 CONCRETE MIXTURES FOR STRUCTURAL AND BUILDING ELEMENTS

A. Environmental Structures, General

1. Cement for Sewage Structures

a. ASTM C595, Type I.
b. AASHTO M-240, Types IS, IS-A, IP, IPA.

2. Non-Sewage Structures: Type I or Type II cement.

3. Minimum Compressive Strength: 4000 psi at 28 days.

4. Maximum Water-Cementitious Materials Ratio: 0.45.

5. Slump Limit: 4 inches for concrete with verified slump of 2 to 4 inches before adding high-range water-reducing admixture or plasticizing admixture, plus or minus 1 inch.

6. Air Content: 5-1/2 percent, plus or minus 1.5 percent at point of delivery for 1-1/2-inch nominal maximum aggregate size.

7. Air Content: 6 percent, plus or minus 1.5 percent at point of delivery for 1-inch or 3/4-inch nominal maximum aggregate size.

8. Air Content: No more than three (3) percent for interior troweled finished floors.

B. Footings: Proportion normal-weight concrete mixture as follows:

1. Minimum Compressive Strength: 4000 psi at 28 days.

2. Maximum Water-Cementitious Materials Ratio: 0.40.

3. Slump Limit: 4 inches for concrete with verified slump of 2 to 4 inches before adding high-range water-reducing admixture or plasticizing admixture, plus or minus 1 inch.

4. Air Content: 5-1/2 percent, plus or minus 1.5 percent at point of delivery for 1-1/2-inch nominal maximum aggregate size.

5. Air Content: 6 percent, plus or minus 1.5 percent at point of delivery for 1-inch or 3/4-inch nominal maximum aggregate size.

C. Foundation Walls: Proportion normal-weight concrete mixture as follows:

1. Minimum Compressive Strength: 4000 psi at 28 days.

2. Maximum Water-Cementitious Materials Ratio: 0.40.

3. Slump Limit: 4 inches for concrete with verified slump of 2 to 4 inches before adding high-range water-reducing admixture or plasticizing admixture, plus or minus 1 inch.

4. Air Content: 5-1/2 percent, plus or minus 1.5 percent at point of delivery for 1-1/2-inch nominal maximum aggregate size.

5. Air Content: 6 percent, plus or minus 1.5 percent at point of delivery for 1-inch or 3/4-inch nominal maximum aggregate size.

D. Slabs-on-Grade: Proportion normal-weight concrete mixture as follows:

1. Minimum Compressive Strength: 4000 psi at 28 days.

2. Minimum Cementitious Materials Content: 520 lb/cu. yd.

3. Slump Limit: 4 inches, plus or minus 1 inch.

4. Air Content, Other than Troweled Finish Floors:
   a. 5-1/2 percent, plus or minus 1.5 percent at point of delivery for 1-1/2-inch nominal maximum aggregate size.
   b. 6 percent, plus or minus 1.5 percent at point of delivery for 1-inch or 3/4-inch nominal maximum aggregate size.

5. Air Content, Troweled Finish Floors: Do not allow air content of troweled finished floors to exceed 3 percent.

6. Steel-Fiber Reinforcement: Add to concrete mixture, according to manufacturer's written instructions, at a rate of 50 lb/cu. yd.

7. Synthetic Fiber: Uniformly disperse in concrete mixture at manufacturer's recommended rate, but not less than 1.5 lb/cu. yd.

E. Suspended Slabs: Proportion normal-weight concrete mixture as follows:

1. Minimum Compressive Strength: 4000 psi at 28 days.

2. Minimum Cementitious Materials Content:
   a. 470 lb/cu. yd. where maximum aggregate size of 1-1/2 inch is indicated.
   b. 520 lb/cu. yd. . where maximum aggregate size of 1 inch is indicated.
   c. 540 lb/cu. yd. . where maximum aggregate size of 3/4 inch is indicated.

3. Slump Limit: 4 inches, plus or minus 1 inch.

4. Air Content, Other than Troweled Finish Floors:
   a. 5.5 percent, plus or minus 1.5 percent at point of delivery for 1-1/2-inch nominal maximum aggregate size.
   b. Air Content: 6 percent, plus or minus 1.5 percent at point of delivery for 1-inch or 3/4-inch nominal maximum aggregate size.

5. Air Content, Troweled Finish Floors: Do not allow air content of trowel-finished floors to exceed 3 percent.

6. Steel-Fiber Reinforcement: Add to concrete mixture, according to manufacturer's written instructions, at a rate of 50 lb/cu. yd.

7. Synthetic Fiber: Uniformly disperse in concrete mixture at manufacturer's recommended rate, but not less than 1.5 lb/cu. yd.

F. Pump Bases and Equipment Bases: Proportion normal-weight concrete mixture as follows:

1. Minimum Compressive Strength: 4000 psi at 28 days.

2. Maximum Water-Cementitious Materials Ratio: 0.40.

3. Slump Limit: 4 inches for concrete with verified slump of 2 to 4 inches before adding high-range water-reducing admixture or plasticizing admixture, plus or minus 1 inch.

4. Air Content: 5-1/2 percent, plus or minus 1.5 percent at point of delivery for 1-1/2-inch nominal maximum aggregate size.

5. Air Content: 6 percent, plus or minus 1.5 percent at point of delivery for 1-inch or 3/4-inch nominal maximum aggregate size.

2.18 FABRICATING REINFORCEMENT

A. Fabricate steel reinforcement according to CRSI's "Manual of Standard Practice."

2.19 CONCRETE MIXING

A. Ready-Mixed Concrete: Measure, batch, mix, and deliver concrete according to ASTM C94 and, where fiber reinforcement used, ASTM C1116. Furnish batch ticket information.

1. When air temperature is less than 85 deg F, do not exceed 1-1/2 hours mixing and delivery time.

2. When air temperature is between 85 deg F and 90 deg F, reduce mixing and delivery time from 1-1/2 hours to 75 minutes; when air temperature is above 90 deg F, reduce mixing and delivery time to 60 minutes.

B. Project-Site Mixing: Measure, batch, and mix concrete materials and concrete according to ASTM C94. Mix concrete materials in appropriate drum-type batch machine mixer.

1. For mixer capacity of 1 cu. yd or smaller, continue mixing at least 1-1/2 minutes, but not more than 5 minutes after ingredients are in mixer, before any part of batch is released.

2. For mixer capacity larger than 1 cu. yd, increase mixing time by 15 seconds for each additional 1 cu. yd.

3. Cement which contains lumps or has partially hardened, or set shall be rejected.

4. Frozen or partially frozen aggregates shall not be used. Fine aggregate shall be allowed to drain until it has reached a relatively uniform moisture content before it is used.

C. Provide batch ticket for each batch discharged and used in the Work, indicating Project identification name and number, date, mixture type, mixture time, quantity, and amount of water added. Record approximate location of final deposit in structure.

PART 3 - EXECUTION

3.1 FORMWORK

A. Design, erect, shore, brace, and maintain formwork, according to ACI 301, to support vertical, lateral, static, and dynamic loads, and construction loads that might be applied, until structure can support such loads.

B. Construct formwork so concrete members and structures are of size, shape, alignment, elevation, and position indicated, within tolerance limits of ACI 117.

C. Limit concrete surface irregularities, designated by ACI 347R as abrupt or gradual, as follows:

1. Class A , 1/8 inch for smooth-formed finished surfaces.

2. Class C, 1/2 inch for rough-formed finished surfaces.

D. Construct forms tight enough to prevent loss of concrete mortar.

E. Fabricate forms for easy removal without hammering or prying against concrete surfaces. Provide crush or wrecking plates where stripping may damage cast concrete surfaces. Provide top forms for inclined surfaces steeper than 1.5 horizontal to 1 vertical.

1. Install keyways, reglets, recesses, and the like, for easy removal.

2. Do not use rust-stained steel form-facing material.

F. Set edge forms, bulkheads, and intermediate screed strips for slabs to achieve required elevations and slopes in finished concrete surfaces. Provide and secure units to support screed strips; use strike-off templates or compacting-type screeds.

G. Provide temporary openings for cleanouts and inspection ports where interior area of formwork is inaccessible. Close openings with panels tightly fitted to forms and securely braced to prevent loss of concrete mortar. Locate temporary openings in forms at inconspicuous locations.

H. Chamfer exterior corners and edges of permanently exposed concrete except where thresholds or other items are to be mounted to the surface.

I. Form openings, chases, offsets, sinkages, keyways, reglets, blocking, screeds, and bulkheads required in the Work. Determine sizes and locations from trades providing such items.

J. Clean forms and adjacent surfaces to receive concrete. Remove chips, wood, sawdust, dirt, and other debris just before placing concrete.

K. Retighten forms and bracing before placing concrete, as required, to prevent mortar leaks and maintain proper alignment.

L. Coat contact surfaces of forms with form-release agent, according to manufacturer's written instructions, before placing reinforcement.

3.2 EMBEDDED ITEMS

A. Place and secure anchorage devices and other embedded items required for adjoining work that is attached to or supported by cast-in-place concrete. Use

setting drawings, templates, diagrams, instructions, and directions furnished with items to be embedded.

1. Install anchor rods, accurately located, to elevations required and complying with tolerances in Section 7.5 of AISC's "Code of Standard Practice for Steel Buildings and Bridges."

2. Install reglets to receive waterproofing and to receive through-wall flashings in outer face of concrete frame at exterior walls, where flashing is shown at lintels, shelf angles, and other conditions.

3. Install pipe sleeves and casings for utility wall penetrations.

4. Install dovetail anchor slots in concrete structures as indicated.

3.3 REMOVING AND REUSING FORMS

A. General: Formwork for sides of beams, walls, columns, and similar parts of the Work that does not support weight of concrete may be removed after cumulatively curing at not less than 50 deg F for 48 hours after placing concrete, if concrete is hard enough to not be damaged by form-removal operations and curing and protection operations are maintained. Removal of forms prior to 48 hours may be authorized by Engineer when the average temperature significantly exceeds 50 deg F; however, no forms shall be removed in less than 24 hours.

1. Leave formwork for beam soffits, joists, slabs, and other structural elements that supports weight of concrete in place until concrete has achieved its 28-day design compressive strength.

2. Remove forms only if shores have been arranged to permit removal of forms without loosening or disturbing shores.

B. Clean and repair surfaces of forms to be reused in the Work. Split, frayed, delaminated, or otherwise damaged form-facing material will not be acceptable for exposed surfaces. Apply new form-release agent.

C. When forms are reused, clean surfaces, remove fins and laitance, and tighten to close joints. Align and secure joints to avoid offsets. Do not use patched forms for exposed concrete surfaces unless approved by Engineer.

D. Forms for slabs shall not be loosened or removed for at least 24 hours after placement of concrete.

3.4 SHORES AND RESHORES

A. Comply with ACI 318 and ACI 301 for design, installation, and removal of shoring and reshoring.

1. Do not remove shoring or reshoring until measurement of slab tolerances is complete.

B. In multistory or multilevel construction, extend shoring or reshoring over a sufficient number of stories or levels to distribute loads in such a manner that no floor or member will be excessively loaded or will induce tensile stress in concrete members without sufficient steel reinforcement.

C. Plan sequence of removal of shores and reshore to avoid damage to concrete. Locate and provide adequate reshoring to support construction without excessive stress or deflection.

3.5 VAPOR RETARDERS

A. Plastic Vapor Retarders: Place, protect, and repair vapor retarders according to ASTM E1643 and manufacturer's written instructions.

1. Lap joints 6 inches and seal full length with manufacturer's recommended tape.

B. Bituminous Vapor Retarders: Place, protect, and repair vapor retarders according to manufacturer's written instructions.

C. Granular Course: Cover vapor retarder with granular fill or fine-graded granular material, and indicated, moisten, and compact with mechanical equipment to elevation tolerances of plus 0 inch or minus 3/4 inch.

1. Place and compact a 1/2-inch-thick layer of fine-graded granular material over granular fill.

3.6 STEEL REINFORCEMENT

A. General: Comply with CRSI's "Manual of Standard Practice" for placing reinforcement.

1. Do not cut or puncture vapor retarder. Repair damage and reseal vapor retarder before placing concrete.

B. Clean reinforcement of loose rust and mill scale, earth, ice, paint, concrete, oil, grease, or other deleterious coatings and other foreign materials that would reduce bond to concrete.

C. Accurately position, support, and secure reinforcement against displacement. Locate and support reinforcement with bar supports to maintain minimum concrete cover. Do not tack weld crossing reinforcing bars.

D. Set wire ties with ends directed into concrete, not toward exposed concrete surfaces.

E. Install welded wire reinforcement in longest practicable lengths on bar supports spaced to minimize sagging. Lap edges and ends of adjoining sheets at least one mesh spacing. Offset laps of adjoining sheet widths to prevent continuous laps in either direction. Lace overlaps with wire.

F. Epoxy-Coated Reinforcement: Repair cut and damaged epoxy coatings with epoxy repair coating according to ASTM D3963. Use epoxy-coated steel wire ties to fasten epoxy-coated steel reinforcement.

G. Zinc-Coated Reinforcement: Repair cut and damaged zinc coatings with zinc repair material according to ASTM A780. Use galvanized steel wire ties to fasten zinc-coated steel reinforcement.

H. All reinforcing steel shall be cold-bent, if bends are required. Welding of reinforcing steel is not permitted.

3.7 JOINTS

A. General: Construct joints true to line with faces perpendicular to surface plane of concrete.

1. In order to allow for shrinkage, concrete shall not be placed against the second side of construction joints, including those for columns and walls, for at least 12 hours after that on the first side has been placed.

B. Construction Joints: Install so strength and appearance of concrete are not impaired, at locations indicated or as approved by Engineer.

1. Place joints perpendicular to main reinforcement. Continue reinforcement across construction joints, unless otherwise indicated. Do not continue reinforcement through expansion joints or sides of strip placements of floors and slabs.

2. Form keyed joints as indicated. Embed keys at least 1-1/2 inches into concrete.

3. Locate joints for beams, slabs, joists, and girders in the middle third of spans. Offset joints in girders a minimum distance of twice the beam width from a beam-girder intersection.

4. Locate horizontal joints in walls and columns at underside of floors, slabs, beams, and girders and at the top of footings or floor slabs.

5. Space vertical joints in walls as indicated. Locate joints beside piers integral with walls, near corners, and in concealed locations where possible.

6. Use a bonding agent at locations where fresh concrete is placed against hardened or partially hardened concrete surfaces.

7. Use epoxy-bonding adhesive at locations where fresh concrete is placed against hardened or partially hardened concrete surfaces.

C. Contraction Joints in Slabs-on-Grade: Form weakened-plane contraction joints, sectioning concrete into areas as indicated. Construct contraction joints for a depth equal to at least one-fourth of concrete thickness as follows:

1. Grooved Joints: Form contraction joints after initial floating by grooving and finishing each edge of joint to a radius of 1/8 inch. Repeat grooving of contraction joints after applying surface finishes. Eliminate groover tool marks on concrete surfaces.

2. Sawed Joints: Form contraction joints with power saws equipped with shatterproof abrasive or diamond-rimmed blades. Cut 1/8-inch-wide joints into concrete when cutting action will not tear, abrade, or otherwise damage surface and before concrete develops random contraction cracks.

D. Isolation Joints in Slabs-on-Grade: After removing formwork, install joint-filler strips at slab junctions with vertical surfaces, such as column pedestals, foundation walls, grade beams, and other locations, as indicated.

1. Extend joint-filler strips full width and depth of joint, terminating flush with finished concrete surface, unless otherwise indicated.

2. Terminate full-width joint-filler strips not less than 1/2 inch or more than 1 inch below finished concrete surface where joint sealants are indicated.

3. Install joint-filler strips in lengths as long as practicable. Where more than one length is required, lace or clip sections together.

E. Doweled Joints: Install dowel bars and support assemblies at joints where indicated. Lubricate or asphalt coat one-half of dowel length to prevent concrete bonding to one side of joint.

F. Suspended Slabs: Do not place joints in suspended slabs.

3.8 WATERSTOPS

A. Flexible Water stops: Install in construction joints and at other joints indicated to form a continuous diaphragm. Install in longest lengths practicable. Support and protect exposed water stops during progress of the Work. Field fabricate joints in water stops according to manufacturer's written instructions.

B. Self-Expanding Strip Water stops: Install where indicated in construction joints and at other locations, according to manufacturer's written instructions, adhesive bonding, mechanically fastening, and firmly pressing into place. Install in longest lengths practicable.

C. Water stops shall be held firmly in the correct position as the concrete is placed.

3.9 CONCRETE PLACEMENT

A. Preparation

1. Before placing concrete, verify that installation of formwork, reinforcement, and embedded items is complete and that required inspections have been performed.
    a. Prior to placement of concrete, forms, reinforcement, and subgrade shall be free of chips, sawdust, debris, water, ice, snow, extraneous oil, mortar, or other harmful substances or coatings.
    b. Any oil on the reinforcing steel or other surfaces to be bonded to the concrete shall be removed.
    c. Rock surfaces shall be cleaned by wire brush scrubbing, wet sandblasting or air-water cutting, as necessary, and shall be firm and damp prior to concrete placement.
    d. Do not place concrete on mud, dried earth, uncompacted fill, or frozen subgrade.
    e. Where concrete is placed on grade, the subgrade shall be shaped to the required grade and section, free from ruts, corrugations, or other irregularities, and uniformly compacted.

B. Concrete Placement, General

1. Concrete shall be mixed and delivered by one of the following:
    a. Central mixed concrete shall be completely mixed in a stationary mixer and transported in a truck agitator, truck mixer at agitating speed, or non-agitating equipment.
    b. Shrink mixed concrete shall be partially mixed in a stationary mixer and the mixing completed during transportation in a truck mixer.
    c. Transit mixed concrete shall be completely mixed in a truck mixer.
2. Where admixtures are used, provide agitating equipment to assure thorough distribution of admixtures used in the form of suspensions or nonstable solutions.
3. Discharge from non-agitating equipment shall be completed within 30 minutes of mixing of water, cement, and aggregates.
4. Concrete shall be uniformly mixed when delivered to the job site.

5. Concrete shall be conveyed from the mixer to the placement as rapidly as practicable by methods that will prevent segregation of aggregates or loss of mortar.

6. Place concrete only in the presence of Engineer's representative.

C. Before test sampling and placing concrete, water may be added at Project site, subject to limitations of ACI 301.

1. Do not add water to concrete after adding high-range water-reducing admixtures to mixture.

D. Deposit concrete continuously in one layer or in horizontal layers of such thickness that no new concrete will be placed on concrete that has hardened enough to cause seams or planes of weakness. If a section cannot be placed continuously, provide construction joints as indicated. Deposit concrete to avoid segregation.

1. Deposit concrete in horizontal layers of depth to not exceed formwork design pressures and in a manner to avoid inclined construction joints.

2. Consolidate placed concrete with mechanical vibrating equipment according to ACI 301.

3. Do not use vibrators to transport concrete inside forms. Insert and withdraw vibrators vertically at uniformly spaced locations to rapidly penetrate placed layer and at least 6 inches into preceding layer. Do not insert vibrators into lower layers of concrete that have begun to lose plasticity. At each insertion, limit duration of vibration to time necessary to consolidate concrete and complete embedment of reinforcement and other embedded items without causing mixture constituents to segregate.

E. Deposit and consolidate concrete for floors and slabs in a continuous operation, within limits of construction joints, until placement of a panel or section is complete.

1. Consolidate concrete during placement operations so concrete is thoroughly worked around reinforcement and other embedded items and into corners.

2. Maintain reinforcement in position on chairs during concrete placement.

3. Screed slab surfaces with a straightedge and strike off to correct elevations.

4. Slope surfaces uniformly to drains where required.

5. Begin initial floating using bull floats or darbies to form a uniform and open-textured surface plane, before excess bleedwater appears on the surface. Do not further disturb slab surfaces before starting finishing operations.

F. Cold-Weather Placement: Comply with ACI 306.1 and as follows. Protect concrete work from physical damage or reduced strength that could be caused by frost, freezing actions, or low temperatures.

1. When average high and low temperature is expected to fall below 40 deg F for three successive days, maintain delivered concrete mixture temperature within the temperature range required by ACI 301.

2. Do not use frozen materials or materials containing ice or snow. Do not place concrete on frozen subgrade or on subgrade containing frozen materials.

3. Do not use calcium chloride, salt, or other materials containing antifreeze agents or chemical accelerators unless otherwise specified and approved in mixture designs.

G. Hot-Weather Placement: Comply with ACI 301 and as follows:

1. Maintain concrete temperature below 90 deg F at time of placement. Chilled mixing water or chopped ice may be used to control temperature, provided water equivalent of ice is calculated to total amount of mixing water. Using liquid nitrogen to cool concrete is Contractor's option.

2. Fog-spray forms, steel reinforcement, and subgrade just before placing concrete. Keep subgrade uniformly moist without standing water, soft spots, or dry areas.

3.10 FINISHING FORMED SURFACES

A. Rough-Formed Finish: As-cast concrete texture imparted by form-facing material with tie holes and defects repaired and patched. Remove fins and other projections that exceed specified limits on formed-surface irregularities.

1. Apply to concrete surfaces below finished grade or not exposed.

B. Smooth-Formed Finish: As-cast concrete texture imparted by form-facing material, arranged in an orderly and symmetrical manner with a minimum of seams. Repair and patch tie holes and defects. Remove fins and other projections that exceed specified limits on formed-surface irregularities.

1. Apply to concrete surfaces exposed to view, to receive a rubbed finish, or to be covered with a coating or covering material applied directly to concrete.

C. Rubbed Finish: Apply the following to smooth-formed finished as-cast concrete where indicated:

1. Smooth-Rubbed Finish: Not later than one day after form removal, moisten concrete surfaces and rub with carborundum brick or another abrasive until producing a uniform color and texture. Do not apply cement grout other than that created by the rubbing process.
    a. Apply to exposed concrete surfaces where other rubbed finishes are not indicated.
2. Grout-Cleaned Finish: Wet concrete surfaces and apply grout of a consistency of thick paint to coat surfaces and fill small holes. Mix one part portland cement to one and one-half parts fine sand with a 1:1 mixture of bonding admixture and water. Add white portland cement in amounts determined by trial patches so color of dry grout will match adjacent surfaces. Scrub grout into voids and remove excess grout. When grout whitens, rub surface with clean burlap and keep surface damp by fog spray for at least 36 hours.
    a. Apply to exposed exterior and tops of tanks and concrete environmental structures.
    b. Apply to exposed interior of tanks and concrete environmental structures to twelve inches (12”) below lowest water surface elevation.

c. Apply at other locations where indicated.

3. Cork-Floated Finish: Wet concrete surfaces and apply a stiff grout. Mix one part portland cement and one part fine sand with a 1:1 mixture of bonding agent and water. Add white portland cement in amounts determined by trial patches so color of dry grout will match adjacent surfaces. Compress grout into voids by grinding surface. In a swirling motion, finish surface with a cork float.

a. Apply where indicated.

D. Related Unformed Surfaces: At tops of walls, horizontal offsets, and similar unformed surfaces adjacent to formed surfaces, strike off smooth and finish with a texture matching adjacent formed surfaces. Continue final surface treatment of formed surfaces uniformly across adjacent unformed surfaces, unless otherwise indicated.

3.11 FINISHING FLOORS AND SLABS

A. General: Comply with ACI 302.1R recommendations for screeding, re-straightening, and finishing operations for concrete surfaces. Do not wet concrete surfaces.

B. Scratch Finish: While still plastic, texture concrete surface that has been screeded and bull-floated or darbied. Use stiff brushes, brooms, or rakes to produce a profile amplitude of 1/4 inch in 1 direction.

1. Apply scratch finish to surfaces indicated, to receive concrete floor toppings or, to receive mortar setting beds for bonded cementitious floor finishes.

C. Float Finish: Consolidate surface with power-driven floats or by hand floating if area is small or inaccessible to power driven floats. Restraighten, cut down high spots, and fill low spots. Repeat float passes and re-straightening until surface is left with a uniform, smooth, granular texture.

1. Apply float finish to surfaces indicated, to receive trowel finish, and to be covered with fluid-applied or sheet waterproofing, or built-up or membrane roofing.

D. Trowel Finish: After applying float finish, apply first troweling and consolidate concrete by hand or power-driven trowel. Continue troweling passes and restraighten until surface is free of trowel marks and uniform in texture and appearance. Grind smooth any surface defects that would telegraph through applied coatings or floor coverings.

1. Apply a trowel finish to surfaces indicated, exposed to view, or to be covered with resilient flooring, carpet, or tile set over a cleavage membrane, paint, or another thin-film-finish coating system.

2. Finish surfaces to the following tolerances, according to ASTM E 1155, for a randomly trafficked floor surface:

   a. Specified overall values of flatness, F(F) 25; and of levelness, F(L) 20; with minimum local values of flatness, F(F) 17; and of levelness, F(L) 15.
   b. Specified overall values of flatness, F(F) 35; and of levelness, F(L) 25; with minimum local values of flatness, F(F) 24; and of levelness, F(L) 17; for slabs-on-grade.
   c. Specified overall values of flatness, F(F) 30; and of levelness, F(L) 20; with minimum local values of flatness, F(F) 24; and of levelness, F(L) 15; for suspended slabs.
   d. Specified overall values of flatness, F(F) 45; and of levelness, F(L) 35; with minimum local values of flatness, F(F) 30; and of levelness, F(L) 24.

3. Finish and measure surface so gap at any point between concrete surface and an unleveled, freestanding, 10-foot-long straightedge resting on 2 high spots and placed anywhere on the surface does not exceed 1/4 inch.

E. Trowel and Fine-Broom Finish: Apply a first trowel finish to surfaces indicated, or where ceramic or quarry tile is to be installed by either thickset or thin-set method. While concrete is still plastic, slightly scarify surface with a fine broom.

1. Apply a trowel and fine-broom finish where indicated.

2. Comply with flatness and levelness tolerances for trowel finished floor surfaces.

F. Broom Finish: Immediately after float finishing, slightly roughen trafficked surface by brooming with fiber-bristle broom perpendicular to main traffic route.

1. Apply a broom finish to exterior concrete platforms, exterior suspended slabs, steps, and ramps, and elsewhere as indicated.

G. Slip-Resistive Finish: Before final floating, apply slip-resistive aggregate or aluminum granule finish.

1. Apply according to manufacturer's written instructions and as follows:
    a. Uniformly spread 25 lb/100 sq. ft. of dampened slip-resistive aggregate or aluminum granules over surface in 1 or 2 applications. Tamp aggregate flush with surface, but do not force below surface.
    b. After broadcasting and tamping, apply float finish.
    c. After curing, lightly work surface with a steel wire brush or an abrasive stone and water to expose slip-resistive aggregate or aluminum granules.
2. Apply a slip-resistive finish where indicated and to concrete stair treads, platforms, and ramps.

H. Dry-Shake Floor Hardener Finish: After initial floating, apply dry-shake floor hardener to surfaces according to manufacturer's written instructions and as follows:

1. Uniformly apply dry-shake floor hardener at a rate of 100 lb/100 sq. ft. unless greater amount is recommended by manufacturer.
2. Uniformly distribute approximately two-thirds of dry-shake floor hardener over surface by hand or with mechanical spreader, and embed by power floating. Follow power floating with a second dry-shake floor hardener application, uniformly distributing remainder of material, and embed by power floating.
3. After final floating, apply a trowel finish. Cure concrete with curing compound recommended by dry-shake floor hardener manufacturer and apply immediately after final finishing.
4. Apply dry-shake floor hardener finish on all floor surfaces receiving float finish or trowel finish.

3.12 MISCELLANEOUS CONCRETE ITEMS

A. Filling In: Fill in holes and openings left in concrete structures, unless otherwise indicated, after work of other trades is in place. Mix, place, and cure non-shrink grout, as specified, to blend with in-place construction. Provide other miscellaneous concrete filling indicated or required to complete the Work.

B. Equipment Bases and Foundations: Provide machine and equipment bases and foundations as shown on Drawings. Set anchor bolts for machines and equipment at correct elevations, complying with diagrams or templates from manufacturer furnishing machines and equipment. Use non-shrink grout to fill in under equipment bases.

C. Steel Pan Stairs: Provide concrete fill for steel pan stair treads, landings, and associated items. Cast-in inserts and accessories as shown on Drawings. Screed, tamp, and trowel-finish concrete surfaces.

D. Use grout to form floor slopes in manholes, valve structures, channel bottoms, clarifier floors and like work where a fine grade of concrete mix is necessary for thin grading with a smooth finished surface.

3.13 CONCRETE PROTECTING AND CURING

A. General: Protect freshly placed concrete from premature drying and excessive cold or hot temperatures. Comply with ACI 306.1 for cold-weather protection and ACI 301 for hot-weather protection during curing.

B. Evaporation Retarder: Apply evaporation retarder to unformed concrete surfaces if hot, dry, or windy conditions cause moisture loss approaching 0.2 lb/sq. ft. x h before and during finishing operations. Apply according to manufacturer's written instructions after placing, screeding, and bull floating or darbying concrete, but before float finishing.

C. Formed Surfaces: Cure formed concrete surfaces, including underside of beams, supported slabs, and other similar surfaces. If forms remain during curing period, moist cure after loosening forms. If removing forms before end of curing period, continue curing for the remainder of the curing period.

D. Unformed Surfaces: Begin curing immediately after finishing concrete. Cure unformed surfaces, including floors and slabs, concrete floor toppings, and other surfaces.

E. Cure concrete according to ACI 308.1, by one or a combination of the following methods:

1. Moisture Curing: Keep surfaces continuously moist for not less than seven days with the following materials:

    a. Water.
    b. Continuous water-fog spray.
    c. Absorptive cover, water saturated, and kept continuously wet. Cover concrete surfaces and edges with 12-inch lap over adjacent absorptive covers.

2. Moisture-Retaining-Cover Curing: Cover concrete surfaces with moisture-retaining cover for curing concrete, placed in widest practicable width, with sides and ends lapped at least 12 inches, and sealed by waterproof tape or adhesive. Cure for not less than seven days. Immediately repair any holes or tears during curing period using cover material and waterproof tape.

    a. Moisture cure or use moisture-retaining covers to cure concrete surfaces to receive floor coverings.
    b. Moisture cure or use moisture-retaining covers to cure concrete surfaces to receive penetrating liquid floor treatments.
    c. Cure concrete surfaces to receive floor coverings with either a moisture-retaining cover or a curing compound that the manufacturer certifies will not interfere with bonding of floor covering used on Project.

3. Curing Compound: Apply uniformly in continuous operation by power spray or roller according to manufacturer's written instructions. Recoat areas subjected to heavy rainfall within three hours after initial application. Maintain continuity of coating and repair damage during curing period.

    a. After curing period has elapsed, remove curing compound without damaging concrete surfaces by method recommended by curing compound manufacturer unless manufacturer certifies curing compound will not interfere with bonding of floor covering used on Project.

4. Curing and Sealing Compound: Apply uniformly to floors and slabs indicated in a continuous operation by power spray or roller according to manufacturer's written instructions. Recoat areas subjected to heavy rainfall within three hours after initial application. Repeat process 24 hours later and apply a second coat. Maintain continuity of coating and repair damage during curing period.

3.14 LIQUID FLOOR TREATMENTS

A. Penetrating Liquid Floor Treatment: Prepare, apply, and finish penetrating liquid floor treatment on interior concrete floors that will not receive floor covering according to manufacturer's written instructions.

1. Remove curing compounds, sealers, oil, dirt, laitance, and other contaminants and complete surface repairs.

2. Do not apply to concrete that is less the time indicated by treatment manufacturer, minimum seven (7) days.

3. Apply liquid until surface is saturated, scrubbing into surface until a gel forms; rewet; and repeat brooming or scrubbing. Rinse with water; remove excess material until surface is dry. Apply a second coat in a similar manner if surface is rough or porous.

B. Sealing Coat: Uniformly apply a continuous sealing coat of curing and sealing compound to hardened concrete by power spray or roller according to manufacturer's written instructions.

3.15 JOINT FILLING

A. Prepare, clean, and install joint filler according to manufacturer's written instructions.

1. Defer joint filling until concrete has aged at least one month. Do not fill joints until construction traffic has permanently ceased.

B. Remove dirt, debris, saw cuttings, curing compounds, and sealers from joints; leave contact faces of joint clean and dry.

C. Install semirigid joint filler full depth in saw-cut joints and at least 2 inches deep in formed joints. Overfill joint and trim joint filler flush with top of joint after hardening.

3.16 CONCRETE SURFACE REPAIRS

A. Defective Concrete: Repair and patch defective areas when approved by Engineer. Remove and replace concrete that cannot be repaired and patched to Engineer's approval.

B. Repairing Formed Surfaces: Surface defects include color and texture irregularities, cracks, spalls, air bubbles, honeycombs, rock pockets, fins and other projections on the surface, and stains and other discolorations that cannot be removed by cleaning.

1. Immediately after form removal, cut out honeycombs, rock pockets, and voids more than 1/2 inch in any dimension in solid concrete, but not less than 1 inch in depth. Make edges of cuts perpendicular to concrete surface. Clean, dampen with water, and brush-coat holes and voids with bonding agent. Fill and compact with patching mortar before bonding agent has dried. Fill form-tie voids with patching mortar or cone plugs secured in place with bonding agent.

2. Repair defects on surfaces exposed to view by blending white portland cement and standard portland cement so that, when dry, patching mortar will match surrounding color. Patch a test area at inconspicuous locations to verify mixture and color match before proceeding with patching. Compact mortar in place and strike off slightly higher than surrounding surface.

3. Repair defects on concealed formed surfaces that affect concrete's durability and structural performance as determined by Engineer.

C. Repairing Unformed Surfaces: Test unformed surfaces, such as floors and slabs, for finish and verify surface tolerances specified for each surface. Correct low and high areas. Test surfaces sloped to drain for trueness of slope and smoothness; use a sloped template.

1. Repair finished surfaces containing defects. Surface defects include spalls, popouts, honeycombs, rock pockets, crazing and cracks in excess of 0.01 inch wide or that penetrate to reinforcement or completely through unreinforced sections regardless of width, and other objectionable conditions.

2. After concrete has cured at least 14 days, correct high areas by grinding.

3. Correct localized low areas during or immediately after completing surface finishing operations by cutting out low areas and replacing with patching mortar. Finish repaired areas to blend into adjacent concrete.

4. Correct other low areas scheduled to receive floor coverings with a repair underlayment. Prepare, mix, and apply repair underlayment and primer according to manufacturer's written instructions to produce a smooth, uniform, plane, and level surface. Feather edges to match adjacent floor elevations.

5. Correct other low areas scheduled to remain exposed with a repair topping. Cut out low areas to ensure a minimum repair topping depth of 1/4 inch to match adjacent floor elevations. Prepare, mix, and apply repair topping and primer according to manufacturer's written instructions to produce a smooth, uniform, plane, and level surface.

6. Repair defective areas, except random cracks and single holes 1 inch or less in diameter, by cutting out and replacing with fresh concrete. Remove defective areas with clean, square cuts and expose steel reinforcement with at least a 3/4-inch clearance all around. Dampen concrete surfaces in contact with patching concrete and apply bonding agent. Mix patching concrete of same materials and mixture as original concrete except without coarse aggregate. Place, compact, and finish to blend with adjacent finished concrete. Cure in same manner as adjacent concrete.

7. Repair random cracks and single holes 1 inch or less in diameter with patching mortar. Groove top of cracks and cut out holes to sound concrete and clean off dust, dirt, and loose particles. Dampen cleaned concrete surfaces and apply bonding agent. Place patching mortar before bonding agent has dried. Compact patching mortar and finish to match adjacent concrete. Keep patched area continuously moist for at least 72 hours.

D. Perform structural repairs of concrete, subject to Engineer's approval, using epoxy adhesive and patching mortar.

E. Repair materials and installation not specified above may be used, subject to Engineer's approval.

3.17 CONCRETE INTERNAL REPAIRS

A. Concrete that is honeycombed, damaged, or otherwise defective below the surface shall be repaired or removed and replaced.

B. The plan for effecting the repair shall be approved by the Engineer prior to the beginning of the repair work.

3.18 BACKFILLING NEW CONCRETE WALLS

A. Placement and compaction of fill adjacent to new concrete foundations and walls shall not begin less than 14 days after placement of concrete.

B. Walls may be backfilled simultaneously on both sides after 7 days.

C. Heavy equipment shall not be allowed within 3 feet of a new concrete foundation or wall. Compaction shall be with hand tamping or small, manually directed equipment.

3.19 LOADING

A. Do not drive on or load slabs before 14 days have elapsed after concrete placement, unless otherwise specified.

B. Loads shall not be applied to new concrete walls before 14 days have elapsed after concrete placement. Backfill on one side is considered a load.

C. Loads shall not be applied to new concrete columns before 28 days have elapsed after concrete placement, or when concrete has attained its design compressive strength; whichever comes first, unless otherwise specified on the drawings.

3.20 FIELD QUALITY CONTROL

A. Testing and Inspecting: Engage a qualified testing and inspecting agency to perform tests and inspections and to submit reports.

B. Inspections:

1. Steel reinforcement placement.

2. Headed bolts and studs.

3. Verification of use of required design mixture.

4. Concrete placement, including conveying and depositing.

5. Curing procedures and maintenance of curing temperature.

6. Verification of concrete strength before removal of shores and forms from beams and slabs.

C. Aggregate Tests

1. Aggregate stored on site for use with site-mixed concrete shall be tested from samples secured from the aggregates at the point of batching.

D. Concrete Tests: Testing of composite samples of fresh concrete obtained according to ASTM C172 shall be performed according to the following requirements:

1. Testing Frequency: Obtain at least one composite sample for each 100 cu. yd. or fraction thereof of each concrete mixture placed each day.

   a. When frequency of testing will provide fewer than five compressive-strength tests for each concrete mixture, testing shall be conducted from at least five randomly selected batches or from each batch if fewer than five are used.

2. Slump: ASTM C143; one test at point of placement for each composite sample, but not less than one test for each day's pour of each concrete mixture. Perform additional tests when concrete consistency appears to change.

3. Air Content: ASTM C231, pressure method, for normal-weight concrete; and ASTM C173, volumetric method, for structural lightweight concrete; one test for each composite sample, but not less than one test for each day's pour of each concrete mixture.

4. Concrete Temperature: ASTM C1064; one test hourly when air temperature is 40 deg F and below and when 80 deg F and above, and one test for each composite sample.

5. Lightweight Structural Concrete Unit Weight: ASTM C567, fresh unit weight of structural lightweight concrete; one test for each composite sample, but not less than one test for each day's pour of each concrete mixture.

6. Compression Test Specimens: ASTM C31.
    a. Cast and laboratory cure two sets of two standard cylinder specimens for each composite sample.
    b. To Verify Strength For Removal Of Shoring And Reshoring In Multistory Construction: Cast and field cure two sets of two standard cylinder specimens for each composite sample.

7. Compressive-Strength Tests: ASTM C39; test one set of two laboratory-cured specimens at 7 days and one set of two specimens at 28 days.

8. For field-cured specimens, when strength of field-cured cylinders is less than 85 percent of companion laboratory-cured cylinders, Contractor shall evaluate operations and provide corrective procedures for protecting and curing in-place concrete.

9. Strength of each concrete mixture will be satisfactory if every average of any three consecutive compressive-strength tests equals or exceeds specified compressive strength and no compressive-strength test value falls below specified compressive strength by more than 500 psi.

10. Test results shall be reported in writing to Engineer, concrete manufacturer, and Contractor within 48 hours of testing. Reports of compressive-strength tests shall contain Project identification name and number, date of concrete placement, name of concrete testing and inspecting agency, location of concrete batch in Work, design compressive strength at 28 days, concrete mixture proportions and materials,

compressive breaking strength, and type of break for both 7- and 28-day tests.

11. Nondestructive Testing: Impact hammer, sonoscope, or other nondestructive device may be permitted by Engineer but will not be used as sole basis for approval or rejection of concrete.

12. Flatness and Levelness Tests: Measure floor and slab flatness and levelness according to ASTM E1155 within 24 hours of finishing.

E. Additional Tests: Testing and inspecting agency shall make additional tests of concrete, at Contractor's expense, when test results indicate that requirements have not been met, as directed by Engineer. Testing and inspecting agency may conduct tests to determine adequacy of concrete by cored cylinders complying with ASTM C42 or by other methods as directed by Engineer.

F. Additional testing and inspecting, at Contractor's expense, will be performed to determine compliance of replaced or additional work with specified requirements.

G. Correct deficiencies in the Work that test reports and inspections indicate do not comply with the Contract Documents.

END OF SECTION 03300

DIVISION 9

FINISHES

09960

Tank Paint System

SECTION 09960
TANK PAINT SYSTEM

PART 1 - GENERAL

1.1 SUMMARY

A. This Section includes the following:

1. Paint coating systems for steel water storage tanks.

B. Related sections include the following:

1. Section 13210 – Elevated Water Tanks.

1.2 REFERENCES

A. ANSI/NSF 61 - Drinking Water System Components - Health Effects.

B. ASTM D16 - Terminology Relating to Paint, Varnish, Lacquer, and Related Products.

C. AWWA C652 - Disinfection of Water-Storage Facilities.

D. AWWA D102 - Painting Steel Water Storage Tanks.

E. SSPC-SP 3 - Power Tool Cleaning.

F. SSPC-SP 6/NACE 3 - Commercial Blast Cleaning.

G. SSPC-SP 10/NACE 2 - Near-White Metal Blast Cleaning.

H. SSPC-SP 11 - Power Tool Cleaning to Bare Metal.

1.3 DEFINITIONS

A. Definitions of Painting Terms: ASTM D16, unless otherwise specified.

B. Dry Film Thickness (DFT): Thickness of a coat of paint in fully cured state measured in mils (1/1000 inch).

1.4 SUBMITTALS

A. Action Submittals
   1. Product List
   2. Product Data
   3. Samples
      a. Provide color samples only

B. Informational Submittals
   1. Qualification Data
   2. Installer Certificates
   3. Manufacturer Certificates
   4. Product and Material Certificates
   5. Material and Safety Data Sheets (MSDS)
   6. Schedule of Tests and Inspections
   7. Field Test Reports
   8. Manufacturers' Instructions
   9. Product Warranties

C. Project Record Documents
   1. Product Data
   2. Field test reports

1.5 QUALITY ASSURANCE

A. Qualifications
   1. Manufacturer's Qualifications

a. Specialize in manufacture of coatings for steel potable water storage tanks with a minimum of 10 years successful experience.
b. Able to demonstrate successful performance on comparable projects.

2. Applicator’s Qualifications

a. Minimum of 5 completed projects of similar size and complexity to this Work.
b. Applicator's Personnel: Employ persons trained for application of specified coatings.

B. Regulatory Requirements

1. Comply with all applicable EPA and IDEM regulations in the products and workmanship.

1.6 DELIVERY, STORAGE, AND HANDLING

A. Packing, Shipping, Handling, and Unloading

1. Deliver materials to site in manufacturer's original, unopened containers and packaging, with labels clearly identifying:

2. Container Labeling

a. Coating or material name.
b. Manufacturer.
c. Color name and number.
d. Batch or lot number.
e. Date of manufacture.
f. Mixing and thinning instructions.

B. Storage and Protection

1. Store materials in a clean dry area and within temperature range in accordance with manufacturer's instructions.

2. Keep containers sealed until ready for use.

3. Do not use materials beyond manufacturer’s shelf life limits.

C. Waste Management and Disposal

1. Dispose of waste in accordance with all applicable environmental regulations.

2. Do not dispose of surface preparation waste or paint waste in sanitary sewer system.

1.7 SCHEDULING

A. Pre-application Meeting: Convene a pre-application meeting with Engineer and Owner two [2] weeks before start of application of coating systems. Require attendance of parties directly affecting work of this section, including Contractor, applicator, and manufacturer's representative. Review the following:

1. Environmental requirements.

2. Protection of surfaces not scheduled to be coated.

3. Surface preparation.

4. Application.

5. Disinfection.

6. Repair.

7. Field quality control.

8. Cleaning.

9. Protection of coating systems.

10. One-year inspection.

11. Coordination with other work.

1.8 WARRANTIES

1. Manufacturer's Warranty.

PART 2 - PRODUCTS

2.1 GENERAL

A. Single Source Responsibility: Coatings and coating application accessories shall be products of a single manufacturer.

2.2 MANUFACTURER

A. Each of the following manufacturers is capable of supplying most of the products specified herein:

1. Sherwin-Williams.
2. Tnemec.
3. Carboline.

2.3 COATING SYSTEMS FOR EXTERIOR STEEL

A. Exterior – Fluoropolymer:

1. System Type: Organic Zinc/Aliphatic Urethane/Fluorourethane
2. AWWA D102 Paint System: OCS-4
3. Surface Preparation: SSPC-SP 6/NACE 3.
4. Primer: Sherwin Williams Corothane Galvapac, Tnemec Series 94-H2O HydroZinc or Carboline Carbozinc 859. DFT 2.5 to 3.5 mils.
5. Intermediate Coat: Sherwin Williams Hi Solids Polyurethane 250, Tnemec Series 73 Endura-Shield or Carboline 133 Series. DFT 2.0 to 3.0 mils.
6. Finish Coat: Sherwin Williams FluoroKem HS 100, Tnemec Series 700 HydroFlon, or Carboline Carboxane 950 VOC. DFT 2.0 to 3.0 mils.
7. Total DFT: 6.5 to 11.0 mils.

8. Finish Color: As selected by Owner from manufacturer's standard colors.

9. Logo: Sherwin Williams FluoroKem HS 100, Tnemec Series 700 HydroFlon, or Carboline Carboxane 950 VOC. DFT 2.0 to 3.0 mils per coat; two coats required. Total DFT: 5.0 to 6.0 mils for Logo film thickness.

2.4 COATING SYSTEMS FOR INTERIOR STEEL

A. Interior, Wet:

1. System Type: Zinc/Epoxy.

2. AWWA D102 Paint System: ICS-5.

3. ANSI/NSF 61 Certified: For use inside potable water storage tanks.

4. Surface Preparation: SSPC-SP 10/NACE 2.

5. Primer: Sherwin Williams Corothane Galavapac, Tneemc Series 94-H2O Hydro-Zinc, or Carboline Carbozinc 621 PW. DFT 2.5 to 3.5 mils.

6. Intermediate Coat: Sherwin Williams Macropoxy 5500, Tnemec Series N140 Pota-Pox Plus, or Carboline (applied by mist coat/full coat) Carboguard 635 VOC. DFT 4.0 to 6.0 mils

7. Finish Coat: Sherwin Williams Macropoxy 5500, Tnemec Series N140 Pota-Pox Plus, or Carboline Carboguard 635 VOC. DFT 4.0 to 6.0 mils.

8. Total DFT: 10.5 to 15.5 mils.

9. Finish Color: Tank White – 15BL

B. Interior, Dry:

1. System Type: Zinc/epoxy.

2. Surface Preparation: SSPC-SP 6/NACE 3.

3. Primer: Sherwin Williams Corothane Galavpac, Tnemec Series 94-H2O Hydro-Zinc, or Carboline Carbozinc 621 PW. DFT 2.5 to 3.5 mils.

4. Finish Coat: Sherwin Williams Macropoxy 646-100, Tnemec Series N69 Hi-Build Epoxoline II, or Carboline 635 VOC. DFT 4.0 to 6.0 mils.

5. Total DFT: 6.5 to 9.5 mils.

6. Finish Color: Tank White – 15BL

2.5 ACCESSORIES

1. Coating Application Accessories: Accessories required for application of specified coatings in accordance with manufacturer's instructions, including thinners.

PART 3 - EXECUTION

3.1 EXAMINATION

A. Examine areas and conditions under which coating systems are to be applied. Notify Engineer of areas or conditions not acceptable. Do not begin surface preparation or application until unacceptable areas or conditions have been corrected.

3.2 PREPARATION

A. Surface Preparation

1. Prepare surfaces as indicated in the Product Article above.

3.3 APPLICATION

A. Weather:

1. Air and Surface Temperatures: Prepare surfaces and apply and cure coatings within air and surface temperature range in accordance with manufacturer's instructions.

2. Surface Temperature: Minimum of 5 degrees F (3 degrees C) above dew point.

3. Relative Humidity: Prepare surfaces and apply and cure coatings within relative humidity range in accordance with manufacturer's instructions.

4. Precipitation: Do not prepare surfaces or apply coatings in rain, snow, fog, or mist.

5. Wind: Do not spray coatings if wind velocity is above manufacturer's limit.

B. Ventilation: Provide ventilation during coating evaporation stage in confined or enclosed areas in accordance with AWWA D102.

C. Overspray

1. Provide protective measures to prevent overspray or dust in amounts damaging to property or causing nuisance.

D. Welds

1. All welds and irregular edges shall be brushed.

3.4 WARRANTY INSPECTION

A. Provide a warranty inspection and paint system repair eleven (11) months after substantial completion of the Work.

B. Provide Owner notice 3 weeks prior to date of inspection. Coordinate inspection date to prevent hardship in operations of Owner's utility.

C. Drain tank after Owner has isolated tank from system.

D. Conduct inspection in presence of Owner and Engineer.

E. Repair all locations of visual paint system failure by applicable surface preparation. Re-apply specified paint system and allow to cure.

F. Remove all debris in tank from repair work.

G. Provide testing and sterilization in accordance with applicable water tank construction specification.

END OF SECTION 09960

DIVISION 11

EQUIPMENT

11220

Submersible Mixers (Cleanwater1)

[DRINKING WATER MASTER SPECIFICATION]
SUBMERSIBLE MIXER
[PROJECT TITLE]
SECTION 11220

PART 1 – GENERAL

1.1 SCOPE

A. This section covers submersible tank mixing systems up to 0.5 HP in size intended for continuous use while submersed in potable water storage tanks. Each mixer shall have the ability to function continuously on a year-round basis, regardless of drain and fill cycles. Each mixer shall consist of a water-filled submersible motor, an impeller and a non-submersible control center that houses all control electronics.

1.2 THE REQUIREMENT

A. CONTRACTOR shall furnish a PWM400V3 PAX Water Mixer with a PCC405V3 PAX Control Center and install submersible mixing system together with controls and accessories necessary for a complete and operable system.

B. UTILITY shall furnish electrical conduit with 115VAC single phase voltage based on system configuration and a 20 Amp non-GFCI circuit breaker up to the point of installation of the mixing system control center.

C. UTILITY shall also provide conduit from control center to tank penetration for submersible motor cable and penetration through tank for same cable.

1.3 REFERENCE SPECIFICATIONS, CODES AND STANDARDS

A. Comply with the applicable reference specifications as specified in the General Requirements

B. Occupational Safety and Health Administration, OSHA

C. NSF/ ANSI Standard 61

D. Underwriters Laboratories Inc., UL 508

1.4.1 CONTRACTOR SUBMITTALS

A. NSF Certification

1. Copies of the NSF-61 certified listing for all submersible mixer material being placed inside the tank and headspace, including the motor and power cable.

B. Installation, Operations, and Maintenance Manuals shall be obtained from the equipment manufacturer and submitted. The following sections shall be included:

1. General equipment specifications and data sheets
2. Installation, start-up, operation, and maintenance instructions
3. Factory-recommended maintenance schedule
4. Wiring diagrams specifying what electrical wiring needs to be done onsite during and prior to the installation, and by which responsible party
5. List of equipment or tooling necessary for diagnostics, troubleshooting, repair or general maintenance

1.5 QUALITY ASSURANCE

A. Each mixing system shall be tested prior to deployment according to the manufacturer's standard factory testing practices at the factory testing facilities.

B. Complete mixing system is NSF/ANSI Standard 61 certified by NSF

1.6 WARRANTY

A. For the period beginning with installation or 3 months after shipment to Buyer, whichever is earlier and ending 60 months thereafter, the mixer, including its associated controller, is warranted to be free from defects in material and workmanship and to conform to Seller's specification applicable to the product-

PART 2 – PRODUCTS

2.1 PERFORMANCE

A. Mixing system shall completely mix reservoir according to the following minimum performance requirements. These requirements can be measured and validated after installation by operators with readily available tools such as temperature probes and total chlorine grab samplers.

1. Temperature Uniformity

   For tanks up to 4,000,000 gallons in volume: All temperatures shall converge to within 0.50°C (0.9°F) within 24 hours after mixer is installed and activated.

2. Disinfectant Residual Uniformity

   For tanks up to 4,000,000 gallons in volume: Disinfectant residual within top five feet of tank and bottom five feet of tank will converge to within 0.20 ppm within 24 hours after mixer is installed and activated. During continuous operation of the mixer, under normal disinfectant dosing parameters, disinfectant residual will converge to within 0.20 ppm at least once every 24 hours.

2.2 GENERAL

A. Mixing system consists of an impeller mounted on a submersible motor and supported approximately three feet in height from the tank floor in order for it to launch a jet of water from the bottom of the tank up toward the surface of the water. Mixer control and operation shall be independent of tank drain and fill cycles to ensure constant mixing. Wet-side of Mixer shall weigh less than 75 pounds (~34 kg) and dry-side shall weigh less than 56 pounds (~25 kg). Both wet-side and dry-side shall be able to be hoisted, installed, and/or removed by on-site personnel without additional equipment needed, and so that there is no crush hazard or entanglement hazard present, and so that weight of mixer on tank floor does not cause damage to interior coating.

B. Mixing system active components shall be elevated at a minimum of 18 inches above tank floor to avoid disturbing accumulated tank sediment or entraining particles and causing accelerated wear of moving parts.

C. Mixers using submersible pump with slit or "water sheet" or horizontal motor mounting designs are not acceptable.

D. Mixer provider must have more than 1000 installation of similar equipment in potable water tanks or reservoirs.

E. Mixers shall have no oil-filled parts

F. All wet-side mixer components shall be certified by NSF to the NSF/ANSI Standard 61

G Dry-side mixer components shall include sine filter to prolong motor life and reduce noise level.

H. Power source for mixer shall be 115VAC single phase grid power to allow unit to continue 24/7 operation where necessary.

I. No regular, periodic maintenance required on the wet-side components in typical potable water application

J. No passive mixing system allowed.

2.3 CONSTRUCTION

A. Components – wet-side: shall be NSF/ANSI Standard 61 certified.

Equipment entering tank shall not adhere to, scratch or otherwise cause damage to internal tank coating or put undue stress on the materials of the tank construction. Equipment shall fit through a standard hatch of size 12-inch x 12-inch or larger. UTILITY may prefer to puncture sidewall or ceiling of tank (in place of puncturing the hatchway) to allow motor cable entry into the tank for ease of installation and protection against freezing/ice damage.

Each submersible mixer shall consist of the following components, regardless of the power source selected:

1. Impeller
   - AISI Type 316 Stainless Steel
   - Balanced to within 0.5 gram-inches
   - Passivated per ASTM A380 to minimize corrosion
   - Not more than 8 inches in overall height
   - Not more than 4.7 inches in diameter
   - Not more than 2.4 lbs. in weight
   - Shall not create cavitation at any rotational speed up to 2500 RPM
2. Motor
   - AISI Type 304 Stainless Steel body
   - Chlorine/Chloramine resistant rubber seals
   - Fully submersible
   - Low power (0.5 HP maximum)
   - Water-filled motor
   - Water-lubricated motor
3. Mounting
   - AISI Type 316 Stainless Steel
   - Three detachable legs or pedestal mount
   - NSF/ANSI Standard 61 certified EPDM rubber, non-skid, non-scratch feet or insulating pad
   - Attachments secure motor cable away from impeller
   - Overall weight of wet-side unit not to exceed 75 lbs. to avoid damaging tank floor
   - Overall height of unit not to exceed 5 ft.

B. Components – dry-side: Each 115VAC control center shall consist of the following components:

1. Enclosure
   - Type 4 (NEMA 4) Lockable
   - Weather Resistant
   - Overall weight of control center not to exceed 50 lbs.
   - Green and Red LED Indicator lights show motor status
   - White Power Indicator Led
   - Cooling Fan
2. Motor Controller/VFD
   - Rated to 1.0 HP
   - Operating temperature range -4 ºF to 129 ºF (-20 ºC to 54 ºC)
   - HOA Switch
   - Manual speed control
   - Thermal shut-off protection built-in
   - Current overload protection built-in
   - SCADA outputs included:
     - Digital Output signal indicating motor running
     - Digital Output signal indicating fault
     - Digital Input/output signal allowing remote motor on/off
     - RS-485 or Dry Contact connections
     - 4-20mA Signal
3. GFCI-protection
   - 115VAC, single-phase, with a 300mA trip level GFCI included inside control center

4. Branch Circuit Protection
   Panel equipped with a 115VAC 20-Amp main breaker
5. Sine Filter

2.4 CONTROLS

A. Each unit shall be equipped with all necessary controls, inter-wired, to provide the following minimum functions:
   1. On/Off switch to control power to mixer.
   2. Automatically activated motor shut-off if water level drops below motor height in tank.
   3. Sine filter
   4. Any other controls shown on electrical and instrumentation drawings.

1.5 ACCEPTABLE MANUFACTURERS:

A. PAX Water Technologies (Milpitas, California)

PART 3 – EXECUTION

3.1 INSTALLATION

A. The CONTRACTOR shall furnish services of a factory-trained installation contractor or crew having experience with installation procedures and operation and maintenance requirements for the type of equipment installed under these specifications. Mixer must be able to be installed through a 12”x12” hatch. Mixer must be able to be installed without draining tank or taking tank out of service. Wet-side of Mixer shall weigh less than 75 pounds (~34 kg) and dry-side shall weigh less than 55 pounds (~25 kg). Both wet-side and dry-side shall able to be hoisted, installed, and/or removed by on-site personnel without additional equipment needed, and so that there is no crush hazard or entanglement hazard present, and so that weight of mixer on tank floor does not cause damage to interior coating.

B. Tank penetration is recommended to be above tank water line, typically through the hatch sidewall.
   1. Fitting will prevent moisture intrusion into tank and ideally be horizontally oriented.
   2. Fitting shall be 1” diameter fitting to allow cable to pass through.
   3. Strain relief for power cable shall be part of the contractor-supplied fitting for tanks more than 30’ in depth.
   4. For tanks more than 70’ in depth, or at customer’s discretion, a water-tight penetration may be installed under the water-line.

C. Installation of the in-tank (“wet-side”) components may be performed in any of the following ways:
   1. Installation by a factory-trained and drinking-water-certified potable water tank diver.
   2. Installation by personnel with confined space training while the tank is drained and empty.
   3. Installation by tank manufacturer personnel during tank manufacture.
   4. Installation below a hatch opening in a full tank utilizing a chain.

D. Installation of the outside-of-tank (“dry-side”) components may be performed by:
   1. Third party representatives or CONTRACTORS according to the manual provided.
   2. UTILITY personnel according to the manual provided

E. The mixer and control center shall be installed in accordance with approved procedures submitted and Manufacturer’s instructions supplied, unless otherwise approved in writing from the Manufacturer.

3.2 TRAINING

A. PAX Water Technologies staff (or their representatives) will instruct designated UTILITY personnel in the safe and proper operation of the PAX Water Mixer. This training will reference the operations manual provided with equipment and show how to check for proper functioning of the equipment.

cleanwater**1**
550 Sycamore Drive | Milpitas, CA 95035
Tel: 858-218-3745 | Email: info@cleanwater1.com

cleanwater**1**.com

© 2023 cleanwater1, inc. Subject to change without prior notice.

The information provided in this literature contains merely general descriptions or characteristics of performance which in actual case of use do not always apply as described or which may change as a result of further development of the products. An obligation to provide the respective characteristics shall only exist if expressly agreed in the terms of a written contract.

DIVISION 13

SPECIAL CONSTRUCTION

13130

Factory-Built Control Valve Station (EFI)

Section 13130

FACTORY-BUILT CONTROL VALVE STATION

PART 1: GENERAL REQUIREMENTS

SCOPE OF WORK

The contractor shall furnish and install one (1) - factory built, factory delivered, below ground control valve station, in a steel welded capsule with all necessary internal piping, valves, fittings, supports, meters, control valves, controls, and other necessary appurtenances as shown on the plans and specified herein.

The station shall be complete when delivered and will not require internal contractor construction except to install the power service through the service entrance conduit provided for that purpose and to connect the main water service to the required points and other work as may be listed in the Section for CONTRACTORS INSTALLATION REQUIREMENTS.

PROGRESSIVE PAYMENTS

The contractor may carry with their pay requests a request for progressive payments on the part of the equipment manufacturer for the equipment covered in this section. The Manufacturer shall submit a proper and timely pay request to the Contractor. The pay request shall include a detailed listing of stored materials, sub-assemblies and work-in-process.

No more than an aggregate of ninety percent (90%) of the contractor's purchase value shall be approved for payment prior to delivery of the equipment.

The Manufacturer’s pay request to the Contractor shall include electronic or printed photographs of work-in-process with a proper description of the item and its use in the equipment.

The manufacturer’s pay request shall include an affidavit signed by an officer of the manufacturing company and notarized, attesting in detail to the on-site presence of the materials and the condition of the work-in-process.

CONTRACTOR INSTALLATION REQUIREMENTS

The contractor shall provide the crane and lifting rigging to set the station on the foundation designed by the engineer, as shown in the plan set. The foundation shall be built by the contractor as directed by the engineer. Following the placement of the station, the contractor will be required to anchor the station to the foundation. The contractor shall supply the anchor bolts. Once the station is anchored the contractor shall backfill around the station and install the anodes.

CONTRACTORS' RECOGNITION OF A VALID EQUIPMENT PROPOSAL

To avoid a displacement of responsibility, the Station manufacturer alone shall propose to contractors on the assembled equipment covered by this section of these contract documents. An officer of the station manufacturer shall sign the proposal.

Bidding Contractors will be instructed NOT to accept or base their bid on equipment proposals from a representative, third-party agent or intermediary.

The Contractors shall provide the Engineer of Record with an electronic copy of the unpriced Equipment Proposals from any proposing manufacturers to ensure that all proposals are direct from and signed by each proposing manufacturer.

MANUFACTURER'S RESPONSIBILITY FOR PERFORMANCE

The Specifications and Drawings for this equipment do not necessarily include all the details for the design and fabrication of this factory-built equipment. The Drawings are generally schematic, but the specifications do call out strict requirements for known methods, components and assemblies that will result in a full, complete and functional station. As such, the Manufacturer shall accept and hold complete responsibility for the functionality of the station and its workings.

BASIS OF DESIGN MANUFACTURER

The BASIS OF DESIGN station equipment is by Engineered Fluid, Inc., having been deemed to represent the minimum level of quality, performance, and service acceptable for this equipment. Engineered Fluid, Inc. is represented by Mr. Tim Hovda of Engineered Solutions Midwest, telephone 317-409-4116.

ALTERNATE MANUFACTURERS

Alternate manufacturers may propose on the equipment outlined in these documents, provided that the alternate manufacturers take no exceptions to the contract documents and these manufacturers provide the PRE-BID SUBMITTAL information as listed in this specification.

Alternate manufacturers are eligible to provide contractor proposals for this equipment. However, these listed manufacturers must have provided a PRE-BID SUBMITTAL to the Engineer of Record no less than ten (10) days prior to the bid date.

PRE-BID SUBMITTAL DOCUMENTS

Along with the requirements for post-bid submittal documents provided for elsewhere in these documents, all alternate manufacturers offering equipment proposals, without exception, for this equipment shall provide to the engineer at least ten (10) days before the bid date the following PRE-BID SUBMITTAL documents for the pump station and containing at a minimum:

1. “D” sized only, station mechanical drawing sheets fully to scale and fully annotated showing;
   a. A PLAN VIEW of all mechanical equipment, piping and devices necessary for system operation, including NEC Electrical Clearances;
   b. A lengthwise SECTION VIEW;
   c. A Sidewise SECTION VIEW;
   d. A complete STRUCTURAL PLAN VIEW of the steel base for the pump stations.
2. “D” sized only sheets showing;
   a. A POWER ONE LINE DIAGRAM annotated and showing all power components;
   b. A PROCESS & INSTRUMENTATION DIAGRAM (P&ID) showing all components, devices and circuits, including PLC equipment, for complete control and operation of the station.

3. A detailed drawing of the capsule used to house the station, including anchoring and assembly methods.

4. An affidavit signed by an officer of the station manufacturer attesting to the fact that the buried capsule shall be constructed with the specified lap seam joint for joining the side sheet to the top and bottom sheets of the capsule.

PRE-BID SUBMITTAL documents will not be accepted after the specified date; it is the Bidding contractor's responsibility to determine which of the listed manufacturers have turned in their PRE-BID SUBMITTAL documents.

The Engineer of Record shall review the PRE-BID SUBMITTALS for adherence to the contract documents.

The PRE-BID SUBMITTAL shall be provided in one (1) hard paper copy bound in a three-ring binder with a Table of Contents and tabs for each pump station and with one (1) electronic copy on CD placed inside the three-ring binder in a suitable pocket.

For the manufacturers that are approved for proposing on the specified equipment, the approval of their PRE-BID SUBMITTAL in no way excuses them from providing a full set of submittal documents that are in full conformance to the contract documents for detailed review by the Engineer post-bid.

<u>POST BID SUBMITTAL</u>

Equipment submittals shall be bound and a minimum of two (2) electronic copies on CD and or USB Flash Drive provided. The submittals shall contain a minimum of two (2) full-size drawings, size 24" x 36"; one (1) each covering the station and the electrical control schematic. The station drawing shall be specific to this project, in at least three (3) different views, to scale and illustrate the National Electrical Code (NEC) clearances per Section 110-26 of the Code. The submittal documents will be complete with data sheets covering all major components that make up the station and the UL/ETL file number under which the manufacturer is listed, service department personnel statement as detailed in the

specifications and be complete with the manufacturer's formal warranty policy. **The submittal booklets shall be complete with a full-size photocopy of the manufacturer's combination UL/manufacturer logo Packaged Pumping Systems label.**

Two (2) submittal reviews of this item will be accomplished at no cost to the submitting contractor. However, all subsequent reviews will be charged to the submitting contractor at the design engineer's standard hourly billing rate.

QUALITY ASSURANCE

The supplied equipment shall be designed, constructed, and installed per the best practices and methods, operate satisfactorily when installed as shown on the contract drawings and operated per the manufacturer's recommendations.

THIRD-PARTY INSPECTION LISTING (STATIONS 600V MAX.)

The station manufacturer shall be required to affix to the station an UNDERWRITERS LABORATORIES (UL) LABEL attesting to the compliance of the station equipment under the PACKAGED PUMPING SYSTEMS (QCZJ) UL Listing Category and/or INTERTEK TESTING SERVICES (ETL) LABEL attesting to the compliance of the station equipment under PACKAGED PUMPING SYSTEMS. The ETL label shall state the station conforms to UL STD 778 and is certified to CAN/CSA STD C22.2 NO. 108.

FACTORY ACCEPTANCE TEST

When the station is complete but prior to final testing and shipment, the Engineer and Owner shall be given two (2) weeks' notice of the testing date. The Engineer and/or Owner shall be present to view the station and final testing so as to review the station for conformance to the contract drawings and specifications.

Any deficiencies noted during this Acceptance testing shall be rectified during the visit where possible. Those deficiencies not correctable during the visit shall be noted and corrected within seven (7) working days. A signed notice of such shall be forwarded to the Engineer of record by the Quality Assurance Manager and an officer of the station manufacturer.

SHIPPING AND DELIVERY

The specified equipment shall be delivered by the manufacturer FOB DESTINATION. Therefore, the station manufacturer shall hold full responsibility for the condition and completeness of the equipment upon its delivery.

The Engineer shall have the right to inspect the equipment for deficiencies in quality and/or condition prior to unloading.

If, in the view of the Engineer or Engineer’s inspector, the equipment is deficient when delivered, delivery shall be refused.

SPECIFIED COMPONENTS

Within the body of this specification and on the drawings, certain components are listed by name and/or model number for at least One (1) manufacturer's specific product. As such, no "OR EQUAL" is listed or allowed where at least one manufacturer is listed.

These components listed have been chosen by the Engineer and Owner due to their knowledge of and experience with the listed components.

No other components other than those listed are acceptable.

FACTORY START-UP AND TRAINING SERVICE

Without exception, the station manufacturer, or its direct subsidiary, is directly responsible for station start-up and operator training. Third-party contractors, agents, or sales representatives are not allowed to start up the station or the equipment therein. As such;

1. The Factory Start-up Service Technician shall be a regular employee of the station manufacturer or its direct subsidiary.
2. The booster pumping system manufacturer and controls integrator shall provide two (2) electronic O&M's in pdf format containing as-built final system drawings, I/O listings, wiring diagrams, and operating and maintenance information. The submitted manuals shall be sufficient to facilitate the operation, removal, installation, programming, configuration, adjustment, calibration, testing and maintenance of all components and instruments. Final software listings of the operational ladder logic shall be provided herewith.

MANUFACTURER'S WARRANTY

The warranty for ALL equipment is the sole responsibility of the station manufacturer. The manufacturer's warranty statement shall be provided in written form, in both the Submittal documents covering the specified equipment and the O&M manuals provided with that equipment.

The station warranty shall provide the Owner with single-source responsibility for all components specified herein and the system as a whole. That single-source warranty provider shall be the station manufacturer. Third-party suppliers, service contractors, "Pass-through" warranties and service by the sales representative are not allowed.

Said manufacturer's warranty shall at a minimum, cover:

1. One (1) year commencing upon successful start-up, after authorized manufacturer's start-up, not to exceed eighteen (18) months from the date of manufacture completion.

2. The warranty period shall cover all components regardless of the original manufacturer's warranty for equipment and components within the station.

3. The manufacturer's warranty shall cover all equipment, components and systems provided in or with the station by the manufacturer of the station, exclusive of those components supplied by and/or installed by others independent of the manufacturer of record for this station.

4. The station manufacturer will bear all costs, for both labor and materials, for the replacement and/or repair of faulty or defective components. No cost shall be incurred by the Owner for this work during the warranty period.

5. The manufacturer's warranty policy is amended only by items considered consumable, i.e., light bulbs, pump seals, pump packing, lubricants and other maintenance items consumed by usage.

6. No assumption of contingent liabilities for any component failure during the manufacturer's warranty is made.

7. The warranty pertains only where the equipment has been operated in strict accordance with the manufacturer's instructions and requirements. Evidence of misuse or modification to the equipment voids the warranty.

If the submitted written manufacturer's warranty does not meet the minimum requirements as set forth above, that submittal will be immediately rejected.

GENERAL LIABILITY INSURANCE

The water distribution station manufacturer shall furnish premises/operations and products/completed operations general liability insurance from an insurance company with a rating of A-V according to the most recent Best's Key Rating Guide, in an amount equal to $1,000,000 per occurrence and up to $11,000,000 total with Umbrella.

The insurance certificate must be included with the manufacturer's submittal. The coverage must be provided by an insurance carrier licensed and admitted in the state of manufacture.

PART 2: PRODUCTS AND COMPONENTS

EQUIPMENT CAPSULE DESIGN STANDARDS

The equipment capsule shown is suitable by construction and materials for direct burial with water-tight integrity.

The size shown for the capsule is appropriate for National Standard-mandated clearances and for proper clearances above, below and around equipment to provide for safe servicing, removal and reinstallation of that equipment.

The entrance manway in the location shown shall be sized to provide eventual removal and replacement of any component within the station without altering the station to

accomplish that task.

The drawings for this equipment illustrate equipment centerline and clearance/maintenance dimensions around the major equipment items. These dimensions are the minimum allowed.

EQUIPMENT CAPSULE - CONSTRUCTION

The plate steel employed throughout the capsules shall be 1/4" as minimum thickness and meet or exceed the requirements for ASTM A-36.

The structural shapes, channels and angles used shall be of the thickness/weight as shown on the submittals for this item and shall meet or exceed the requirements for ASTM A-36.

CAPSULE DIMENSIONS

The capsule shall be a rolled, vertical cylinder steel capsule of sealed welded construction with top, bottom and side sheets with supporting structure as required.

The capsule shall be sized as shown on the drawings.

CAPSULE REINFORCEMENT

The top, bottom and side sheets of the capsules shall be supported and reinforced by a combination of standard structural shapes of the sizes and weights as shown in the submittal documents for this item.

The structural rectangular or square tubing shall be of the wall gauge as shown in the submittal documents for this item and shall meet or exceed the requirements for ASTM A-500 Grade.

PLATE/SHEET CAPSULE JOINTS – LAP SEAM WELD

The construction of the capsule as a buried system requires construction techniques necessary to ensure a long service life. The side sheet – top sheet joint construction is specified to provide maximum coating effectiveness and minimal corrosion potential by the elimination of sharp edges or abrupt transitions where the coating process cannot maintain full film thickness and so promote corrosion and undercutting.

The plate forming the top and bottom of the capsules shall be rolled-edge, cold-formed prior to assembly, so as to form a lap joint with the side wall.

The lap joint shall be continuously full fillet welded on the capsule interior by hand and the exterior by machine to form an airtight seal.

The lower side wall continuous weld shall be an average 1-1/2 inches above the capsule floor. Capsules without lap joints will not be accepted.

TANK SHEET PENETRATION WELDS

Any ferrous metal device, namely water transmission piping and conduits passing through the capsule wall, shall be welded fully along its circumference or length, being welded on both sides of the capsule wall using a metal-added, MIG shielded arc welding process.

LIFTING PLATES AND EQUIPMENT LIFTING EYES

Four(4) lifting plates of 3/8 inch minimum thickness shall be placed about the perimeter of each capsule to facilitate the lifting and handling of the station.

Interior lifting eyes shall be placed over each piece of equipment in excess of 60 pounds in weight.

FLOOR SUMP

The capsules will be complete with a sump. The sump shall be a minimum of eighteen (18) inches in diameter x eight (8) inches deep; the sump shall be provided with a four (4”) inch plugged outlet for gravity outflow as required.

ENTRANCE MAN-WAYS - RAISED MOUNTED SCUTTLES

The entrance man-ways shall be Bilco Model MF-50 roof scuttle.
with a minimum clear inside opening of forty-eight (48) inches by forty-eight (48”) inches.

The scuttle covers shall be made of 11-gauge aluminum on the exterior. The scuttle covers shall be insulated with a minimum of one (1) inch of fiberglass insulation, covered and protected by an 18-gauge aluminum liner.

The entry locks shall be flush-mounted, in the scuttle riser in a position to be protected from the elements by the cover skirt as detailed on Bilco Drawing 6184**.** The locks will be of the pin tumbler type, dead bolt, with an inside safety release. Two (2) keys will be provided for each station, on a key ring complete with the manufacturer's identification. No locking devices or other penetrations of the cover shall be allowed.

The hatch shall be bolted to a hatch extension of the capsule.
Bolted connection should stay above the surface of the finished grade to allow changing out the hatch. Non-shrink closed-cell foam gasket shall be used to make a positive seal between the top of the hatch extension and the bottom flange on the hatch.

ACCESS LADDER

An all-aluminum access ladder will be provided for each station. The ladders shall be a Type 1A with a 300lbs. load rating and meet ANSI A14.3 fixed ladder standard. The ladders will have serrated rungs with 3" full I-Beam side rails.

The uppermost ends of the side rails will be protected by plastic caps bolted into

place. The complete access ladder will be bolted into place at a minimum of two (2) points, both top and bottom, to be easily removable to facilitate equipment maintenance.

LADDER ASSIST DEVICE

A Bilco Model LU-1 ladder-up safety post shall be installed on the vertical centerline of each ladder.

CAPSULE CATHODIC PROTECTION

The station manufacturer shall furnish for the Contractor's proper installation two (2) seventeen-pound packaged magnesium anodes for cathodic protection.

The anodes shall be H-1 alloy cast to meet ASTM B-80, alloy AZ-63. The anode lead wires shall be silver soldered and potted to be waterproof.

The anodes shall be buried equally spaced around the station and connected by heavy copper wire to lugs on the station provided for that purpose.

ANODE TEST STATION

An anode test station shall be furnished, consisting of individual pushbutton switches for each of the magnesium anodes installed around the perimeter of the steel capsule.

The Test Station pushbutton switches will allow current to flow between the respective anode and the steel capsule passing through a Test Station Milliammeter, mounted on the Test Station door, so that when the pushbutton is held in the depressed position, the operator can observe needle deflection or lack thereof.

The milliammeter shall have a range of 0-30 mA.

Wire leads each anode shall enter the capsule through one or several watertight, compression fittings in the capsule wall or in the hatch extension wall. The separate leads shall be run in conduit to the Test Station mounted on the capsule wall as shown.

A station capsule cathodic system lug shall be provided as required to complete the system circuit to the anodes.

SAFETY FLOOR MATTING

That space from the entrance ladder to the control panel and the entire NEC clearance area shall be covered with a rubber drainage runner. The runner shall be medium duty, 1/2 inch minimum thickness of open slot design allowing fluids to drain. The runner shall have a tread design to promote sure footing. The underside of the runner shall have a raised knob design to permit aeration and drainage, and to reduce runner fatigue. The runner shall not be glued to the floor.

PIPING-TRANSMISSION – STEEL PIPE

The piping shall conform to AWWA Standard C-200.

Piping 3 inches in diameter and above shall be steel and conform to material specification ASTM A-53(CW) for nominal pipe size four (4) inch and smaller and ASTM A-53(ERW) Grade B for nominal pipe size five (5) inches and larger. Steel butt-welding fittings shall conform to material specification ASTM A-234 Grade WPB and to the dimensions and tolerances of ANSI Standards B16.9 and B16.28, respectively.

Forged steel flanges shall conform to material specification ASTM A-105 Class 60 and/or ASTM A-181 for carbon steel forgings and to the dimensions and tolerances of ANSI Standards B16.5 as amended in 1992 for Class 150 and Class 300 flanges.

The piping sizes shall be as shown on the drawing.
Size 10 inch and below - Schedule 40
Size 12 inch and above - Standard weight (.375" wall)

PIPE WELDING

All pipe welds shall be performed by certified welders employed by the pump station manufacturer. As part of the equipment submittal, the pump station manufacturer shall provide copies of the welding certificates of the employees who are to perform the pipe welds.

Shop welders shall be certified in accordance with ASME BPVC Section IX or AWS D1.1. Certification shall be done by an independent testing laboratory, giving certification for the weld positions for which the tests were performed.

PIPE SURFACE PREPARATION

All piping inside and outside surfaces shall be prepared by grit blasting or other abrasive blasting, prior to any welds taking place to a minimum SP-6 finish.

PIPE CUTTING

Piping of 4" diameter and smaller may be cut by saw.

Piping of 6" diameter and larger shall be bevel cut, and Oxyfuel or Plasma-arc cutting techniques shall be used to assure and facilitate bevel pipe cuts.

SADDLE CUTS AND WELDS

Saddle cuts in pipe made in preparation for a saddle weld of a pipe at an angle to a pipe shall be made with numerically controlled, plasma cutting machines. Similarly, saddle end cuts to pipes to make a saddle mating piece shall be done with the same numerically controlled plasma cutting equipment.

When the two saddle cut pieces are mated and welded with the MIG process, the

internal finished weld shall be smooth and free of inclusions, crevices and other corrosion sites.

PIPE WELDING TECHNIQUES

Pipe welds shall be performed by metal added, inert gas shielded arc welding (MIG) techniques wherein the weld heat settings, the wire feed speed and the traverse speed of the work below the welding are numerically set to assure proper weld fusion and penetration and repeatable welds.

In all cases, short circuit transfer, spray transfer or pulse-arc transfer modes of the gas metal arc welding process shall be used.

When utilizing the short circuit mode, shielding gas consisting of 50% carbon dioxide and 50% argon shall be used. When utilizing the spray or pulse-arc transfer modes, a shielding gas consisting of 5% carbon dioxide and 95% argon shall be used.

In all cases, welding wire with a minimum tensile strength of 70,000 psi shall be employed.

All flange welds and butt welds of equal-size pipe shall be a single continuous nonstop weld around the complete circumference of the pipe. Whenever possible, vertical up weld passes will be applied to all pipe welds. No vertical down weld passes will be allowed.

Completed pipe welded assemblies shall create no internal obstruction, restriction or create any unintended sources of water deflection.

Piping of six (6) inch diameter and larger shall require a minimum of two (2) weld passes to complete each weld. The first pass, or root pass, shall be applied at the bottom of the bevel cut using the short circuit transfer welding mode, and the second pass, or cap pass, shall be applied over the root pass using the spray or pulse arc transfer welding modes to insure that at a minimum the total weld thickness shall be equal to thinnest of the two pieces being welded together.

The pipe shall be sandblasted, as specified elsewhere, before pipe welding and after pipe welding, before fusion-bonded epoxy is applied.

WELD STANDOFFS

No welding shall be performed on fusion-bonded coated piping after the coating process has been performed.

Where any piping is to be welded after the application of fusion-bonded epoxy coating to the inside of the pipe, at the point of the weld, a weld standoff must be welded to the pipe prior to the coating. The weld shall be made to the standoff and not onto the pipe.

TANK/WALL PENETRATION COATING PROTECTION SLEEVE

Where a fusion-bonded epoxy interior-coated pipe passes through the steel tank shell or a steel wall section, prior to fusion-bonded coating of that pipe, a pipe sleeve shall be welded over the pipe in the area where the pipe passes through the steel sheet.

The sleeve shall be one-half (1/2”) inch in thickness and fit closely over the transmission pipe. The sleeve shall be seal-welded to the transmission pipe at each end with a full and continuous fillet weld.

Following the welding of the sleeve to the transmission piping, the sleeve welds and the sleeve shall be grit blasted to an SP-6 finish so the pipe is prepared for fusion-bonded epoxy coating by the process specified elsewhere in these documents.

PIPE SUPPORTS

Pipe supports by minimum sizing for:

- 8" and smaller piping shall be 2" x 3" x 3/16" wall rectangular tubing;
- 10" and larger piping shall be 3" x 4" x 1/4" wall rectangular tubing;
- 6" and larger piping shall be provided with "kick" bracing projecting fully from the underside of the pipe to the floor at an angle of no less than 15 degrees from vertical out at a right angle to the run of the pipe being supported. These "kick" braces shall be in addition to the vertical pipe supports called out above.

Pipe supports are to be fully welded at both endpoints to the pipe and steel floor where required.

Where components are to be supported and may require disassembly at some time, the supports for these components shall be welded at the bottom and bolted at the top by use of a bolt yoke welded to the top of the support and bolted into the flange connection, picking up at least two bolts.

FUSION BONDED EPOXY INTERNAL PIPE COATING

The internal surfaces of piping to be fusion-bonded coated shall be grit blasted to an SP-10 finish with the finish profile required by the coating material manufacturer.

The internal, wetted surfaces of the steel transmission piping shall have a Fusion Bonded Epoxy Coating on the interior pipe surface. The coating shall be applied and meet the testing requirements of Table 1 and Table 2, with the exception of Table 2 section 7 per AWWA C-213.

The powder coating product shall be National Sanitation Foundation (NSF) Standard 61 certified material.

Prior to shipment of the station, the station manufacturer shall provide in writing to the Engineer certification that the fusion-bonded epoxy coating has been applied to all internal

surfaces of the steel piping using the proper method. Said certification shall show under the station manufacturer's letterhead:

- Date of application;
- Material manufacturer and product designation, including a product data sheet for the coating;
- Applier of the fusion bonded coating, name, address and phone number;
- Notarized signature of an officer of the station manufacturing company stating the fusion-bonded epoxy coating was applied to AWWA Standard C213-91 or the latest revision.

COATINGS - CORROSION PROTECTION

All interior and exterior surfaces of the exposed steel structure, transmission piping, and fittings shall be gritblasted equal to commercial blast cleaning (SSPC-SP6). Following fabrication, all exposed surfaces of the station, interior and exterior, shall be coated according to the following requirements.

WELDMENT PRIME COATING

All weldments will be pretreated by hand to provide additional corrosion protection using the same product as the base coat. Following the pretreatment full coating application shall take place.

BASE COATING

The base coating shall take place immediately after surface preparation. The protective coating shall consist of a two-component, high solids, high build, fast drying epoxy system for protection and finishing of steel and having excellent corrosion-resistant properties. The epoxy system shall be self-priming and require no intermediate coatings.

TOP COATING

Following the base coating application, a full finish coating application shall take place. The protective coating shall consist of a two-component, high solids, high build, fast drying epoxy system for protection and finishing of steel and having excellent corrosion-resistant properties. The epoxy system shall be self-priming and require no intermediate coatings. The base and finish coats shall provide a total dry mil thickness of 8.0 mils. The finish shall be “flint gray” in color.

POST-ASSEMBLY COATING

Following assembly and just prior to shipping, there shall take place a thorough cleaning of the floor of the station, followed by a rolled-on coating of the two-part epoxy coating to cover over any scuffing or scaring that might have occurred during assembly.

FLOOR COATING AND CORROSION PROTECTION SYSTEM

The exposed surfaces of the structural steel base shall have a non-skid coating of a two-component, 100% high-performance aromatic polyurea spray elastomer system with zero VOC (Volatile Organic Compounds), 100% solid. The coating shall offer outstanding performance and superior elastomeric protection for various substrates. The coating shall be designed as a user-friendly product for moisture-insensitive applications because of its pure polyurea chemistry, and offer exceptional adhesion properties for properly prepared substrates. The high-performance formulation shall produce an excellent skin formation for chemical resistance and moisture protection. The coating shall be dark gray in color.

Both the Iso "A" Side and Resin "B" Side shall be preconditioned between 70-90°F before application. Iso "A" and Polyol "B" components must be pumped by low-pressure transfer pumps to a suitable high-pressure proportional pumping system.

Temperature Settings:	
Iso "A" Block Heater:	140-160°F
Resin "B" Block Heater:	140-160°F
Hoses (Iso and Polyol)	140-150°F
Equipment Hydraulic Pressure:	2,000-2,500PSI

CHEMICAL TECHNICAL DATA:	
Mix Ratio by Volume: Gel Time:	1A:1B 6-9 Sec
Tack Free Time:	9-12 Sec
Viscosity (cps) @ 77°F	
"A" Iso Side:	1,000±100
"B" Resin Side:	370±50
Material Density (lbs/gal) @ 77°F "A"	
"A" Iso Side:	9.5 lbs/gal
"B" Resin Side:	8.4 lbs/gal.

BASIC PHYSICAL PROPERTIES:
All tests are performed by OCM Test Laboratories.

- ISO 17025 Certified
- American Association for Laboratory Accreditation (A2LA)

Test Name	Test Methods	Value
Hardness Shore D	ASTM D2240	60±1
Coefficient of Friction	ASTM D1894	
Static		0.305
Kinetic		0.127
Dielectric Const.	ASTM D150	3.6
Dissipation Factor	ASTM D150	0.031
Volume Resistance	ASTM D257	2.3x1014 ohm cm
Elongation	ASTM D412	162%
Flexural Strength ASTM D790		2,630 PSI
Flexural Modulus	ASTM D790	0.056 MSI
Fungus Test	MIL-STD 810F	Pass
Pull-off Test–Adhesion	ASTM C297	
To Metal – No Primer		1,800 PSI

To Metal – XPM Primer		1,910 PSI
To Metal – LXSF515 Primer		1,870 PSI
Taber Abrasion (gm Loss/1000 cycles)	ASTM D4060	0.06980
Tear Strength	ASTM D624	783 ppi
Tensile Strength	ASTM D412	3,432 PSI
Water Vapor Trans.	ASTM E96	0.499 Grains/Hr Sq.Ft.

The chemical resistance testing for the coating shall be per ASTM D543 for immersion in fluids methods. Additional product certifications shall include USFDA Coatings for Incidental Food Contact Applications Certified by Keller and Heckman LLP and MIL-STD-810F.

SERVICE CONNECTIONS ON INTERNAL PIPING

All plumbed devices within the station eventually requiring service, such as meters, control valves, pumps and like equipment, shall be easily removed from the piping by the presence of appropriately placed and sufficient quantity of adaptors and couplings as shown on the drawings; no less than the quantity of couplings and adaptors shown shall be allowed.

RESTRAINING POINTS

The main inlet and outlet piping to the station shall each be provided with two (2) restraining points as welded on "eyes" or similar device welded to the the capsule wall adjacent to the pipe penetration as shown to facilitate the attachment of joint restraint tie rods or other device to be used in retarding any pipe movement at the connections.

COMPRESSION COUPLINGS

The station piping shall include a variety of compression-type, flexible couplings to prevent binding and facilitate the removal of associated equipment. These couplings are to be where shown on the plans. In lieu of a compression coupling, a flanged coupling adapter (FCA) may be used.

Grooved fittings may not be used under any circumstance.

All compression couplings or flanged coupling adapters (FCA), and flexible connectors/expansion joints shall include a minimum of two (2) zinc-coated steel threaded rods across the joint with appropriate bolted restraining points.

LINE PRESSURE GAUGES

Combination pressure gauges shall have a built-in pressure snubber and have 4-1/2" minimum diameter faces and an aluminum finished, surface-mounted, back flanged case with a stainless steel ring, and a clear glass window. The movement shall be rotary; the bourdon tube shall be bronze with a lead-free brass socket. The gauge shall have a 1/4" MNPT lower mount process connection. Combination pressure gauge range and scale graduations shall be in psi and feet of water as follows:

Gauge ranges shall be established by the Engineer for each of the suction and discharge gauges for each pump station.

All gauges will be panel-mounted off the pipeline and be connected to their respective sensing point. The gauge trim tubing shall be complete with both isolating and vent valves and the tubing shall be so arranged as to easily vent air and facilitate gauge removal. Gauges mounted directly to the pipeline or at the sensing point will not be accepted.

Gauge ranges, markings and gauge location shall be identified in the submittal documents.

STATIC AND SENSING LINES

All gauge, switch and transmitter sensing lines shall be a minimum 1/4” OD white polypropylene tubing run from the sensing point and a ball valve to the point of device mounting.

The pilot tubing shall be run in a workmanlike manner with elastomeric/stainless steel mounting straps to securely hold the tubing free of stress and vibration. The alignment and organization of the sensing lines shall continuously rise.

SAMPLE TAP

A single, right-angle outlet, smooth nose, brass sample tap shall be affixed to the manual vent ball valve for the low suction lockout and suction pressure gauge assembly.

HOSE BIBB WITH VACUUM BREAKER

There shall be provided a standard hose bibb with valve and vacuum breaker on the suction piping. The hose bibb connection shall be through a pressure regulator if the header pressure would exceed 60 psi.

BALL VALVES

The ball valves will be 2-piece, full-port design with blow-out proof stem. The seats, packing and seal shall be PTFE. Ball valves shall be provided with an adjustable stem packing nut. The body and retainer shall be lead-free brass (DZR). The ball shall be lead-free brass (DZR), chrome-plated for sizes ¼”-1” and 316SS for sizes 1-1/4”-4”. The handle shall have a distinctive white “lead-free” handle grip and blue “lead-free” hanging tag. The valves will be NPTxNPT threaded pattern. Maximum working pressure shall be 600 psi up to 2” and 400 PSI for sizes 2-1/2” to 4”.

BUTTERFLY VALVES

Valve body shall be one-piece wafer or lug design with extended neck to allow for 2" of piping insulation. Flange locating holes shall be provided on wafer bodies to allow for

quick and precise alignment during valve installation. Flange hole drilling per international flange standard as specified. A non-corrosive bushing and a self-adjusting stem seal shall be provided. No field adjustment shall be necessary to maintain optimum field performance.

The disc edge and hub on metal discs shall be spherically machined and hand-polished for torque and maximum sealing capability. Disc shall be Nylon 11-coated ductile iron.

The stem shall be a one-piece design. Disc-to-stem connection shall be an internal double "D" design with no possible leak paths in the disc-to-stem connection. External disc-to-stem connections, such as discscrews or pins, are not allowed. The stem shall be mechanically retained in the body neck and no part of the stem shall be exposed to the line media.

The seat shall be a tongue-and-groove seat with a primary hub seal and a molded flange O-ring for weld-neck and slip-on flanges. The seat shall totally encapsulate the body, isolating it from the line media, and no flange gaskets shall be required.

The valve shall be rated for bubble-tight shut-off at pressures of 175 PSI for 2"-12" and 150 PSI for 14"-20".

Valve manufacturer:

A. Bray Series 30/31
B. Keystone 221/222

MANUAL VALVE ACTUATORS

Manually operated butterfly valves size 6” and smaller shall be equipped with lever-style operators capable of withstanding 450 ft. lbs. of input torque and mounted to the valve trunnion with 4 bolts.

Manually operated butterfly valves size 8” and larger shall be equipped with travelling nut style handwheel operators capable of withstanding 450 ft. lbs. of input torque and mounted to the valve trunnion with 4 bolts.

GATE VALVES

Gate Valves shall conform to the latest version of AWWA Standard C-515 covering Resilient Seated Gate Valves for Water Supply Service.

The valves shall be 150# flanged with a ductile iron body and bonnet. The wedge shall be totally encapsulated with rubber. The sealing rubber shall be permanently bonded to the wedge to meet ASTM tests for rubber-metal bond ASTM D249. Working pressure for valve sizes 2”-12” shall be 250 PSI.

Valves shall be supplied with O-ring seals at all joints. No flat gaskets shall be allowed.

The valves shall be non-rising, opening by turning left to right. The handwheel shall

have the "Open" and an arrow cast in the metal to indicate the direction to open.

Stems for NRS assemblies shall be cast bronze with integral collars in full compliance with AWWA. The stem shall operate with bronze stem nuts, independent of the stem. The stem shall have (2) O-Rings located above the thrust collar and (1) O-Ring below. O-rings shall be replaceable with the valve fully opened and subjected to full pressure. Stems shall also have (2) low-torque thrust bearings located above and below the stem collar to reduce friction during operation.

Waterway shall be smooth, unobstructed and free of all pockets, cavities and depressions in the seat area.

The body, bonnet and stuffing plate shall be coated with fusion-bonded epoxy, both interior and exterior on the body and bonnet. Epoxy shall be applied in accordance with AWWA C550 and be NSF61 and NSF372 certified.

Each valve shall have a maker's name, pressure rating, and year in which it was manufactured cast in the body. Prior to shipment from the factory, each valve shall be tested by hydrostatic pressure equal to the requirements of AWWA.

Valves shall have all brass components cast and assembled in the USA.

Valve manufacturer:

A. Kennedy Valve
B. M&H
C. Clow

HYDRAULIC ACTUATED CONTROL VALVES

The valve configuration as shown shall be hydraulically operated, single diaphragm actuated. The valve shall consist of three major components: the body with the seat installed, the cover with the bearing installed, and the diaphragm assembly. The diaphragm assembly shall be the only moving part and shall form a sealed chamber in the upper portion of the valve, separating operating pressure from line pressure. Packing glands and/or stuffing boxes are not permitted and there shall be no pistons operating the main valve or pilot controls. Valve body and cover shall be epoxy-coated. The stainless steel seat with integral bearing shall be of the solid, one-piece design.

The diaphragm assembly shall contain a non-magnetic stainless steel stem of sufficient diameter to withstand high hydraulic pressures. The stem shall be fully guided through its complete stroke by a removable bearing in the valve cover and an integral bearing in the valve seat. No center guides shall be permitted. The stem shall be drilled and tapped in the cover end to receive and affix such accessories as may be deemed necessary.

The flexible, non-wicking, FDA-approved diaphragm shall consist of nylon fabric bonded with synthetic rubber compatible with the operating fluid. The diaphragm shall be fully supported in the valve body and cover by machined surfaces that support no less than

one-half of the total surface area of the diaphragm in either the fully open or fully closed position.

The pilot control system shall include CK2 isolation valves and X46 flow clean strainer.

The pilot system shall include an opening and closing speed control on all valves.

Pilot-controlled sensing shall be upstream of the pilot system strainer so accurate control may be maintained if the strainer is partially blocked.

The Dual Solenoid hydraulic control valve pilot system shall consist of dual solenoids which alternately apply or relieve pressure to the diaphragm chamber to position the main valve. They shall be normally closed (energized to open), 120 or 240 volt AC, with NEMA type 4 enclosure. A manual system to bypass the solenoids shall also be provided.

The valve shall be equipped with a brass valve stem rod rising through a compression bushing in the top of the valve.

A valve position transmitter shall be installed on the main valve cover.

With the valve shall be included a VC-22D valve controller from the valve manufacturer.

The Control Valve shall be a Cla-Val Model 131G-01.

MAGNETIC FLOWMETER

Electromagnetic flow meters for permanent installations, both above and below ground. The meters shall utilize bipolar pulse DC coil excitation to measure the voltage induced by the flow of conductive liquid through a magnetic flux. The voltage shall be linearly proportional to flow velocity from 0.033 to 33 feet per second.

The sensor shall consist of a stainless steel flow tube with ANSI Class 150 B16.5 or AWWA C207 carbon steel or stainless steel flanges.

The sensor liner and electrode material shall be chosen to be compatible with the process fluid. All fluids require a minimum conductivity of 5µS/cm (20µS/cm for deionized water).

The sensor tube shall be lined with polyurethane, hard rubber, or PTFE, based upon the size of the flow meter and the process media conditions. NSF-61 shall be available as an option.

The sensor shall house two measuring electrodes, a grounding electrode, and one for physical empty pipe detection. The electrodes shall be bullet-nosed shaped and made of 316L SS or Alloy C22 (listed by the application and instrument schedule).

The sensor shall be rated for NEMA 4X service as standard; Optional NEMA6/IP67 for temporary immersion or NEMA6P/IP68 for permanent immersion.

The transmitter shall be a three-stage microprocessor controller mounted integrally. The transmitter shall incorporate a universal 100-240 VAC/18-30 VDC power supply. The transmitter housing will carry a NEMA 4X rating and shall be constructed to prevent moisture ingress, promote corrosion resistance, and be impervious to saline environments.

The transmitter display shall indicate simultaneous flow rate and total flow with 3 totalizers (forward, reverse and net total) and user-selectable engineering units and readout of diagnostic error messages.

The Transmitter output shall be specified as either 4-20mA HART; 0-20mA, pulse/frequency/switch; Modbus RS-485, Profibus DP, or EtherNet/IP

The transmitter shall support commissioning options through a device driver-less operation via an internal web server accessible through a standard RJ-45 Ethernet port or a WLAN (Wireless Local Area Network) connection as specified.

The transmitter shall include an onboard method to verify flow meter performance to the original manufacturer specifications without the use of external handhelds, interfaces, or special tooling.

The sensor shall house two measuring electrodes, a grounding electrode, and one for physical empty pipe detection. The electrodes shall be bullet-nosed shaped and made of 316L SS or Alloy C22. Straight run requirements are 5 diameters upstream and 2 diameters downstream to maintain laminar flow and full specified accuracy.

Sensor shall have an optional unrestricted mounting magnetic flowmeter sensor for applications without the typical inlet/outlet straight pipe run requirements. The full bore magnetic flowmeter in sizes 1”-12” shall maintain zero pressure loss while achieving 0.5% of rate accuracy.

The Inline Magnetic Flow Meter shall be an Endress+Hauser Promag W400

METER TEST PORT

The meter installation shall be complete with a meter test port as shown on the plans for this item. The test port shall consist of an NPT coupling in the pipe downstream of the meter capable of accommodating a threaded by hose connection adapter. The connection shall be plugged.

PRESSURE TESTING

When the station plumbing is completed, all piping (including valves, pumps, control valves, and fittings), which make up the entire system, shall be hydrostatically tested at a pressure of 150 psi or a pressure equal to the lowest test pressure rating of the equipment within the tested system, whichever is less. The test pressure shall be applied for a minimum of 20 minutes, during which time all joints, connections and seams shall be checked for leaking. Any deficiencies found shall be repaired and the test restarted.

The results of this testing shall be transmitted in writing to the Engineer prior to shipment of the station and shall note test pressure, time at full pressure and be signed by the Quality Control Manager or test technician.

ELECTRICAL DESIGN, ASSEMBLY & TEST

The electrical apparatus and control panel design, assembly, and installation, and the integration of component parts will be the responsibility of the manufacturer of record for this booster pumping equipment. That manufacturer shall maintain at its regular place of business a complete electrical design, assembly and test facility to assure continuity of electrical design with equipment application. Control panels designed, assembled or tested at other than the regular production facilities or by other than the regular production employees of the manufacturer of record for this booster pumping equipment will not be approved.

CONFORMANCE TO BASIC ELECTRICAL STANDARDS

The manufacturer of electrical control panels and their mounting and installation shall be done in strict accordance with the requirements of UL Standard 508A and the National Electrical Code (NEC), NFPA 70, latest revision, to afford a measure of security as to the ability of the eventual owner to safely operate the equipment.

No exceptions to the requirements of these codes and standards will be allowed; failure to meet these requirements will be cause for removal of the equipment and correction of the violation.

U.L. LISTING

All service entrance, power distribution, control and starting equipment panels shall be constructed and installed in strict accordance with Underwriter's Laboratories (cUL) Standard 508A "Industrial Control Equipment." The cUL label shall also include an SE "Service Entrance" rating stating that the main distribution panel is suitable for use as service entrance equipment. The panels shall be shop inspected by cUL, or constructed in a cUL-recognized facility. All panels shall bear a serialized cUL label indicating acceptance under Standard 508A and under Enclosed Industrial Control Panel or Service Equipment Panel.

E.T.L. LISTING

All control panels shall be E.T.L. Listed by Interek Testing Services (ITS) under the Industrial Control Panel (ICP) Category. Each completed control panel shall bear an ETL listing label stating that the panel conforms to UL STD 508A and is certified to CAN/CSA STD C22.2 NO. 14. The listing label shall include the station manufacturer's name, address and telephone number. The station manufacturer shall have quarterly inspections performed by ETL at the manufacturer's facility to ensure that the products being listed comply with the report and procedural guide for that product.

EQUIPMENT GROUNDING

Each electrical equipment item in the station shall be properly grounded per Section 250 of the National Electrical Code. Items to be grounded include, but are not limited to, pump motor frames, control panel, transformer, convenience receptacles, dedicated receptacle for heater, air conditioner, dehumidifier, lights, light switch, exhaust fans and pressure switches.

All ground wires from installed equipment shall be in conduit and shall lead back to the control panel to a copper ground buss specific for grounding purposes and so labeled. The ground buss shall be complete with a lug large enough to accept the installing electrician's bare copper earth ground wire. The bus shall serve as a bond between the earth ground and the equipment ground wires.

PANEL MOUNTING HARDWARE

Metal framing channel and hangers shall be used exclusively for mounting of electrical panels and electrical components, except for those specifically designated otherwise.

When mounting panels in buildings with ¾" plywood interior sheathing, certain panels and components may be mounted by screwing these devices into the wall. The maximum weight of a panel mounted with four lag screws cannot exceed 250#. The lag screws must either be 5/16" or 3/8" in diameter and be fully threaded.

ELECTRICAL SERVICE

The electrical service provided for this station will be 240 volt, 1-phase, 60 Hertz, 3-wire.

CIRCUIT BREAKER (LIGHTING) PANEL

The lighting panel shall be a single-section, bolt-on panelboard, top feed, surface mount, NEMA 1 enclosure for single phase, three wire, 240/120 VAC power and with aluminum bus. Circuit Breakers are rated for 10 KAIC.

There shall be provided, thermal-magnetic trip circuit breakers as follows:

One (1) Transformer Breaker, Secondary Side, 100 amps;
Auxiliary Circuit Breakers, as follows:

1. 1-pole, 15-amp Controls
2. 1-pole, 15-amp Telemetry
3. 1-pole, 15-amp Lights
4. 1-pole, 15-amp Convenience Outlets

5. 1-pole, 15-amp Sump Pump
6. 1-pole, 15-amp Dehumidifier
7. 2-pole, 30-amp Heater
8. 1-pole, 15-amp Exhaust Fan
9. 1-pole, 15-amp Spare
10. 1-pole, 15-amp Spare
11. 1-pole, 20-amp Spare
12. 1-pole, 20-amp Spare

TELEMETRY CONTROL INTERFACE PANEL

It will be the responsibility of the station manufacturer to provide the following as an adjunct to the supplied telemetry equipment.

1. 1" telemetry entrance conduit complete to telemetry panel.
2. Size 12" x 12" NEMA 1 telemetry interface panel.
3. Separate 120-volt single-phase power circuit in conduit to the telemetry interface panel.
4. Telemetry control circuits made up and in conduit from the main control panel to the telemetry interface panel terminal strip.
5. Metal framing channel to mount telemetry equipment.

ALARMS CONDITION AND OUTPUTS

The following alarms/status points shall be included within the booster pump station and wired back to the interface panel:

1. Water Within Station - The water alarm shall be a 120-volt AC circuit driven by a float switch, wall-mounted within the equipment capsule. The float switch shall be of the magnetic float type with the float moving up and down a guide tube. One-half (1/2) inch of float movement shall actuate the SPST reed type switch inside the guide tube. The switch shall be so mounted that when water reaches a point one (1) inch above the sump the float switch will activate the alarm.

2. Unauthorized entry alarms on hatches and doors - The unauthorized entry alarm shall be driven by a hatch-mounted limit switch. The limit switch shall be the adjustable arm, roller contactor type, which makes an internal SPST micro switch. The switch will be so mounted as to activate anytime the entrance manway hatch is opened.

3. Power status alarm – The phase fail alarm shall be provided by 120 volt AC relay.

4. High Station Temperature Alarm – The station high temperature alarm shall be provided by a thermostat in the station.

5. Low Temperature Alarm – The station low temperature alarm shall be provided by a thermostat in the station.

ELECTRICAL VOLTAGE MONITOR

A voltage monitor shall be supplied to protect equipment against undervoltage and overvoltage conditions.

When a fault is sensed, the monitor output relay opens within two seconds or less to turn the equipment off and/or cause an audio or visual alarm. The monitor shall have an automatic reset and shall also include an adjustable voltage delay.

The monitor shall have an indicator LED (glows when all conditions are normal. The voltage monitor shall be UL-approved and CSA-certified.

SURGE PROTECTION DEVICE

A secondary surge arrester shall be provided. Housing shall be Noryl and be ultrasonically sealed. Valve blocks shall be metal oxide with an insulating ceramic collar. Gap design shall be annular. The lead wire shall be permanently crimped to the upper electrode forming part of the gap structure.

Arresters shall be UL and CSA-listed Lightning Protective Devices.

ELECTRICAL CONDUIT AND WIRING

All service entrance conduits, power and signal, shall be rigid steel conduit, individually sized to accept the inbound service conductors and telemetry/telephone/radio cables.

These service entrance conduits shall be installed from the main power or control panel through the capsule steel sidewall and terminate exterior to the equipment enclosure as a thread hub. The exterior conduit connection points shall be capped or plugged for shipment.

All wiring within the equipment enclosure and outside of the panel enclosures shall be run in conduit except where watertight flexible conduit is properly used to connect pump motors, fan motors, transformers, solenoid valves, limit switches, etc., where flexible connections are best utilized.

Devices and appliances that where furnished by the original manufacturer and being equipped with a UL-approved rubber cord and plug may be plugged into a receptacle.

Equipment enclosure conduits shall be Schedule 40 PVC with solvent weld moisture-proof connections, in minimum size 3/4" or larger, sized to handle the type, number and size of equipment conductors to be carried.

The conduiting shall be in compliance with the National Electrical Code.

Where flexible conduit connections are necessary, the conduit used shall be Liquid-tight, flexible, totally nonmetallic, corrosion-resistant, nonconductive, U.L. listed conduit sized to handle the type, number and size of equipment conductors to be carried - in

compliance with the National Electrical Code.

Motor circuit conductors shall be sized for the load. All branch circuit conductors supplying a single motor of one (1) horsepower or more shall have an ampacity of not less than 125 percent of the motor full load current rating, dual rated type THHN/THWN.

Control and accessory wiring shall be sized for load, type MTW/AWM.

STATION INTERIOR LIGHTING

There shall be one or more forty-eight (48) inch minimum length LED light fixtures installed within the equipment enclosure, as shown on the plan for this item. The fixture shall be 120/277VAC, 6000 lumens minimum with a medium distribution lens, 4K color temp, and be UL Listed for a wet environment. The light switch shall be of the night glow type and be located conveniently adjacent to the door.

Open fixtures will not be accepted.

DEHUMIDIFIER

1. One (1) each, installed as shown.
2. Capacity 30 pints per 24 hours.
3. Compressor rated 115 volts, 60 Hz, 4.3 operating amps.
4. 106 CFM fan, 2-speed fan.
5. Humidity range 35 to 80% RH, ambient temperature range of 41 to 95°F, Type R410A refrigerant.
6. Washable filter.
7. Condensate piped directly to drain.
8. UL-listed rubber cord.

HEATER

1. One (1) each, wall-mounted as shown.
2. Rating - 13,648 BTU/HR – 4000/3000 watts, 240/208 volt, 16.8/14.4 amps.
3. Enclosed resistance wire within a steel finned element.
4. Control - thermostat.
5. ETL listed.
6. Fan forced.
7. Hard-wired in conduit per UL 400-1.

EXHAUST FAN

1. One (1) each, installed as shown.
2. Capacity each 230 cfm at .2 inch static pressure.
3. Shaded pole motor - squirrel cage blower.
4. Hard-wired in conduit to conduit box on motor per UL 400-1.

5. 120 volt A.C. operation from wall mount thermostat and HAND-OFF-AUTO switch on main control panel.
6. Hatch installed limit switch to activate the exhaust fan whenever the entrance hatch is open.
7. Exhaust air piping - **3** inch minimum.
8. Air return piping - **3** inch minimum.
9. Exhaust and return piping protected by a 180˚ PVC return bend with a removable insect screen.

SUMP PUMP

1. One (1) each, installed as shown.
2. Capacity 19 gpm at 15 feet TDH.
3. Vortex type Impeller - plastic, glass-filled with metal insert.
4. Cast iron motor shell, switch case and pump housing.
5. UL-listed submersible oil-filled motor - UL-listed rubber power cord - 120 volt AC operation.
6. Float-operated, submersible (NEMA 6) mechanical switch.
7. Completely submersible, hermetically sealed.
8. Auto reset thermal overload protection.
9. PVC pump discharge piping 1 1/2" x 1 1/4" with single check valve - union both sides.
10. Provision for dewatering drain system for freeze protection.

13210

Elevated Composite Water Storage Tanks

SECTION 13210
ELEVATED COMPOSITE WATER STORAGE TANKS

PART 1 - GENERAL

1.1 SUMMARY

A. This Section includes the following:

1. Design, fabrication, and site erection of elevated steel water storage tanks with concrete foundations for use with potable water.

2. Tanks are generally described as follows:

a. One 1,500,000 U.S. gallon net composite elevated tank. Steel tank shall be supported by a concrete pedestal.

B. Related sections include the following:

1. Section 00310 – Geotechnical Data for available information on below-grade conditions.

2. Division 2 of the Technical Specifications for related site work.

3. Section 02000 – Town of Chandler Standards for water distribution piping, fittings, valves, and appurtenances to be installed with the tanks.

4. Section 09960 – Tank Paint System for coating systems to be installed on tanks.

5. Section 11220 – Submersible Mixers for tank mixing systems to be installed in tanks.

6. Section 13130 – Factory-Built Control Valve Station for control valve and other associated appurtenances installed with tanks.

7. Division 16 of the Technical Specifications for related electrical and instrumentation and controls to be installed with tanks and control valves.

1.2 REFERENCES

A. ACI 318 – Building Code Requirements for Structural Concrete.

B. AWWA D107 – Welded Carbon Steel Tanks for Water Storage.

C. AWWA C652 – Disinfection of Water-Storage Facilities.

1.3 SYSTEM REQUIREMENTS

A. Design Requirements

1. Design tanks in accordance with AWWA D107, Section 3, Method 1 or Method 2, as they apply to elevated water storage tank(s) of the capacity, style and location of the specified tanks.

2. In the design, it is intended that the overflow level of the elevated tank be as shown on the plans. The foundation elevations and overall height of structure to overflow shall strictly adhere to dimensions shown. Minor variations in head range of the manufacturers' standard tank designs will be considered, but overall height of tank and tower must conform to plans.

3. Tank net volumes are measured from the top of the riser pipe to the overflow elevation.

4. Reinforced concrete design shall conform to ACI 318.

5. Earthquake Design – Requirements per Section 3.1.5 of AWWA D107-96. Seismic design based on the location of the tanks.

6. Snow Load – Requirements per Paragraph 3.1.3 of AWWA D107-96, 25 psf.

7. Wind Load – Requirements per Paragraph 3.1.4 of AWWA D107-96, 100 mph.

8. Corrosion Allowance

   a. In contact with water: one-eighth inch (1/8”).
   b. Not in contact with water: one-eighth inch (1/8”).

1.4 SUBMITTALS

A. Action Submittals

1. Product Data

B. Informational Submittals

1. Shop Drawings
    a. Tank and foundation, sealed by professional engineer registered in the State of Indiana.
2. Qualification Data
3. Installer Certificates
4. Manufacturer Certificates
5. Manufacturer Test Reports, including:
    a. Mill Test Reports
6. Schedule of Tests and Inspections
7. Field Test Reports, including
    a. Certified inspection and testing report per Section 11.2 of AWWA D107.
8. Design Data
    a. Tank and foundation, sealed by professional engineer registered in the State of Indiana.
    b. Section view drawing of the proposed tank.
    c. Details to illustrate tank geometry, materials of construction, primary dimensions, support wall thickness and pour height, concrete floor slab thickness, elevation of low and high-water levels.
    d. Coatings areas: interior wet, interior dry and exterior surfaces.
9. Manufacturers' Instructions
10. Manufacturers' Field Reports
11. Product Warranties

C. Project Record Documents

1. Shop Drawings

2. Factory test reports

3. Field test reports

4. Record Drawings

1.5 QUALITY ASSURANCE

A. Qualifications

1. Tank Manufacturer: Tank manufacturer shall regularly and presently manufacture the item submitted as one of their principal products, and shall have furnished and erected at least five of this style of composite elevated tank of equal or greater capacity. A letter shall accompany the bid listing five such tanks including the name of the owner, the capacity, location and year completed.

2. Tank Constructor: Tank constructor shall be tank manufacturer.

3. Welders: All welders shall be qualified according to AWWA D107-96 for all positions.

4. Testing Agencies: Independent geotechnical engineering, concrete testing, weld x-ray and radiographic testing agencies shall have minimum 5 years experience in same form of testing.

B. Regulatory Requirements

1. Tank design and construction shall meet all applicable regulations.

1.6 SCHEDULING

A. Place following systems in service prior to substantial completion or placement into service of tanks:

1. Altitude/flow control valve at Plank tank, and

2. Local control system at this new tank to regulate water level.

B. Place New Paradise Tank and controls into service prior to demolition of existing tanks (refer to Steel Tank Demolition Section 02222 for more information).

1.7 WARRANTIES

A. Manufacturer's Warranty

PART 2 - PRODUCTS

2.1 COMPOSITE ELEVATED TANK

A. Composite elevated tank configuration, design, analysis, dimensions and details shall comply with AWWA D107, this specification section and the project drawings.

B. Composite elevated tank shall consist of the following: foundation, reinforced concrete support structure, and a welded steel water tank.

C. Support structure shall extend vertically from the foundation as a circular concrete wall.

D. A reinforced concrete tank floor shall be provided as structural support for the steel tank within the perimeter of the support wall.

E. A reinforced concrete ringbeam shall be provided to connect the steel tank, concrete tank floor and concrete support wall.

F. Operating Parameters

Tank Capacity (net volume between TCL & BCL)	1,500,000	Gallon
Elevation - Overflow	592.00	Feet
Elevation - Top Capacity Level (TCL)	592.00	Feet
Elevation - Bottom Capacity Level (BCL)	557.00	Feet
Maximum Head Range (TCL - BCL)	35.00	Feet
Maximum Inlet Fill Rate	1,000	GPM
Maximum Outlet Rate	1,000	GPM

G. Tank Configuration

Support Wall Diameter (+/- 2 feet)	48.00	Feet
Steel Tank Diameter	86.00	Feet

Pipe Diameter - Inlet	16	Inch
Pipe Diameter - Outlet	16	Inch
Pipe Diameter - Overflow	12	Inch

H. Site Parameters – see plan sheets.

2.2 STEEL PLATES

A. Plate Edge Preparation – The welding edges of plates may be prepared by shearing, machining, gas-cutting or chipping. When edges of plates are gas cut, the resulting surface must be uniform and smooth and must be freed of slag accumulations before welding. All cutting shall follow closely the lines prescribed. Shearing of material for butt joints shall be limited to a thickness of ½ inch or less. Material for all permitted thicknesses of lap joints may be sheared.

B. Double Curved Plates – Plates which are curved in two directions may be pressed either cold or hot or may be dished with a "mortar and pestle" die by repeated operations.

2.3 RISER PIPES

A. Riser pipes shall be 10-gauge 304L stainless steel, or an approved alternative, of the diameter specified.

B. Riser pipe shall be supported in its vertical rise at a maximum of 12 feet intervals.

C. The riser pipe shall be supported on the bottom by a flanged ductile iron base bend set on a reinforced concrete pad. Bend shall also be thrust-blocked. The riser pipe shall have an expansion joint above the base bend.

D. Riser pipe shall extend above bottom of the tank to form a silt stop. Provide protection from falls into riser pipe in accordance with regulatory requirements. Provide removable baffle or other distributor over riser pipe.

2.4 OVERFLOW PIPES

A. Provide a 10-gauge 304L stainless steel overflow pipe, or an approved alternative, equipped with a weir box or other anti-vortex inlet device.

B. The overflow pipe shall extend down the inside of the column/pedestal and discharge outside the pedestal base.

C. Discharge location shall be about two feet above grade level onto a splash block or other drainage structure specified.

D. Overflow pipe termination shall be one of the following:

1. Twenty-four (24) mesh insect screen with 8 x 8 mesh stainless steel protective screen. Vent shall be easily dismantled to remove the screens for cleaning or replacement. Provide stainless steel or silicon-bronze material for fasteners.

2. If horizontal, manufactured light-duty DI or CI drainage flap valve with inclined seating surface.

E. Overflows shall be sized as specified.

2.5 SHOP PAINTING

A. Provide a shop primer coat on all steel.

2.6 ACCESSORIES

A. Safety Devices: Provide safety devices, fall prevention devices, safety cages, handrails, intermediate platforms, lighting, and other safety systems in accordance with state and federal regulations.

B. FAA Hazard Warning Lights: Provide FAA-approved aviation hazard lighting on top of tank.

C. Roof Vent

1. Provide one mushroom vent of adequate size to handle pressure differential caused by water entering or leaving the tank at a maximum rate.

2. Vent shall be welded to the tank with continuous fillet welds on the

3. Open area of the overflow shall not be considered as venting area.

4. Vent shall have twenty-four (24) mesh stainless steel insect screens and shall be designed to relieve any pressure or vacuum in the event the screen exterior and interior surfaces frost over or is otherwise clogged.

5. Vent shall be easily dismantled to remove the screens for cleaning or replacement. Provide stainless steel or silicon-bronze material for fasteners.

D. Roof Hatches

1. Provide roof hatch on top of access tube.

2. Provide one 30-inch diameter roof hatch for access to tank.

3. Provide one 30-inch roof hatch about 180 degrees from the access hatch so that an exhaust fan may be bolted to the hatch for ventilation during painting.

4. Hatches shall be locking, hinged, and rain-proof with opening chain to prevent hatch from hitting tank.

5. Hatch openings shall have a curb four inches high, and the cover shall have a downward overlap of two inches.

6. Hatch over access tube shall be lockable from inside with a handle.

7. Hatches accessing the tank shall be lockable from outside with a hasp and padlock.

8. Hinges shall be tamper-resistant design and allow the hatch to open a minimum of 135 degrees

E. Water-Tight Manholes

1. Provide roof hatch on top of access tube. Water-tight shell and access tube manholes shall have gasketed cover designed to be opened to the inside of the tank.

2. Manholes shall be arranged to be clamped to the opening from the dry side.

F. Welds attaching components shall be seal welded.

G. Provide underground electrical service, including conduit, panel board, and wiring for tank accessory power in accordance with National Electrical Code and local codes. Mount panel board on 3/16" minimum thick vertical steel mounting plate welded in base or on tank leg.

H. Padlocks: Provide padlocks for all hatches keyed to match Owner's keys.

~~I. Antenna Bracket: Provide an antenna bracket support on the top of the tank near the access tube roof hatch suitably designed for commercial antenna brackets.~~

J. Provide door with flush threshold located in the base of the pedestal. Door shall be complete with a handle, drip cover, and dead bolt lock with hasp. The door shall be fabricated from steel plate with adequate stiffening and specifically designed for use with the tank. The door is to be minimum 36" wide by 84" high 1 ¾-inch thick 18-gauge hollow metal designed for exterior use.

K. One access tube, minimum 60" in diameter, centrally located through the steel tank to provide access to the tank roof from the upper walkway platform. Provide a 2" x 2" channel to collect condensation. A flexible ¾" PVC hose complete with backflow preventer shall drain the channel to the overflow pipe. One water-tight access tube manhole for the tank interior shall be provided at the base of this tube. The manhole shall be 18" x 24" for a 36" access tube.

L. Painter's hatch shall be provided on the roof for access to the tank exterior.

M. Exterior painter's ring shall be installed near the top of the column/pedestal.

N. Roof hatch shall be at the top of the access tube or ladder. The other shall be adjacent to the access tube for entry into the tank and shall have a handle and hasp.

O. Fixed ladders shall be provided:

1. in pedestal base,

2. in pedestal,

3. inside access tube, and

4. on access tube inside tank.

P. Platforms

1. Provide steel condensate platform at the junction of the pedestal shaft and base cone.

2. Provide steel condensate platform in pedestal or cone about seven feet (7′) below the bottom of the tank.

3. The platforms shall be pitched to drain and fitted with sufficient curbs and covers to keep condensate from entering the base of the tank.

4. Platforms shall be drained with steel drain pipe inside column to exterior gravel sump. Drain pipe shall be two inch (2″) schedule 40 welded steel pipe.

Q. Overhead vehicle door Platforms

1. Installation shall be on the interior face of the support wall.

2. The door frame shall be galvanized steel. Provide Steel curtain guides shall be attached to the door frame.

3. Operation shall be manual with a chain hoist. Torsion springs shall be mounted on a solid torsion rod, which is attached to an exterior mounted spring tension adjustment wheel.

4. The curtain shall be formed of 22-gauge steel interlocking slats with end locks and wind locks designed for a wind loading of 20 psf.

5. A 24-gauge steel hood shall be provided with a weather seal.

6. Steel brackets shall be installed to the interior face of the wall which enclose and support the counterbalance assembly with sealed bearings.

7. The curtain, bottom bar, brackets, guides, hood, pipe and chain shall be galvanized.

8. Provide with locking device.

9. Size, quantity and location of vehicle door(s) shall be as shown on the drawings.

10. Bollards shall be installed as shown on the drawings

R. Electrical

1. Lights

a. Four 150W incandescent lights in vapor-proof caged fixtures shall be installed in the base cone of the column/pedestal, controlled by a single weatherproof switch mounted near the access door into the base.

b. Single lights of the same type shall be installed at about 8 feet above each platform and at the top of the access tube. These lights shall be controlled by a second weatherproof switch mounted at the first platform level.

2. Receptacles

a. Provide GFI covered, weatherproof 110V duplex receptacles:
   1) at the base,
   2) at each platform level, and
   3) at the top of the access tube.

3. Conduits

a. Interior conduits shall not obstruct ladder.

b. Provide conduits through ring wall necessary for indicated power service.

Provide two spare three inch (3") galvanized steel rigid conduit sleeves through ring wall at two feet (2') below grade near electrical service entrance for future use. Conduit shall extend minimum six inches (6") above the inside floor and about 6 inches (6") outside the ring wall, and be capped on both ends.

PART 3 - EXECUTION

3.1 EXAMINATION

A. Require testing agency to inspect and test soils at locations of footings. Proceed with subsequent work only after test results indicate soil bearing capacity meets or exceeds footing design requirements.

B. When testing agency reports that soils do not achieved degree of bearing capacity specified, redesign footers to comply with specified bearing capacity.

3.2 INSTALLATION

A. Foundation

1. Foundations shall be constructed of concrete with the necessary anchor bolts. Minimum allowable compressive strength (28 day) shall be not less than 3000 psi.

2. Excavations shall be free of all loose material and vegetable matter. Last 2" of excavation material shall be removed by hand with shovels.

3. The foundations shall include valve and access vaults where detailed. Provide keyed, boxed-out holes in the walls at the proper location for insertion of outlet pipe, drains, and conduits.

B. Welding

1. The field welding of tank and tower shall be done by the shielded arc process. Plates and component members shall be assembled and welded following a procedure which will result in a minimum of distortion from weld shrinkage.

2. Provide the services of a welding supervisor independent of the tank erection foreman's jurisdiction.

3. All welded joints on the tank interior including the underside of roof lap joints and structural framing shall be seal welded.

4. All butt joints shall have complete joint penetration welds.

C. Preparation of Welding Surfaces

1. Surfaces to be welded shall be free from loose scale, slag, heavy rust, grease, paint and any other foreign material excepting tightly adherent mill scale but a thin coat of linseed oil if present need not be removed.

2. Joint surfaces shall be smooth, uniform, and free from fins, tears and other defects which adversely affect proper welding.

3. A fine film of rust, adhering after wire brushing on cut or sheared edges that are to be welded, need not be removed.

D. Preheating and Interpass Temperature

1. When the thickness of materials to be welded exceed 1½ inches, the surfaces within a minimum distance of four times the thickness from the edges where welding is to be started shall be heated to a temperature of 200 degree F., and at least this temperature shall be maintained for four thicknesses each side of the arc as welding progresses.

E. Alignment of Plates

1. Welded members and their component parts will be straight and free from excessive buckles or warping.

2. Misalignment of adjoining plates for butt joints subject to primary stress from weight or pressure of tank shall not exceed ten percent of the thinner plate thickness or 1/16 inch, whichever is greater, and for butt joints subject to secondary stress such misalignment shall not exceed 20 percent of the thinner plate thickness or 1/8 inch, whichever is greater.

3. At all lap joints, the plates shall be held in close contact during the welding operation. The separation shall be not more than 1/16 inch. The size of the fillet shall be increased by the amount of the separation.

F. Grouting Column and Riser Bases

1. After the tank has been completely erected and trued up, thoroughly wet the space existing between column and riser bases and foundations and fill with a 1:1 cement-sand grout forced under the base plates and filling the space completely.

2. After tank is erected and painted, apply a minimum 3/4" bead of epoxy rubber caulking in joint between ring walls (or piers) and steel base plate. Material shall be a polysulfide such as "Thiotok" by Toch Brothers or equal.

3.3 FIELD QUALITY CONTROL

A. Conduct mill or shop inspection. Provide weld plug specimens as set out in specifications.

B. Plumbness - Erected tank must be vertically plumb within plus or minus one inch per 100 feet in height. Provide means for plumbness verification.

C. Contractor to have at least two sets of test cylinders of concrete utilized on site tested by independent testing lab at his cost. Provide results to Engineer.

D. Weld X-Rays - Test vertical, horizontal and tee welds as required by ASTM and AWWA Standards.

E. Radiographic Testing - Radiographic testing of welded joints shall be conducted in accordance with AWWA D107-96, Section 11.5. The greater of 5 vertical, 5 horizontal and two tee welded joints or the number tests required by section 11.5, whichever is greater, shall be tested.

3.4 TESTING AND STERILIZATION

A. General

1. After the tank is completed and painted, Owner shall provide free of charge, potable water for testing and sterilization. Following final coat application, the tank shall not be filled or disinfected until the coating system is fully cured.

B. Chlorination

1. Chlorinate the tank in accordance with AWWA C652 Method 2 prior to the tank being filled. The chlorine solution concentration shall be at least 2 ppm when tank is filled.

2. Chlorinating chemicals shall meet AWWA or NSF requirements for use in potable water.

3. Allow the chlorinated water to remain in the tank for 24-hours.

4. Owner shall provide bacteriological sampling and testing.

5. The tank shall not be placed in service until satisfactory bacteriological tests have been obtained.

C. Leak Testing

1. Any leaks which are disclosed by filling the tank shall be repaired by gouging out defective areas and rewelding.

2. No repair work shall be done on any joint unless the water in the tank is at least two feet below the point being repaired.

3. Any paint damaged by repairs shall be properly restored.

3.5 STARTUP

A. Coordinate startup of tank with Owner.

B. Do not place tank in service prior to startup:

1. of related altitude and flow control valves at this new Paradise tank and Plank tank,

2. of related instrumentation and controls.

C. Following acceptance disinfection, tank contents shall be blended with other potable water and held until chlorine concentration is acceptable, or other Owner-approved method of disposal.

END OF SECTION 13210

DIVISION 15

MECHANICAL

DIVISION 15000 – MECHANICAL INDEX

15010	General Mechanical Requirements
15040	Common Work Results for Mechanical
15075	Hangers and Supports for Mechanical Piping and Equipment
15900	Instrumentation and Controls for HVAC
15950	Testing, Adjusting, and Balancing for HVAC

SECTION 15010 - GENERAL MECHANICAL REQUIREMENTS

PART 1 - GENERAL

1.1 RELATED DOCUMENTS

A. Drawings and general provisions of Contract, including General and Supplementary Conditions Specification sections, apply to work of this section.

1.2 SUMMARY

A. This Section specifies the basic requirements for mechanical installations and includes requirements common to more than one section of Division 15. It expands and supplements the requirements specified in sections of Division 1.

1.3 CODES AND STANDARDS

A. All work shall be done in accordance with all State, County and City Building Regulations and Codes.

B. All equipment and work under this Section shall also conform to the following regulations, codes, and standards.

1. OSHA
2. NFPA
3. SMACNA Standards for Sheet Metal Work
4. Indiana Mechanical Code
5. Indiana Plumbing Code
6. Model Energy Code, ASHRAE Standard 90.1 (Latest)

C. These regulations are considered a part of the specifications and shall prevail should they differ with plans and specifications. Prior to bid submission, the Contractors should direct the Engineer's attention to the difference. Should the Contractor not so notify the Engineer, the Contractor shall fully comply without claim for extra costs.

1.4 DRAWINGS

A. Drawings: Because of the small scale of the drawings, it is not possible to indicate all offsets, fittings, and accessories that may be required. The Contractor shall carefully investigate the plumbing, fire protection, electrical, structural and finish conditions that would affect the work to be performed and shall arrange such work accordingly, furnishing required ductwork offsets, fittings, and accessories to meet such conditions.

B. Design Concepts: The Drawings indicate capacities, sizes, and dimensional requirements of system components and are based on the specific types, manufacturers, and models indicated. Components having equal performance characteristics by other manufacturers may be considered provided that deviations in dimensions, operation, and other characteristics are minor and do not change the design concept or intended performance as judged by the Engineer. The burden of proof of equality of products is on the proposer. Refer to Division 1 Section "Product Substitutions."

1.5 MUTUAL COOPERATION OF SEPARATE SUB-CONTRACTORS

A. It shall be the responsibility of each separate Sub-contractor to notify any and all separate Contractors at the proper time for the installation of the other Contractors' work, where the operations of such Contractor would "cover-up" or render the installation of the work of the other Contractor impossible: such notice to be given in writing in the event that it is found necessary to proceed prior to the installation of the work by the other Contractor.

1.6 ASSIGNMENT OF MISCELLANEOUS WORK

A. Openings in walls and floors required for this section of work shall be by the Contractor installing the work, unless specifically noted otherwise on the plans. Each Contractor or his Subcontractor will be responsible for exact locations, of piping and ductwork. If work is completed without proper notification of locations by each Contractor, all cost of cutting and patching must be paid by the Contractor in fault.

B. Roof Openings are to be cut by the Contractor for HVAC related items, and plumbing related items. All curbs and flashings are to be furnished, set, and anchored by the responsible Contractor in cooperation with the General Contractor. On projects involving new roofs, the General Contractor shall strip-in the curbs to be watertight. The responsible mechanical contractor shall seal penetrations on existing roofs. If an existing roof is under warranty, the responsible mechanical contractor shall provide assurances that his work shall not compromise the roof warranty.

C. Painting. Each Contractor will provide prime painting on all ferrous metals such as supporting steel. Wall repairs for sleeve installation, etc. shall be painted to match existing.

D. Pads, Foundations and Concrete Trenches for equipment or drainage shown on the architectural or structural plans shall be by the General Contractor. All others shall be constructed by the Mechanical Contractor. Any change from sizes shown on the plans due to substitution, etc., must be verified with the General Contractor. All imbedded anchors, sleeves, or hangers must be provided by Mechanical Contractor.

E. Platforms and Supporting Stands for equipment shall be furnished by each responsible Contractor unless noted otherwise.

F. Excavation and Backfill for all work in this Section shall be done by this Contractor in accordance with the Specification of Division 31 covering this type of work. Any cutting of existing surface such as floor or pavement, and backfilling of trenches shall be done by this Contractor with material of same quality and thickness as the existing. Mechanical Contractor shall be responsible for trenches and voids associated with mechanical construction. The architectural plans shall indicate the extent of the patching assigned to the General Contractor. All other patching shall be by the responsible mechanical contractor.

G. Electrical power and control wiring will be done by the Electrical Contractor under Section 16, except temperature control wiring which shall be provided by Mechanical Contractor. Each Contractor will furnish all required wiring diagrams and manufacturer's data required to perform this work. The Electrical Contractor will provide all disconnects, unless they are furnished with the equipment by the equipment manufacturer. Each Contractor to provide all controls (temperature, pressure level, etc.) and install same if attached or inserted into pipe or duct systems.

1.7 MECHANICAL/ELECTRICAL COORDINATION

A. The mechanical contractor and each vendor of mechanical equipment shall review the equipment schedules and wiring diagrams shown on the plans for accuracy and completeness prior to submitting base bid. The mechanical contractor and his vendors shall inform the engineer of any discrepancies prior to submission of bids. Failure to so inform the engineer shall be an acceptance on the part of the mechanical contractor and vendors of any liability for errors or omissions concerning mechanical and electrical coordination.

1.8 ACCESSIBILITY

A. Install equipment and materials to provide required access for servicing and maintenance. Coordinate the final location of concealed equipment and devices requiring access with final location of required access panels and doors. Allow ample space for removal of all parts that require replacement or servicing.

B. Unless specifically noted otherwise, ceiling and wall access panels shall be provided by the mechanical contractor.
C. Extend all grease fittings to an accessible location.

PART 2 - PRODUCTS (NOT USED)

PART 3 - EXECUTION

3.1 ROUGH-IN

A. Verify final locations for rough-ins with field measurements and with the requirements of the actual equipment to be connected. This shall include rough-in of ductwork.

3.2 MECHANICAL INSTALLATIONS

A. Coordinate mechanical equipment and materials installation with other building components.
B. Verify all dimensions by field measurements.
C. Arrange for chases, slots, and openings in other building components to allow for mechanical installations.
D. Coordinate the installation of required supporting devices and sleeves to be set in poured in place concrete and other structural components, as they are constructed.
E. Sequence, coordinate, and integrate installations of mechanical materials and equipment for efficient flow of the Work. Give particular attention to large equipment requiring positioning prior to closing-in the building.
F. Coordinate the cutting and patching of building components to accommodate the installation of mechanical equipment and materials.
G. Where mounting heights are not detailed or dimensioned, install mechanical services and overhead equipment to provide the maximum headroom possible.
H. Install mechanical equipment to facilitate maintenance and repair or replacement of equipment components. As much as practical, connect equipment for ease of disconnecting, with minimum of interference with other installations.
I. Coordinate the installation of mechanical materials and equipment above ceilings with suspension system, light fixtures, and other installations.
J. Coordinate connection of mechanical systems with exterior underground and overhead utilities and services. Comply with requirements of governing regulations, franchised service companies, and controlling agencies. Provide required connection for each service.

3.3 CUTTING AND PATCHING

A. This Article specifies the cutting and patching of mechanical equipment, components, and materials to include removal and legal disposal of selected materials, components, and equipment.
B. Refer to Division 16 for requirements for cutting and patching electrical equipment, components, and materials.
C. Do not endanger or damage installed Work through procedures and processes of cutting and patching.
D. Arrange for repairs required to restore other work, because of damage caused as a result of mechanical installations.
E. No additional compensation will be authorized for cutting and patching Work that is necessitated by ill-timed, defective, or non-conforming installations.
F. Perform cutting, fitting, and patching of mechanical equipment and materials required to:

1. Uncover Work to provide for installation of ill-timed Work;
2. Remove and replace defective work;
3. Remove and replace Work not conforming to requirements of the Contract Documents;
4. Remove samples of installed Work as specified for testing;
5. Install equipment and materials in existing structures;
6. Upon written instructions from the Engineer, uncover and restore Work to provide for Engineer observation of concealed Work.

G. Protect the structure, furnishings, finishes, and adjacent materials not indicated or scheduled to be removed.

3.4 MECHANICAL SUBMITTALS

A. Refer to the Conditions of the Contract (General and Supplementary) and Division 1 "Submittal Procedures" for submittal definitions, requirements, and procedures.

B. Submittal of shop drawings, product data, and samples will be accepted only when submitted by The Contractor. Data submitted from subcontractors and material suppliers directly to the Engineer will not be processed.

3.5 PRODUCT OPTIONS AND SUBSTITUTIONS

A. Refer to the Instructions to Bidders and the Division 1 for requirements in selecting products and requesting substitutions.

3.6 PRODUCT LISTING

A. When two or more items of same material or equipment are required (pumps, valves, etc.) they shall be of the same manufacturer. Product manufacturer uniformity does not apply to raw materials, bulk materials, pipe, tube, fittings (except flanged and grooved types), sheet metal, wire, steel bar stock, welding rods, solder, fasteners, motors for dissimilar equipment units, and similar items used in Work, except as otherwise indicated.

B. Provide products which are compatible within systems and other connected items.

3.7 NAMEPLATE DATA

A. Provide permanent operational data nameplate on each item of power operated mechanical equipment, indicating manufacturer, product name, model number, serial number, capacity, operating and power characteristics, labels of tested compliances, and similar essential data. Locate nameplates in an accessible location.

3.8 DELIVERY, STORAGE, AND HANDLING

A. Deliver products to project properly identified with names, model numbers, types, grades, compliance labels, and similar information needed for distinct identifications; adequately packaged and protected to prevent damage during shipment, storage, and handling.

B. Coordinate deliveries of mechanical materials and equipment to minimize construction site congestion. Limit each shipment of materials and equipment to the items and quantities needed for the smooth and efficient flow of installations.

3.9 RECORD DOCUMENTS

A. Mark Drawings to indicate revisions to piping and ductwork, size and location both exterior and interior; including locations of coils, dampers and other control devices, filters, boxes, and similar units requiring periodic maintenance or repair; actual equipment locations, dimensioned

for column lines; actual inverts and locations of underground piping; concealed equipment, dimensioned to column lines; mains and branches of piping systems, with valves and control devices located and numbered, concealed unions located, and with items requiring maintenance located (i.e., traps, strainers, expansion compensators, tanks, etc.); Change Orders; concealed control system devices.

B. Mark Specifications to indicate approved substitutions; Change Orders; actual equipment and materials used.

3.10 OPERATION AND MAINTENANCE DATA

A. In addition to the information required by Division 1 for Maintenance Data, include the following information:

1. Description of function, normal operating characteristics and limitations, performance curves, engineering data and tests, and complete nomenclature and commercial numbers of all replaceable parts.
2. Manufacturer's printed operating procedures to include start-up, break-in, routine and normal operating instructions; regulation, control, stopping, shut-down, and emergency instructions; and summer and winter operating instructions.
3. Maintenance procedures for routine preventative maintenance and troubleshooting; disassembly, repair, and reassembly; aligning and adjusting instructions.
4. Servicing instructions and lubrication charts and schedules.

3.11 WARRANTIES

A. Unless specifically noted otherwise, warranties shall be as specified in Contract General Conditions.

B. Compile and assemble the warranties specified in Division 15, into a separated set of vinyl covered, three ring binders, tabulated and indexed for easy reference.

C. Provide complete warranty information for each item to include product or equipment to include date of beginning of warranty or bond; duration of warranty or bond; and names, addresses, and telephone numbers and procedures for filing a claim and obtaining warranty services.

3.12 CLEANING

A. Refer to Division 15 Section “Testing, Adjusting, and Balancing” for requirements for cleaning filters, strainers, and mechanical systems prior to final acceptance.

3.13 FACTORY START-UPS

A. Some major items of equipment shall be started up by or with the direct supervision of a technician commonly engaged in such work who is employed by the manufacturer, factory-authorized in writing or whose credentials are approved in writing by the Engineer. These items shall include as a minimum:

1. Temperature Control System
2. Roof-Top units

B. Engineer shall be notified one week in advance of the date and time of the start-ups.

C. Submit a complete start-up report to Owner/Engineer within two weeks of start-up and at least two weeks prior to final review.

D. When specified in individual specification sections manufacturer shall be required to provide an authorized representative to be present at site to inspect, check and approve equipment or

system installation prior to start-up and to supervise placing equipment or system in operation.

3.14 CONTRACTOR START-UPS

A. The Contractor may perform start-up work not specified in Paragraph 3.14. The Engineer shall be notified at least three working days in advance of the start-up of each system.

B. Before starting or operating equipment or systems certify to the Engineer that all systems have been properly flushed, cleaned and tested. Verify that each piece of equipment or system has been checked for proper lubrication, drive rotation, belt tension, control sequence or other conditions which may cause damage. Verify that tests, meter readings and specified electrical characteristics agree with those required by the equipment or system manufacturer and that all manufacturer's check lists and instructions have been followed. Verify wiring and support components for equipment are complete and tested.

C. Execute start-up under supervision of responsible Contractor's personnel in accordance with manufacturer's instructions. Satisfy requirements of this section and other individual specification sections for procedures.

END OF SECTION

SECTION 15040 - COMMON WORK RESULTS FOR MECHANICAL

PART 1– GENERAL

1.1 RELATED DOCUMENTS

A. Drawings and general provisions of the Contract, including General and Supplementary Conditions and Division 1 Specification Sections, apply to this Section.

1.2 SUMMARY

A. This Section includes the following basic mechanical materials and methods to complement other Division 15 Sections.
   1. Concrete base construction requirements.
   2. Escutcheons.
   3. Motors.
   4. Equipment nameplate data requirements.
   5. Labeling and identifying mechanical systems and equipment
   6. Nonshrink grout for equipment installations.
   7. Field-fabricated metal and wood equipment supports.
   8. Installation requirements common to equipment specification sections.
   9. Cutting and patching.
   10. Touchup painting and finishing.

1.3 DEFINITIONS

A. Finished Spaces: Spaces other than mechanical and electrical equipment rooms, furred spaces, pipe and duct shafts, unheated spaces immediately below roof, spaces above ceilings, unexcavated spaces, crawl spaces, and tunnels.

B. Exposed, Interior Installations: Exposed to view indoors. Examples include finished occupied spaces and mechanical equipment rooms.

C. Exposed, Exterior Installations: Exposed to view outdoors, or subject to outdoor ambient temperatures and weather conditions. Examples include rooftop locations.

D. Concealed, Interior Installations: Concealed from view and protected from physical contact by building occupants. Examples include above ceilings and in duct shafts.

E. Concealed, Exterior Installations: Concealed from view and protected from weather conditions and physical contact by building occupants, but subject to outdoor ambient temperatures. Examples include installations within unheated shelters.

F. The following are industry abbreviations for plastic materials:
   1. ABS: Acrylonitrile-butadiene-styrene plastic.
   2. CPVC: Chlorinated polyvinyl chloride plastic.
   3. NP: Nylon plastic.
   4. PE: Polyethylene plastic.
   5. PVC: Polyvinyl chloride plastic.

G. The following are industry abbreviations for rubber materials:

   1. CR: Chlorosulfonated polyethylene synthetic rubber.

2. EPDM: Ethylene propylene diene terpolymer rubber.

1.4 SUBMITTALS

A. Product Data: For dielectric fittings, flexible connectors, mechanical sleeve seals, and identification materials and devices.

B. Shop Drawings: Detail fabrication and installation for metal and wood supports and anchorage for mechanical materials and equipment.

C. Samples: Of color, lettering style and other graphic representation required for each identification material and device.

1.5 QUALITY ASSURANCE

A. Equipment Selection: Equipment of higher electrical characteristics, physical dimensions, capacities, and ratings may be furnished provided such proposed equipment is approved in writing and connecting mechanical and electrical services, circuit breakers, conduit, motors, bases, and equipment spaces are increased. Additional costs shall be approved in advance by appropriate Contract Modification for these increases. If minimum energy ratings or efficiencies of equipment are specified, equipment must meet design and commissioning requirements.

1.6 DELIVERY, STORAGE, AND HANDLING

A. Deliver pipes and tubes with factory-applied end caps. Maintain end caps through shipping, storage, and handling to prevent pipe end damage and prevent entrance of dirt, debris, and moisture.

B. Protect stored pipes and tubes from moisture and dirt. Elevate above grade. Do not exceed structural capacity of floor, if stored inside.

C. Protect flanges, fittings, and piping specialties from moisture and dirt.

D. Store plastic pipes protected from direct sunlight. Support to prevent sagging and bending.

1.7 SEQUENCING AND SCHEDULING

A. Coordinate mechanical equipment installation with other building components.

B. Arrange for pipe spaces, chases, slots, and openings in building structure during progress of construction to allow for mechanical installations.

C. Coordinate installation of required supporting devices and set sleeves in poured-in-place concrete and other structural components, as they are constructed.

D. Sequence, coordinate, and integrate installations of mechanical materials and equipment for efficient flow of the Work. Coordinate installation of large equipment requiring positioning before closing in building.

E. Coordinate connection of mechanical systems with exterior underground and overhead utilities and services. Comply with requirements of governing regulations, franchised service companies, and controlling agencies.

F. Coordinate requirements for access panels and doors if mechanical items requiring access are concealed behind finished surfaces. Access panels and doors are specified in Division 8 Section "Access Doors."

G. Coordinate installation of identifying devices after completing covering and painting, if devices are applied to surfaces. Install identifying devices before installing acoustical ceilings and similar concealment.

PART 2 - PRODUCTS

2.1 MANUFACTURERS

A. Available Manufacturers: Subject to compliance with requirements, manufacturers offering products that may be incorporated into the Work include, but are not limited to, the following:

B. Identifying Devices and Labels

1. Seton Name Plate Corporation
2. Brady Co., Signmark Division
3. Industrias Safety Supply Co.
4. Allen Systems, Inc.

2.2 MOTORS

A. General Construction and Requirements

1. Motors shall comply with ASHRAE/IES 90.1, NEMA MG-1, and IEEE 112 for their application, characteristics, and testing.
2. Motors less than 250 Watts, for Intermittent Service: Equipment manufacturer's standard and need not conform to these standards.
3. Speed in excess of 1800 RPM shall not be allowed unless specifically identified by the Engineer.
4. Type:
    a. Open drip-proof except where specifically noted otherwise.
    b. Motors: Design for continuous operation in 40 degree C environment.
    c. Design for temperature rise in accordance with NEMA MG 1 limits for insulation class, service factor, and motor enclosure type.
    d. Motors 1 HP and larger: Energy Efficient Type, having a minimum efficiency in accordance with NEMA 12.8 Column C.

2.3 IDENTIFYING DEVICES AND LABELS

A. General: Manufacturer's standard products of categories and types required for each application as referenced in other Division 15 Sections. If more than one type is specified for application, selection is Installer's option, but provide one selection for each product category.

B. Equipment Nameplates: Metal nameplate with operational data engraved or stamped; permanently fastened to equipment.

1. Data: Manufacturer, product name, model number, serial number, capacity, operating and power characteristics, labels of tested compliances, and similar essential data.
2. Location: Accessible and visible location.
3. VAV terminal units shall have an engraved plastic label attached to the ceiling grid below, indicating the equipment tag from the plans.

C. Snap-on Plastic Pipe Markers: Manufacturer's standard preprinted, semirigid, snap on, color-coded, complying with ASME A13.1.

D. Pressure-Sensitive Pipe Markers: Manufacturer's standard preprinted, permanent adhesive, color-coded, pressure-sensitive vinyl, complying with ASME A13.1.

E. Plastic Duct Markers: Manufacturer's standard color-coded, laminated plastic. Comply with the following color code:
   1. Green: Cold air.
   2. Yellow: Hot air.
   3. Yellow/Green or Green: Supply air.
   4. Blue: Exhaust, outside, return, and mixed air.
   5. For hazardous exhausts, use colors and designs recommended by ASME A13.1.
   6. Nomenclature: Include the following:
      a. Direction of airflow.
      b. Duct service.
      c. Duct origin.
      d. Duct destination.
      e. Design cubic feet per meter (liters per second).
   7. Engraved Plastic-Laminate Signs: ASTM D 709, Type I, cellulose, paper-base, phenolic-resin-laminate engraving stock; Grade ES-2, black surface, black phenolic core, with white melamine subcore, unless otherwise indicated.
   8. Fabricate in sizes required for message.
   9. Engraved with engraver's standard letter style, of sizes and with wording to match equipment identification.
   10. Thickness: 1/16 inch (1.6 mm), for units up to 20 sq. in. (130 sq. cm) or 8 inches (200 mm) long; 1/8 inch (3.2 mm) for larger units.
   11. Fasteners: Self-tapping stainless-steel screws or contact-type permanent adhesive.

F. Plastic Equipment Markers: Color-coded, laminated plastic. Comply with the following color code:
   1. Green: Cooling equipment and components.
   2. Yellow: Heating equipment and components.
   3. Yellow/Green: Combination cooling and heating equipment and components.
   4. Brown: Energy reclamation equipment and components.
   5. Blue: Equipment and components that do not meet any criteria above.
   6. For hazardous equipment, use colors and designs recommended by ASME A13.1.
   7. Nomenclature: Include the following, matching terminology on schedules as closely as possible:
      a. Name and plan number.
      b. Equipment service.
      c. Design capacity.
      d. Other design parameters such as pressure drop, entering and leaving conditions, and rpm.
   8. Size: Approximate 2-1/2 by 4 inches (65 by 100 mm) for control devices, dampers, and valves; and 4-1/2 by 6 inches (115 by 150 mm) for equipment.

G. Lettering and Graphics: Coordinate names, abbreviations, and other designations used in mechanical identification, with corresponding designations indicated. Use numbers, lettering, and wording indicated for proper identification and operation/maintenance of mechanical systems and equipment.

1. Multiple Systems: If multiple systems of same generic name are indicated, provide identification that indicates individual system number and service such as "Boiler No. 3," "Air Supply No. 1H," or "Standpipe F12."

H. Detectable Locating Tape: For buried lines, provide 3" wide by full length yellow detectable marking tape, with wording similar to: “Caution: Buried Line Below. (State Service).”

2.13 GROUT

A. Nonshrink, Nonmetallic Grout: ASTM C 1107, Grade B.

1. Characteristics: Post-hardening, volume-adjusting, dry, hydraulic-cement grout, nonstaining, noncorrosive, nongaseous, and recommended for interior and exterior applications.
2. Design Mix: 5000-psig (34.5-MPa), 28-day compressive strength.
3. Packaging: Premixed and factory packaged.

PART 3 - EXECUTION

3.1 PIPING SYSTEMS - COMMON REQUIREMENTS

A. General: Install piping as described below, unless piping Sections specify otherwise. Individual Division 15 piping Sections specify unique piping installation requirements.

B. General Locations and Arrangements: Drawing plans, schematics, and diagrams indicate general location and arrangement of piping systems. Indicated locations and arrangements were used to size pipe and calculate friction loss, expansion, pump sizing, and other design considerations. Install piping as indicated, unless deviations to layout are approved on Coordination Drawings.

C. Install components with pressure rating equal to or greater than system operating pressure.

D. Aboveground, Exterior-Wall, Pipe Penetrations: Seal penetrations using sleeves and mechanical sleeve seals. Size sleeve for 1-inch (25-mm) annular clear space between pipe and sleeve for installing mechanical sleeve seals.

1. Install steel pipe for sleeves smaller than 6 inches (150 mm) in diameter.
2. Install cast-iron "wall pipes" for sleeves 6 inches (150 mm) in diameter and larger.
3. Assemble and install mechanical sleeve seals according to manufacturer's written instructions. Tighten bolts that cause rubber sealing elements to expand and make watertight seal.

E. Underground, Exterior-Wall, Pipe Penetrations: Install cast-iron "wall pipes" for sleeves. Seal pipe penetrations using mechanical sleeve seals. Size sleeve for 1-inch (25-mm) annular clear space between pipe and sleeve for installing mechanical sleeve seals.

1. Assemble and install mechanical sleeve seals according to manufacturer's written instructions. Tighten bolts that cause rubber sealing elements to expand and make watertight seal.

F. Fire-Barrier Penetrations: Maintain indicated fire rating of walls, partitions, ceilings, and floors at pipe penetrations. Seal pipe penetrations with firestopping materials. Refer to Division 15 Section "Firestopping" for materials.

G. Verify final equipment locations for roughing-in.

H. Refer to equipment specifications in other Sections of these Specifications for roughing-in requirements.

3.2 EQUIPMENT INSTALLATION - COMMON REQUIREMENTS

A. Install equipment to provide maximum possible headroom, if mounting heights are not indicated.

B. Install equipment according to approved submittal data. Portions of the Work are shown only in diagrammatic form. Refer conflicts to Engineer.

C. Install equipment level and plumb, parallel and perpendicular to other building systems and components in exposed interior spaces, unless otherwise indicated.

D. Install mechanical equipment to facilitate service, maintenance, and repair or replacement of components. Connect equipment for ease of disconnecting, with minimum interference to other installations. Extend grease fittings to accessible locations.

E. Install equipment giving right of way to piping installed at required slope.

F. Install flexible connectors on equipment side of shutoff valves, horizontally and parallel to equipment shafts if possible.

3.3 LABELING AND IDENTIFYING

A. Piping Systems: Install pipe markers on each system. Include arrows showing normal direction of flow.

1. Plastic markers with application systems. Install on insulation segment if required for hot, uninsulated piping.

2. Locate pipe markers as follows if piping is exposed in finished spaces, machine rooms, and accessible maintenance spaces, such as shafts, tunnels, plenums, and exterior non-concealed locations:

B. Near each valve and control device.

C. Near each branch, excluding short takeoffs for fixtures and terminal units. Mark each pipe at branch, if flow pattern is not obvious.

D. Near locations if pipes pass through walls, floors, ceilings, or enter nonaccessible enclosures.

E. At access doors, manholes, and similar access points that permit view of concealed piping.

F. Near major equipment items and other points of origination and termination.

G. Spaced at maximum of 50-foot (15-m) intervals along each run. Reduce intervals to 25 feet (7.5 m) in congested areas of piping and equipment.

H. On piping above removable acoustical ceilings, except omit intermediately spaced markers.

I. Equipment: Install engraved plastic-laminate sign or equipment marker on or near each major item of mechanical equipment preferably on the motor starter or disconnect switch.

1. Lettering Size: Minimum 1/4-inch- (6.4-mm-) high lettering for name of unit if viewing distance is less than 24 inches (610 mm), 1/2-inch- (12.7-mm-) high lettering for distances up to 72 inches (1800 mm), and proportionately larger lettering for greater distances. Provide secondary lettering two-thirds to three-fourths of size of principal lettering.

2. Text of Signs: Provide name of identified unit. Include text to distinguish between multiple units, inform user of electrical panel and circuit number.

3. For VAV terminal units installed above access ceilings, mount identification label on T-grid below unit.

J. Duct Systems: Identify air supply, return, exhaust, intake, and relief ducts with duct markers; or provide stenciled signs and arrows, showing duct system service and direction of flow.
   1. Location: In each space, if ducts are exposed or concealed by removable ceiling system, locate signs near points where ducts enter into space and at maximum intervals of 50 feet (15 m).

K. Adjusting: Relocate identifying devices as necessary for unobstructed view in finished construction.

L. Buried Lines: Provide detectable warning tape, to be placed 8" below surface and 8" above pipe, two levels of tape required.

3.4 CONCRETE BASES

A. Construct concrete bases of dimensions indicated, but not less than 4 inches (100 mm) larger in both directions than supported unit. Follow supported equipment manufacturer's setting templates for anchor bolt and tie locations. Use 3000-psig (20.7-MPa), 28-day compressive-strength concrete and reinforcement.
   1. Concrete shall be plant mixed, bag mix concrete is not allowed.

3.5 ERECTION OF METAL SUPPORTS AND ANCHORAGE

A. Cut, fit, and place miscellaneous metal supports accurately in location, alignment, and elevation to support and anchor mechanical materials and equipment.

B. Field Welding: Comply with AWS D1.1, "Structural Welding Code--Steel."

3.6 CUTTING AND PATCHING

A. Cut, channel, chase, and drill floors, walls, partitions, ceilings, and other surfaces necessary for mechanical installations. Perform cutting by skilled mechanics of trades involved.

B. Repair cut surfaces to match adjacent surfaces.

3.7 GROUTING

A. Install nonmetallic, nonshrink, grout for mechanical equipment base bearing surfaces, pump and other equipment base plates, and anchors. Mix grout according to manufacturer's written instructions.

B. Clean surfaces that will come into contact with grout.

C. Provide forms as required for placement of grout.

D. Avoid air entrapment during placing of grout.

E. Place grout, completely filling equipment bases.

F. Place grout on concrete bases to provide smooth bearing surface for equipment.

G. Place grout around anchors.

H. Cure placed grout according to manufacturer's written instructions.

END OF SECTION

SECTION 15075 - HANGERS AND SUPPORTS FOR MECHANICAL PIPING AND EQUIPMENT

PART 1 - GENERAL

1.1 RELATED DOCUMENTS

A. Drawings and general provisions of the Contract, including General and Supplementary Conditions and Division 1 Specification Sections, apply to this Section.

1.2 SUMMARY

A. This Section includes hangers and supports for mechanical, plumbing and fire protection system piping and equipment.

1.3 DEFINITIONS

A. MSS: Manufacturers Standardization Society for the Valve and Fittings Industry.

B. Terminology: As defined in MSS SP-90, "Guidelines on Terminology for Pipe Hangers and Supports."

1.4 PERFORMANCE REQUIREMENTS

A. Design channel support systems for piping to support multiple pipes capable of supporting combined weight of supported systems, system contents, and test water.

B. Design heavy-duty steel trapezes for piping to support multiple pipes capable of supporting combined weight of supported systems, system contents, and test water.

1.5 SUBMITTALS

A. Product Data: For each type of pipe hanger, channel support system component, and thermal-hanger shield insert indicated.

PART 2 - PRODUCTS

2.1 MANUFACTURERS

A. Available Manufacturers: Subject to compliance with requirements, manufacturers offering products that may be incorporated into the Work include, but are not limited to, the following:

1. Channel Support Systems:
    a. B-Line Systems, Inc.
    b. Grinnell Corp.; Power-Strut Unit.
    c. GS Metals Corp.
    d. Michigan Hanger Co., Inc.; O-Strut Div.
    e. National Pipe Hanger Corp.
    f. Thomas & Betts Corp.
    g. Unistrut Corp.
    h. Wesanco, Inc.
    i. Tolco Pipe Hanger and Support Systems
2. Powder-Actuated Fastener Systems:
    a. Gunnebo Fastening Corp.
    b. Hilti, Inc.
    c. ITW Ramset/Red Head.
    d. Masterset Fastening Systems, Inc.

2.2 MANUFACTURED UNITS

A. Channel Support Systems: MFMA-2, factory-fabricated components for field assembly.
   1. Coatings: Manufacturer's standard finish, unless bare metal surfaces are indicated.
   2. Nonmetallic Coatings: On attachments for electrolytic protection where attachments are in direct contact with copper tubing.

B. Thermal-Hanger Shield Inserts: 100-psi (690-kPa) minimum compressive-strength insulation, encased in sheet metal shield.

   1. Material for Cold Piping: ASTM C 552, Type I cellular glass or water-repellent-treated, ASTM C 533, Type 1 calcium silicate with vapor barrier.
   2. Material for Hot Piping: ASTM C 552, Type I cellular glass or water-repellent-treated, ASTM C 533, Type I calcium silicate.
   3. For Trapeze or Clamped System: Insert and shield cover entire circumference of pipe.
   4. For Clevis or Band Hanger: Insert and shield cover lower 180 degrees of pipe.
   5. Insert Length: Extend 2 inches (50 mm) beyond sheet metal shield for piping operating below ambient air temperature.

2.3 MISCELLANEOUS MATERIALS

A. Powder-Actuated Drive-Pin Fasteners: Powder-actuated-type, drive-pin attachments with pull-out and shear capacities appropriate for supported loads and building materials where used.

B. Mechanical-Anchor Fasteners: Insert-type attachments with pull-out and shear capacities appropriate for supported loads and building materials where used.

C. Structural Steel: ASTM A 36/A 36M, steel plates, shapes, and bars, black and galvanized.

PART 3 - EXECUTION

3.1 HANGER AND SUPPORT APPLICATIONS

A. Comply with MSS SP-69 for pipe hanger selections and applications that are not specified in piping system Specification Sections.

3.2 HANGER AND SUPPORT INSTALLATION

A. Refrigerant Piping: Provide cushion clamp hangers.

B. Pipe Hanger and Support Installation: Comply with MSS SP-69 and MSS SP-89. Install hangers, supports, clamps, and attachments as required to properly support piping from building structure.

C. Channel Support System Installation: Arrange for grouping of parallel runs of piping and support together on field-assembled channel systems.
   1. Field assemble and install according to manufacturer's written instructions.

D. Install building attachments within concrete slabs or attach to structural steel. Space attachments within maximum piping span length indicated in MSS SP-69. Install additional attachments at concentrated loads, including valves, flanges, guides, strainers, and expansion joints, and at changes in direction of piping. Install concrete inserts before concrete is placed; fasten inserts to forms and install reinforcing bars through openings at top of inserts.

E. Caution: Verify suitability, for use in lightweight concrete or concrete slabs less than 4 inches (100 mm) thick, of fasteners in two paragraphs below.

F. Install powder-actuated drive-pin fasteners in concrete after concrete is placed and completely cured. Use operators that are licensed by powder-actuated tool manufacturer. Install fasteners according to powder-actuated tool manufacturer's operating manual.

G. Install mechanical-anchor fasteners in concrete after concrete is placed and completely cured. Install fasteners according to manufacturer's written instructions.

H. Install hangers and supports complete with necessary inserts, bolts, rods, nuts, washers, and other accessories.

I. Install hangers and supports to allow controlled thermal and seismic movement of piping systems, to permit freedom of movement between pipe anchors, and to facilitate action of expansion joints, expansion loops, expansion bends, and similar units.

J. Load Distribution: Install hangers and supports so that piping live and dead loads and stresses from movement will not be transmitted to connected equipment.

K. Pipe Slopes: Install hangers and supports to provide indicated pipe slopes and so maximum pipe deflections allowed by ASME B31.9, "Building Services Piping," is not exceeded.

L. Insulated Piping: Comply with the following:

1. Attach clamps and spacers to piping.
    a. Piping Operating above Ambient Air Temperature: Clamp may project through insulation.
    b. Piping Operating below Ambient Air Temperature: Use thermal-hanger shield insert with clamp sized to match OD of insert. Provide thermal break between piping and clamp.
    c. Do not exceed pipe stress limits according to ASME B31.9.
2. Install MSS SP-58, Type 39 protection saddles, if insulation without vapor barrier is indicated. Fill interior voids with insulation that matches adjoining insulation.
    a. Option: Thermal-hanger shield inserts may be used. Include steel weight-distribution plate for pipe NPS 4 (DN100) and larger if pipe is installed on rollers.
3. Install MSS SP-58, Type 40 protective shields on cold piping with vapor barrier. Shields shall span arc of 180 degrees.
    a. Option: Thermal-hanger shield inserts may be used. Include steel weight-distribution plate for pipe NPS 4 (DN100) and larger if pipe is installed on rollers.

3.3 INSTALLATION OF HANGERS AND SUPPORTS

A. General: Install hangers, supports, clamps and attachments to support piping properly from building structure; comply with MSS SP-69 and SP-89. Arrange for grouping of parallel runs of horizontal piping supported together on field-fabricated, heavy-duty trapeze hangers where possible. Install supports with maximum spacings complying with MSS SP-69. Where piping of various sizes is supported together by trapeze hangers, space hangers for smallest pipe size or install intermediate supports for smaller diameter pipe as specified above for individual pipe hangers.

PIPE SIZE	MAX. HANGER SPACING	HANGER DIAMETER
1/2 to 1-1/4 inch	6’-6”	3/8”
1-1/2 to 2 inch	10’-0”	3/8”
2-1/2 to 3 inch	10’-0”	1/2”
4 inch	14’-0”	5/8”
6 inch	17’-0”	3/4”
8 inch	19-0”	3/4"
PVC (All sizes)	6’-0”	3/8”

B. Grooved Pipe Systems: Grooved pipe systems, such as “Victaulic” shall be supported at hanger spacings recommended by the manufacturer, but in no case father apart than this chart.

3.4 EQUIPMENT SUPPORTS

A. Fabricate structural-steel stands to suspend equipment from structure above or to support equipment above floor.

B. Grouting: Place grout under supports for equipment and make smooth bearing surface.

3.5 METAL FABRICATION

A. Cut, drill, and fit miscellaneous metal fabrications for heavy-duty steel trapezes and equipment supports.

B. Fit exposed connections together to form hairline joints. Field-weld connections that cannot be shop-welded because of shipping size limitations.

C. Field Welding: Comply with AWS D1.1 procedures for shielded metal arc welding, appearance and quality of welds, and methods used in correcting welding work, and with the following:

1. Use materials and methods that minimize distortion and develop strength and corrosion resistance of base metals.
2. Obtain fusion without undercut or overlap.
3. Remove welding flux immediately.
4. Finish welds at exposed connections so no roughness shows after finishing and contours of welded surfaces match adjacent contours.

3.6 ADJUSTING

A. Hanger Adjustment: Adjust hangers to distribute loads equally on attachments and to achieve indicated slope of pipe.

3.7 PAINTING

A. Touching Up: Clean field welds and abraded areas of shop paint. Paint exposed areas immediately after erecting hangers and supports. Use same materials as used for shop painting. Comply with SSPC-PA 1 requirements for touching up field-painted surfaces.

1. Apply paint by brush or spray to provide a minimum dry film thickness of 2.0 mils (0.05 mm).

B. Touching Up: Cleaning and touchup painting of field welds, bolted connections, and abraded areas of shop paint on miscellaneous metal are specified in Division 9 Section "Painting."

C. Galvanized Surfaces: Clean welds, bolted connections, and abraded areas and apply galvanizing-repair paint to comply with ASTM A 780.

END OF SECTION

SECTION 15900 - INSTRUMENTATION AND CONTROLS FOR HVAC

PART 1 - GENERAL

1.1 RELATED DOCUMENTS

A. Drawings and general provisions of the Contract, including General and Supplementary Conditions and Division 1 Specification Sections, apply to this Section.

1.2 SUMMARY

A. This Section includes control equipment for HVAC systems and components, including control components for terminal heating and cooling units not supplied with factory-wired controls, as required for a complete and workable system.

B. Related Sections include the following:

1. "Sequences of Operation" are specified on the plans.
2. Section 15010 “General Mechanical Requirements.”
3. Section 15040 "Common Work Results for Mechanical.
4. Section 15950 "Testing, Adjusting, and Balancing.”

1.3 SUBMITTALS

A. Product Data: Include manufacturer's technical literature for each control device. Indicate dimensions, capacities, performance characteristics, electrical characteristics, finishes for materials, and installation and startup instructions for each type of product indicated.

1. Each control device labeled with setting or adjustable range of control.

B. Shop Drawings: Detail equipment assemblies and indicate dimensions, weights, loads, required clearances, method of field assembly, components, and location and size of each field connection.

1. Schematic flow diagrams showing fans, pumps, coils, dampers, valves, and control devices.
2. Wiring Diagrams: Power, signal, and control wiring. Differentiate between manufacturer-installed and field-installed wiring.
3. Details of control panel faces, including controls, instruments, and labeling.
4. Written description of sequence of operation.
5. Schedule of dampers including size, leakage, and flow characteristics.
6. Schedule of valves including leakage and flow characteristics.
7. Trunk cable schematic showing programmable control unit locations and trunk data conductors.
8. Listing of connected data points, including connected control unit and input device
9. System graphics indicating monitored systems, data (connected and calculated) point addresses, and operator notations.
10. System configuration showing peripheral devices, batteries, power supplies, diagrams, modems, and interconnections.

C. Project Record Documents: Record actual locations of control components, including control units, thermostats, and sensors. Revise Shop Drawings to reflect actual installation and operating sequences.

1.4 QUALITY ASSURANCE

A. Installer Qualifications: An experienced installer who is a direct factory branch of the automatic control system manufacturer for both installation and maintenance of units required for this Project.

B. Electrical Components, Devices, and Accessories: Listed and labeled as defined in NFPA 70, Article 100, by a testing agency acceptable to authorities having jurisdiction, and marked for intended use.

C. Comply with NFPA 90A, "Installation of Air Conditioning and Ventilation Systems."

D. Comply with ASHRAE 135 for DDC system control components.

1.5 DELIVERY, STORAGE, AND HANDLING

A. Factory-Mounted Components: Where control devices specified in this Section are indicated to be factory mounted on equipment, arrange for shipping of control devices to unit manufacturer.

1.6 COORDINATION

A. Coordinate location of thermostats, humidistats, CO2 sensors and other exposed control sensors with plans and room details before installation.

B. Coordinate equipment with Division 16 to achieve compatibility with equipment that interfaces with that system.

C. Coordinate supply of conditioned electrical circuits for control units and operator workstation.

D. Coordinate equipment with Division 16 to achieve compatibility with motor starters and annunciation devices.

E. Coordinate size and location of concrete bases. Cast anchor-bolt inserts into bases. Concrete, reinforcement, and formwork requirements are specified in Division 3 Section "Cast-in-Place Concrete."

PART 2 - PRODUCTS

2.1 SENSORS

A. Equipment operation sensors as follows:

1. Status Inputs Fans: Differential for -pressure switch with adjustable range of 0 to 5 inches wg (0 to 1243 Pa), or current sensors (contractor's option).
2. Status Inputs for Pumps: Differential-pressure switch piped across pump with adjustable pressure-differential range of 8 to 60 psig (55 to 414 kPa), or current sensor's (contractor's option).
3. Current sensors shall be equipped with trim pot for zero load calibration.

B. Status Inputs for Electric Motors: Current-sensing relay with current transformers, adjustable and set to 175 percent of rated motor current.

1. Current sensors shall be equipped with trim pot for zero load calibration.

C. Current sensing relays shall be field adjustable with a pilot light indicating a contact closed condition.

D. Current sensors shall have sufficient sensitivity to allow for the indication of a no load or broken belt condition.

E. Water-Flow Switches: Pressure-flow switches of bellows-actuated mercury or snap-acting type, with appropriate scale range and differential adjustment, with stainless-steel or bronze paddle.

For chilled-water applications, provide vaporproof type. Paddle type switches are not permitted.

F. Humidity Sensors: solid state humidity sensor with 0-10Vdc output. Accuracy +/-5% between 20 and 80% relative humidity. Temperature compensated.

G. CO2 Sensors: These shall be installed in locations as shown on points list and sequences.
   1. These shall be self-calibrating devices with a 5-year calibration guarantee.
   2. CO2 sensors for AHU zones such as gyms and cafeterias shall be enclosed with a lockable protective cover if mounted in the space. Return duct mounted devices do not require covers.

2.2 THERMOSTATS

A. Room Thermostat: room thermostats shall be furnished and installed by this section where indicated on the plans. Room thermostats shall be "warmer/cooler" stats, no temperatures shown.
   1. Set-Point Adjustment: Plus or minus 3ºF from nominal 72ºF set point. (software adjustable)
   2. Set-Point Indication: No.
   3. Timed Override Push Button: Yes
   4. Space Temperature Indication: None.

B. Room thermostat accessories include the following:
   1. Insulating Bases: For thermostats located on exterior walls or on the fan section of unit ventilators. Thermostat wiring shall have a properly sized grommet or caulking to eliminate air leakage into the back of the stat.

2.3 ACTUATORS

A. Valve and damper actuation shall be electric. All controls shall be digital.

B. Electric Motors: Size to operate with sufficient reserve power to provide smooth modulating action or two-position action.
   1. Permanent Split-Capacitor or Shaded-Pole Type: Gear trains completely oil immersed and sealed. Equip spring-return motors with integral spiral-spring mechanism in housings designed for easy removal for service or adjustment of limit switches, auxiliary switches, or feedback potentiometer.
   2. Non-spring-Return Motors for Valves Larger than NPS 2-1/2 (DN 65): Size for running torque of 150 in. x lbf (16.9 N x m) and breakaway torque of 300 in. x lbf (33.9 N x m).
   3. Spring-Return Motors for Valves Larger than NPS 2-1/2 (DN 65): Size for running and breakaway torque of 150 in. x lbf (16.9 N x m).
   4. Non-spring-Return Motors for Dampers Larger than 25 Sq. Ft. (2.3 sq. m): Size for running torque of 150 in. x lbf (16.9 N x m) and breakaway torque of 300 in. x lbf (33.9 N x m).
   5. Spring-Return Motors for Dampers Larger than 25 Sq. Ft. (2.3 sq. m): Size for running and breakaway torque of 150 in. x lbf (16.9 N x m).

C. Electronic Actuators: Direct-coupled type designed for minimum 60,000 full-stroke cycles at rated torque.
   1. Valves: Size for torque required for valve close-off at maximum pump differential pressure, 50 psi minimum.
   2. Dampers: Size for running torque calculated as follows:
      a. 7 inch-pounds/sq. ft. (86.8 kg-cm/sq. m) of damper.
   3. Coupling: V-bolt and V-shaped, toothed cradle

4. Overload Protection: Electronic overload or digital rotation-sensing circuitry
5. Fail-Safe Operation: Mechanical, spring-return mechanism. Provide external, manual gear release on non-spring-return actuators.
6. Temperature Rating: Minus 22 to plus 122 deg F (minus 30 to plus 50 deg C).

2.4 CONTROL VALVES

A. Control Valves: Factory fabricated, of type, body material, and pressure class based on maximum pressure and temperature rating of piping system, unless otherwise indicated.
   1. Minimum shut-off pressure shall be 50 psi differential.
   2. Change-over valve shall have end switches.

B. Globe Valves 1-1/4" and Smaller: Bronze body, bronze trim, rising stem, renewable composition disc, and screwed ends with the following characteristics.
   1. Rating: Class 125 for service at 125 psig (862 kPa) and 250 deg F (121 deg C) operating conditions.
   2. Internal Construction: Replaceable plugs and seats of stainless steel or brass
      a. Single-Seated Valves: Cage trim provides seating and guiding surfaces for plug on top and bottom of guided plugs
      b. Double-Seated Valves: Balanced plug; cage trim provides seating and guiding surfaces for plugs on top and bottom of guided plugs.
   3. Sizing: 3-psig (21-kPa) maximum pressure drop at design flow rate
   4. Flow Characteristics: Two-way valves shall have equal percentage characteristics; three-way valves shall have linear characteristics. Operators shall close valves against pump shutoff head, 50 psi minimum.

C. Butterfly Valves: 200-psig (1380-kPa), 150-psig (1035-kPa) maximum pressure differential, ASTM A 126 cast-iron or ASTM A 536 ductile-iron body and bonnet, extended neck, stainless-steel stem, field-replaceable EPDM or Buna N sleeve and stem seals.
   1. Change-over valves and chiller or boiler isolation valves shall have end switches.

D. Terminal Unit Control Valves: Bronze body, bronze trim, two- or three-port as indicated, replaceable plugs and seats, union and threaded ends.
   1. Rating: Class 125 for service at 125 psig (862 kPa) and 250 deg F (121 deg C) operating conditions
   2. Sizing: 3-psig (21-kPa) maximum pressure drop at design flow rate, to close against pump shutoff head
   3. Flow Characteristics: Two-way valves shall have equal percentage characteristics; three-way valves shall have linear characteristics.

2.5 DAMPERS

A. Dampers: AMCA-rated, opposed-blade design; 0.1084-inch (2.8-mm) minimum, galvanized-steel frames with holes for duct mounting; damper blades shall not be less than 0.0635-inch (1.6-mm) galvanized steel with maximum blade width of 8 inches (203 mm).
   1. Blades shall be secured to 1/2-inch- (13-mm-) diameter, zinc-plated axles using zinc-plated hardware, with nylon blade bearings, blade-linkage hardware of zinc-plated steel and brass, ends sealed against spring-stainless-steel blade bearings, and thrust bearings at each end of every blade
   2. Operating Temperature Range: From minus 40 to plus 200 deg F (minus 40 to plus 93 deg C)
   3. For standard applications, include optional closed-cell neoprene edging

4. For low-leakage applications, use parallel- or opposed-blade design with inflatable seal blade edging, or replaceable rubber seals, rated for leakage at less than 10 cfm per sq. ft. (51 L/s per sq. m) of damper area, at differential pressure of 4 inches wg (995 Pa) when damper is being held by torque of 50 in. x lbf (5.6 N x m); when tested according to AMCA 500D.
5. Dampers shall be TAMCO, Greenheck or approved equal.

PART 3 - EXECUTION

3.1 ELECTRICAL WIRING AND CONNECTION INSTALLATION

A. Install raceways, boxes, and cabinets according to Division 16
B. Install building wire and cable according to Division 16
   1. Control cable shall be color orange
   2. Control cable shall be run in J-hooks, parallel to walls. Diagonal routing shall not be allowed.
C. Install signal and communication cable according to Division 16
   1. Conceal cable, except in mechanical rooms and areas where other conduit and piping are exposed
   2. Install exposed cable in raceway
   3. Install concealed cable in raceway. Open "plenum rated" cables shall be allowed in concealed accessible areas.
   4. Bundle and harness multi-conductor instrument cable in place of single cables where several cables follow a common path.
   5. Fasten flexible conductors, bridging cabinets and doors, along hinge side; protect against abrasion. Tie and support conductors.
   6. Number-code or color-code conductors for future identification and service of control system, except local individual room control cables.
   7. All temp control cable shall be orange in color.
D. Low voltage conductors shall not be run in the same conduit as power wiring or VFD output wiring
E. Unless specifically noted otherwise, exposed conduits shall be permitted only in mechanical spaces. Conduit in mechanical rooms, boiler rooms, tunnels and other areas exposed to moisture shall be rigid conduit. Other exposed conduit shall be EMT
F. Provide isolation strips between class I and class II wiring.
G. All relay bases must be Din Rail mounted in a 6” square x 4” deep enclosure. Provide nylon, or plastic grommets at all locations where wires penetrate the enclosure.

3.2 CONNECTIONS

A. Piping installation requirements are specified in other Division 15 Sections. Drawings indicate general arrangement of piping, fittings, and specialties.
   1. Install piping adjacent to machine to allow service and maintenance.
B. Ground equipment
   1. Tighten electrical connectors and terminals according to manufacturer's published torque-tightening values. If manufacturer's torque values are not indicated, use those specified in UL 486A and UL 486B.

3.3 FIELD QUALITY CONTROL

A. Manufacturer's Field Service: Engage a factory-authorized service representative to inspect field-assembled components and equipment installation, including piping and electrical connections. Report results in writing.
   1. Operational Test: After electrical circuitry has been energized, start units to confirm proper unit operation. Remove malfunctioning units, replace with new units, and retest.
   2. Test and adjust controls and safeties. Replace damaged and malfunctioning controls and equipment, and retest.
   3. Calibration test electronic controllers by disconnecting input sensors and stimulating operation with compatible signal generator.

B. Engage a factory employed service representative to perform startup service. This shall be coordinated with the owner’s commissioning authority.

C. Replace damaged or malfunctioning controls and equipment.
   1. Start, test, and adjust control systems.
   2. Demonstrate compliance with requirements, including calibration and testing, and control sequences.
   3. Adjust, calibrate, and fine tune circuits and equipment to achieve sequence of operation specified.
   4. Complete installation and proper check out of the control system shall include all necessary debugging and calibration as well as demonstration of all the features of the system to the Engineer.

D. Verify DDC as follows:
   1. Verify software including automatic restart, control sequences, scheduling, reset controls, and occupied/unoccupied cycles.
   2. Verify operation of operator workstation.
   3. Verify local control units including self-diagnostics.

3.4 ON-SITE ASSISTANCE

A. Occupancy Adjustments: Within one year of date of Substantial Completion, provide up to three Project site visits, when requested by Owner, to adjust and calibrate components and to assist Owner's personnel in making program changes and in adjusting sensors and controls to suit actual conditions.

END OF SECTION

SECTION 15950 - TESTING, ADJUSTING, AND BALANCING FOR HVAC

PART 1 - GENERAL

1.1 GENERAL

A. Test and balance work shall be performed as part of the building commissioning, not the work of this contract. Specification is included for contractor's reference and coordination only.

1.2 RELATED DOCUMENTS

A. Drawings and general provisions of the Contract, including General and Supplementary Conditions and Division 1 Specification Sections, apply to this Section.

1.3 SUMMARY

A. This Section includes testing, adjusting, and balancing HVAC systems to produce design objectives, including the following:
   1. Balancing airflow and water flow within distribution systems, including submains, branches, and terminals, to indicated quantities according to specified tolerances.
   2. Adjusting total HVAC systems to provide indicated quantities.
   3. Measuring electrical performance of HVAC equipment.
   4. Setting quantitative performance of HVAC equipment.
   5. Verifying that automatic control devices are functioning properly.
   6. Verifying the operation and balance of the domestic hot water return system.
   7. Duct leakage testing
   8. Roof top unit plenum leakage testing
   9. Unit ventilator outside air plenum leakage testing
   10. Labor and material for changing of fan sheaves as required for system balance shall be included as the work of this section.

B. Related Sections include the following:
   1. Testing and adjusting requirements unique to particular systems and equipment are included in the Sections that specify those systems and equipment.
   2. Field quality-control testing to verify that workmanship quality for system and equipment installation is specified in system and equipment Sections.

1.4 SUBMITTALS

A. Certified Testing, Adjusting, and Balancing Reports: Submit 2 copies of reports prepared, as specified in this Section, on approved forms certified by the testing, adjusting, and balancing Agent.

B. Warranty: Submit 2 copies of special warranty specified in the "Warranty" Article below.

1.5 QUALITY ASSURANCE

A. TAB Firm Qualifications: Engage a TAB firm certified by either AABC or NEBB.

B. Testing, Adjusting, and Balancing Reports: Use standard forms from NEBB or AABC's "Standards for Testing, Adjusting, and Balancing."

C. Instrumentation Type, Quantity, and Accuracy: As described in AABC national standards.

1.6 PROJECT CONDITIONS

A. Partial Owner Occupancy: The Owner may occupy completed areas of the building before Substantial Completion. Cooperate with the Owner during testing, adjusting, and balancing operations to minimize conflicts with the Owner's operations.

1.7 WARRANTY

A. When warranties are required, verify with the Owner's counsel that special warranties stated in this Article are not less than remedies available to the Owner under prevailing local laws. Coordinate with Division 1 Section "Warranties."

B. General Warranty: The national project performance guarantee specified in this Article shall not deprive the Owner of other rights the Owner may have under other provisions of the Contract Documents and shall be in addition to, and run concurrent with, other warranties made by the Contractor under requirements of the Contract Documents.

C. National Project Performance Guarantee: Provide a guarantee on AABC'S or NEBB's "National Standards" forms stating that AABC or NEBB will assist in completing the requirements of the Contract Documents if the testing, adjusting, and balancing Agent fails to comply with the Contract Documents. Guarantee includes the following provisions:

1. The certified Agent has tested and balanced systems according to the Contract Documents.
2. Systems are balanced to optimum performance capabilities within design and installation limits.

PART 2 - PRODUCTS (Not Used)

PART 3 - EXECUTION

3.1 EXAMINATION

A. Examine Contract Documents to become familiar with project requirements and to discover conditions in systems' designs that may preclude proper testing, adjusting, and balancing of systems and equipment.

1. Contract Documents are defined in the General and Supplementary Conditions of the Contract.
2. Verify that balancing devices, such as test ports, gage cocks, thermometer wells, flow-control devices, balancing valves and fittings, and manual volume dampers, are required by the Contract Documents. Verify that quantities and locations of these balancing devices are accessible and appropriate for effective balancing and for efficient system and equipment operation.

B. Report deficiencies discovered before and during performance of testing, adjusting, and balancing procedures.

3.2 GENERAL TESTING AND BALANCING PROCEDURES

A. Perform testing and balancing procedures on each system according to the procedures contained in AABC national standards and this Section.

3.3 FUNDAMENTAL AIR SYSTEMS' BALANCING PROCEDURES

A. Prepare test reports for both fans and outlets. Obtain manufacturer's outlet factors and recommended testing procedures. Crosscheck the summation of required outlet volumes with required fan volumes.

B. Prepare schematic diagrams of systems' "as-built" duct layouts.

3.4 AIR SYSTEMS' BALANCING PROCEDURES

A. The procedures in this Article apply to constant-volume and variable-air-volume supply-, return-, and exhaust-air systems. These additional procedures are specified in other articles in this Section.

B. Adjust fans to deliver total design airflows within the maximum allowable rpm listed by the fan manufacturer.

1. Do not make fan-speed adjustments that result in motor overload. Consult equipment manufacturers about fan-speed safety factors. Modulate dampers and measure fan-motor amperage to ensure no overload will occur. Measure amperage in full cooling, full heating, and economizer modes to determine the maximum required brake horsepower.

C. Adjust volume dampers for main duct, submain ducts, and major branch ducts to design airflows within specified tolerances.

D. Adjust terminal outlets and inlets for each space to design airflows within specified tolerances of design values. Make adjustments using volume dampers rather than extractors and the dampers at the air terminals.

3.5 TOLERANCES

A. Set HVAC system airflow and water flow rates within the following tolerances:

1. Supply, Return, and Exhaust Fans: 0 to plus 10 percent.
2. Air Outlets and Inlets: 0 to minus 5 percent.
3. Heating-Water Flow Rate: 0 to minus 10 percent.
4. Cooling-Water Flow Rate: 0 to minus 5 percent.

3.6 REPORTING

A. Initial Construction-Phase Report: Based on examination of the Contract Documents as specified in "Examination" Article above, prepare a report on the adequacy of design for systems' balancing devices. Recommend changes and additions to systems' balancing devices to facilitate proper performance measuring and balancing. Recommend changes and additions to HVAC systems and general construction to allow access for performance measuring and balancing devices.

B. Status Reports: As Work progresses, prepare reports to describe completed procedures, procedures in progress, and scheduled procedures. Include a list of deficiencies and problems found in systems being tested and balanced. Prepare a separate report for each system and each building floor for systems serving multiple floors.

3.7 FINAL REPORT

A. General: Typewritten, or computer printout in letter-quality font, on standard bond paper, in 3-ring binder, tabulated and divided into sections by tested and balanced systems.

B. Include a certification sheet in front of binder signed and sealed by the certified testing and balancing engineer.
   1. Include a list of the instruments used for procedures, along with proof of calibration.

C. Final Report Contents: In addition to the certified field report data, include the following:
   1. Fan curves.
   2. Manufacturers' test data.
   3. Field test reports prepared by system and equipment installers.
   4. Other information relative to equipment performance, but do not include approved Shop Drawings and Product Data.

D. General Report Data: In addition to the form titles and entries, include the following data in the final report, as applicable:
   1. Title page.
   2. Name and address of testing, adjusting, and balancing Agent.
   3. Project name.
   4. Project location.
   5. Engineer's name and address.
   6. Engineer's name and address.
   7. Contractor's name and address.
   8. Report date.
   9. Signature of testing, adjusting, and balancing Agent who certifies the report.
   10. Summary of contents, including the following:
      a. Design versus final performance.
      b. Notable characteristics of systems.
      c. Description of system operation sequence if it varies from the Contract Documents.
   11. Nomenclature sheets for each item of equipment.
   12. Data for terminal units, including manufacturer, type size, and fittings.
   13. Notes to explain why certain final data in the body of reports vary from design values.
   14. Test conditions for fans and pump performance forms, including the following:
      a. Settings for outside-, return-, and exhaust-air dampers.
      b. Conditions of filters.
      c. Cooling coil, wet- and dry-bulb conditions.

d. Fan drive settings, including settings and percentage of maximum pitch diameter.
e. Settings for supply-air, static-pressure controller.
f. Other system operating conditions that affect performance.

E. System Diagrams: Include schematic layouts of air and hydronic distribution systems. Present with single-line diagrams and include the following:

1. Quantities of outside, supply, return, and exhaust airflows.
2. Duct, outlet, and inlet sizes.
3. Pipe and valve sizes and locations.
4. Terminal units.
5. Balancing stations.
6. Position of balancing devices.

F. Air-Handling Unit Test Reports: For air-handling units and unit ventilators, include the following:

1. Unit Data: Include the following:
   a. Unit identification.
   b. Location.
   c. Make and type.
   d. Model number and unit size.
   e. Manufacturer's serial number.
   f. Unit arrangement and class.
   g. Discharge arrangement.
   h. Sheave make, size in inches, and bore.
   i. Sheave dimensions, center-to-center and amount of adjustments in inches.
   j. Number of belts, make, and size.
   k. Number of filters, type, and size.
2. Motor Data: Include the following:
   a. Make and frame type and size.
   b. Horsepower and rpm.
   c. Volts, phase, and hertz.
   d. Full-load amperage and service factor.
   e. Sheave make, size in inches, and bore.
   f. Sheave dimensions, center-to-center and amount of adjustments in inches.
3. Test Data: Include design and actual values for the following:
   a. Total airflow rate in cfm.
   b. Total system static pressure in inches wg.
   c. Fan rpm.
   d. Discharge static pressure in inches wg.
   e. Filter static-pressure differential in inches wg.
   f. Preheat coil static-pressure differential in inches wg.
   g. Cooling coil static-pressure differential in inches wg.
   h. Heating coil static-pressure differential in inches wg.
   i. Outside airflow in cfm.
   j. Return airflow in cfm.

k. Outside-air damper position.
l. Return-air damper position.
m. UV outdoor air: test outdoor air volume at louver, compared to return air grille and supply duct traverse. OA plenum leakage shall not exceed 5%.

G. Roof Top Unit Reports: This shall include a fan curve with all relevant data points plotted to identify any possible curb leakage.

H. Fan Test Reports: For supply, return, and exhaust fans, include the following:
1. Fan Data: Include the following:
a. System identification.
b. Location.
c. Make and type.
d. Model number and size.
e. Manufacturer's serial number.
f. Arrangement and class.
g. Sheave make, size in inches, and bore.
h. Sheave dimensions, center-to-center and amount of adjustments in inches.
2. Motor Data: Include the following:
a. Make and frame type and size.
b. Horsepower and rpm.
c. Volts, phase, and hertz.
d. Full-load amperage and service factor.
e. Sheave make, size in inches, and bore.
f. Sheave dimensions, center-to-center and amount of adjustments in inches.
g. Number of belts, make, and size.
3. Test Data: Include design and actual values for the following:
a. Total airflow rate in cfm.
b. Total system static pressure in inches wg.
c. Fan rpm.
d. Discharge static pressure in inches wg.
e. Suction static pressure in inches wg.

I. Round, Flat-Oval, and Rectangular Duct Traverse Reports: Include a diagram with a grid representing the duct cross-section and record the following:
1. Report Data: Include the following:
a. System and air-handling unit number.
b. Location and zone.
c. Traverse air temperature in deg F.
d. Duct static pressure in inches wg.
e. Duct size in inches.
f. Duct area in sq. ft.
g. Design airflow rate in cfm.
h. Design velocity in fpm.
i. Actual airflow rate in cfm.
j. Actual average velocity in fpm.
k. Barometric pressure in psig.

J. Domestic Hot water Recirculating System Hot Water Recirculation Systems
   1. Report Data: Include the following:
      a. Pump type, make. and flow data
      b. All zone and branch piping valves

3.8 ADDITIONAL TESTS

A. Within 90 days of completing testing, adjusting, and balancing, perform additional testing and balancing to verify that balanced conditions are being maintained throughout and to correct unusual conditions.

B. Seasonal Periods: If initial testing, adjusting, and balancing procedures were not performed during near-peak summer and winter conditions, perform additional inspections, testing, and adjusting during near-peak summer and winter conditions.

END OF SECTION

DIVISION 16

ELECTRICAL AND INSTRUMENTATION & CONTROLS

SECTION 16000 – ELECTRICAL INDEX

16010	BASIC ELECTRICAL REQUIREMENTS
16047	ELECTRICAL IDENTIFICATION AND SIGNAGE
16110	RACEWAYS, CONDUIT, AND BOXES FOR ELECTRICAL SYSTEMS
16120	WIRES AND CONNECTORS
16124	INSTRUMENTATION CABLES
16143	WIRING DEVICES
16450	GROUNDING SYSTEMS
16470	PANELBOARDS
16485	DISCONNECT SWITCHES
16500	INTERIOR LIGHTING
16512	EXTERIOR LIGHTING
16671	HEAT TRACE
16700	GENERAL I&C REQUIREMENTS
16710	CONTROL PANELS
16720	FIELD INSTRUMENTATION
16730	PROCESS CONTROLS SYSTEMS - SCADA

SECTION 16010 – BASIC ELECTRICAL REQUIREMENTS

PART 1 - GENERAL

1.1 RELATED DOCUMENTS

A. Drawings and general provisions of the Contract, including General and Special Conditions apply to work of this section.

1.2 DESCRIPTION OF WORK

A. The description of work is as described in the plan drawings and specifications.
B. The Common Work Results for Electrical apply to all electrical materials, equipment, installations, and services supplied under any portion of the work. The Contractor shall coordinate the Common Work Results for Electrical as applicable to any equipment, installations, and services of an electrical nature.
C. It is the intention of this Division of the Specifications and the accompanying drawings to describe and provide for the furnishing, installing, testing and placing in satisfactory and successful operation all equipment, materials, devices and necessary appurtenances to provide a complete electrical system, together with such other miscellaneous installations and equipment hereinafter specified and/or shown on the plans. The work shall include all materials, appliances and apparatus not specifically mentioned herein or noted on the plans, but which are necessary to provide a complete working installation of all electrical systems shown on the plans or described herein. Equipment and devices furnished and installed under other Divisions of this specification (or by the Owner) shall be connected under this Division. The drawings and specifications are complementary and what is called for in either, is binding as if called for in both.
D. The contract drawings indicate the extent and the general location and arrangement of equipment, conduit and wiring. The contractor shall study plans and details and shall cooperate with all other trades to prevent conflict and interference as to space requirements. Fixtures, equipment and outlets shall be located to avoid interference with mechanical or structural features. Lighting fixtures shall be symmetrically located according to the room arrangement. Raceways, junction and outlet boxes, lighting fixtures, and all other electrical equipment shall be properly supported to comply with applicable codes and good work practices.
E. The Electrical Contractor is responsible for installation of a complete and operating electrical system in accordance with the intent of the drawings and specifications.
F. The scale of drawings cannot show all necessary transitions, offsets, changes in direction, etc. It shall be the responsibility of the Electrical Contractor to provide all pull boxes, elbows, fittings, supports, etc. necessary to install his work to conform to structures, to preserve headroom and to keep openings and passageways clear.
G. Electrical diagrams are schematic and diagrammatic only, not necessarily to scale, and do not necessarily show physical arrangement of equipment. Electrical diagrams and plans are complementary and what is shown on either is the same as if shown on both.
H. The horsepower of motors and equipment wattages indicated on the plans are based on information made available to the Engineer and field notes of existing installation, and are as accurate as practical; however, there may be discrepancies. All wiring, switches, circuit

breakers, and magnetic motor starters shall be of size and capacity to suit the horsepower of the motors and equipment actually furnished, and actually being connected; however, in no case shall wiring, switches, circuit breakers and magnetic motor starters be of smaller capacity or size than those indicated on the drawings or specified unless approved, in writing, by the Engineer.

I. Any minor changes in the location of all equipment, switchboards, panelboards, starters, fixtures, conduits, outlets, etc. from those shown on the plans shall be made without extra charge if so directed by the Engineer or Owner before installation.
   1. Minor changes in location shall be defined as within 15 feet in any direction, horizontally or vertically, from the location indicated on the drawings.

J. Make detailed arrangements with the Owner for selected electrical service work and any/all shutdowns required.
   1. Provide temporary services: The Contractor shall be responsible for, and bear the cost of, all temporary service or equipment feeders which may be required.
   2. All shutdown and power transfer work must be closely scheduled with the Owner, approved in advance by the Owner, and at the convenience of the Owner; and shall be performed only with the Owner present and/or under direct/indirect supervision of the Owner.
   3. Power shutdowns and transfers must be scheduled with the Owner and all such shutdowns and transfers shall be scheduled at the Owner's convenience. At the Owner's discretion, work may be required to be performed on holidays, weekends, evenings, early mornings, and during similar non-standard work periods, without additional cost to the Owner.
      a. The above requirement for performing work during non-standard work periods also applies to any work that can only be safely performed during a power shutdown.

1.3 PERMITS AND FEES

A. This work shall include the procurement of, and payment for, all permits and fees required for the performance of the electrical work.

1.4 COORDINATION OF ELECTRICAL WORK

A. Contract documents are diagrammatic in showing certain physical relationships, which must be established; such establishment and the final physical relationship is the exclusive responsibility of the Contractor.
   1. Arrange electrical work in a neat, well-organized manner with conduit and similar services running parallel with primary lines of structures, and which shall maximize overhead clearance.
   2. Locate operating and control equipment and arrange entire electrical work with adequate access for operation and maintenance, and in accordance with all applicable governing codes.
   3. Advise other trades of openings required in their work, and scheduling cooperation required, for the subsequent move-in of large units of electrical work (equipment, conduits, pull boxes, etc.).

1.5 COORDINATION OF OPTION, SUBSTITUTIONS, AND ARRANGEMENT

A. Where the contract documents permit the selection from several product options, and where it becomes necessary to authorize a substitution, do not proceed with purchasing until

coordination of interface requirements has been checked and satisfactorily established.

B. The Contractor will not be paid for cutting, patching, retrofitting, and finishing required for relocation of work installed due to interference and improperly located equipment.

1.6 QUALITY ASSURANCE

A. In case of difference between building codes, state laws and federal laws, local ordinances, industry standards and utility regulations and the Contract Documents, the most stringent shall govern. The Contractor shall promptly notify the Engineer in writing of any such difference.

1.7 NON-COMPLIANCE

A. Should the Contractor perform any work that does not comply with the requirements of the applicable building codes, state and federal laws, local ordinances, industry standards and utility regulations, they shall bear all costs in correcting all deficiencies.

B. Applicable codes and standards shall include all the state laws, local ordinances, utility company regulations and the applicable requirements of the following nationally accepted codes and standards. All of the following codes shall apply to the equipment, and equipment installation, where applicable. All equipment shall bear U.L. labels where labeled equipment is available.

C. Industry Standards, Codes and Specifications

1. NEC National Electrical Code (NFPA No. 70) with State Amendments
2. UBC International Building Code with State Amendments
3. ANSI C2 National Electrical Safety Code.
4. IEEE Institute of Electrical and Electronics Engineers.
5. ASTM American Society of Testing Materials.
6. IPCEA Insulated Power Cable Engineers Association.
7. NEMA National Electrical Manufacturers Association.
8. NFPA National Fire Protection Association.
9. UL Underwriters Laboratories.
10. NECA Standard of Installation, National Electrical Contractor's Association.
11. NFPA No. 101 Life Safety Code.
12. FMFactory Mutual
13. ADA Americans with Disabilities Act

D. All electric materials shall be new, in original cartons, bundles, or shipping crates and shall have a U.L. label whenever available.

E. Nothing in these drawings and specifications shall be construed to permit work not conforming to governing codes; and shall not be construed as relieving the Contractor from complying with any requirements of the plans or specifications which may exceed requirements of the hereinbefore mentioned governing codes and rules and not contrary to same.

1.8 MANUFACTURERS

A. Firms regularly engaged in the manufacture of the equipment specified of the types and capacities required, whose products have been in satisfactory use in similar service for not less than 5 years, unless specified otherwise.

1.9 INSTALLERS

A. A firm with at least 5 years of successful installation experience on projects with electrical work similar to that required for the project, unless specified otherwise.

1.10 SUBMITTALS

A. General: Provide submittals, shop drawings and descriptive data for selected items, and obtain Engineer's approval of same prior to proceeding with work.

B. Submittals shall include, but not be limited to, information on the following materials:
   1. Switchboard.
   2. Switchboard Circuit Breakers.
   3. Switchboard Customer Metering.
   4. Panelboard.

C. Submittals shall comply with the following:
   1. Include complete catalog information such as construction, ratings, and insulating systems, as applicable.
   2. For any material specified to meet U.L. or trade standards, furnish manufacturer's or vendor's certification that material furnished for work does in fact equal or exceed Specifications.
   3. Shop drawings shall be submitted in complete groups of material (i.e., all fixtures or all switchgear, panels, etc.), and each item of material submitted shall have Contractor's stamp and be initialed by Contractor as verification that submittal has been reviewed in detail and is in fact Contractor's choice of materials. Bind catalog cuts, descriptive bulletins, and drawings, 11" x 17" or smaller, in sets with covers showing titles. Contractor shall verify dimensions of equipment and be satisfied as to code compliance for fit prior to submitting shop drawings for approval. Departure from the above noted procedure would result in rejection of the submittal and the requirement that the Contractor revise and resubmit the information. Any costs associated with delays arising out of such resubmittal process shall be the sole responsibility of the Contractor.

1.11 O&M MANUALS

A. Submit three sets of Operation and Maintenance Manuals.

1.12 WARRANTIES

B. All new equipment shall have a warranty of one (1) year, including all parts and labor.

END OF SECTION

SECTION 16047 – ELECTRICAL IDENTIFICATION AND SIGNAGE

PART 1 - GENERAL

1.1 INDUSTRY STANDARDS

A. Current editions of publications of the following institutes, are referred to in this section.
   1. American National Standards Institutes, ANSI.

PART 2 - PRODUCTS

2.1 MATERIALS AND PRODUCTS

A. Nameplates: Engraved plastic laminate.
B. Letters of nameplates shall be white and a minimum of 3/16" high. Color of nameplate shall be black, unless otherwise noted or indicated; with stainless steel fasteners.
C. Wire/cable tags shall be self-adhesive wrap-around vinyl cloth; Brady, Ideal, or approved equal.

PART 3 - EXECUTION

3.1 NAMEPLATES

A. Provide engraved laminate nameplates on all of the following devices listing the equipment name, equipment controlled or served and the circuit number.
   1. Main fused switch or main circuit breaker.
   2. Control panels, variable frequency drives, motor starters and contactors.
   3. Branch circuit panels.
   4. Other major equipment and components.
B. On the inside of each box indicate the circuit number of the circuit serving the device by using a cable tag.
C. In pull boxes, and within switchboards, panelboards, motor starters, switches, etc. and at the equipment served by the circuit or feeder, on each cable of feeder circuits, and on each cable of all motor circuits, provide a cable tag identifying circuit number and phase.
D. All Instrument and Control wires and cables shall be similarly tagged as noted above.

END OF SECTION

SECTION 16110 - RACEWAYS, CONDUIT, AND BOXES FOR ELECTRICAL SYSTEMS

PART 1 - GENERAL

1.1 DESCRIPTION OF WORK

A. The work required under this section includes the provision, fabrication, and installation of all raceways and conduit required for this Work.

B. This section covers all conduit to be used on the various portions of the project and the Contractor shall meet the requirements of these Specifications wherever applicable.

1.2 QUALITY ASSURANCE

A. Manufacturers: Firms regularly engaged in manufacture of raceway systems of types and sizes required, whose products have been in satisfactory use in similar service, and whose products meet all requirements specified herein.

B. Installer: Qualified with successful installation experience on projects with electrical raceway work similar to that required for this project.

1. An experienced journeyman shall be in responsible charge of all raceway and conduit work.

C. NEMA Compliance: Comply with applicable NEMA standards pertaining to raceways.

D. UL Compliance and Labeling: Comply with provisions of UL safety standards pertaining to electrical raceway systems, and provide products and components, which have been UL-listed and labeled.

E. NEC Compliance: Comply with requirements as applicable to construction and installation of raceway systems.

1.3 SUBMITTALS

A. Shop drawing submittals shall be provided.

1.4 PRODUCT DELIVERY, STORAGE AND HANDLING

A. Provide end-cap thread protectors on exposed threads of threaded metal conduit.

B. Handle conduit and raceways carefully to prevent bending and end-damage and to avoid scoring finish.

C. Store conduit and tubing inside and protect from weather. When necessary to store outdoors, elevate well above grade and enclose with durable, watertight wrapping.

PART 2 - PRODUCT

2.1 GENERAL

A. For each electrical raceway system provide a complete assembly of conduit with all required fittings; including, but not necessarily limited to, connectors, nipples, couplings, elbows, expansion fittings, pull boxes and other components and accessories as needed to form a complete system.

B. Provide conduit, and raceway accessories including straps, hangers, angles, support chairs, etc. as required for a complete system.

2.2 LIQUIDTIGHT FLEXIBLE METAL CONDUIT

A. Liquid-tight flexible metal conduit shall comply with Fed. Spec. WW-C-566 and shall be minimum 3/4" trade size, U.L. listed, standard weight, flexible, galvanized zinc-coated and PVC jacketed steel conduit.
B. Fittings shall be designed for use with liquid-tight flexible steel conduit and shall maintain electrical continuity throughout fittings and conduit. Fittings shall comply with Fed. Spec. W-F-406, Type 1, Class 1, Style A.

2.3 RIGID ALUMINUM CONDUIT

A. Rigid aluminum conduit shall be 6063 alloy, T41 temper, complying with ANSI C80.5 and Fed. Spec. WW-C-540 and shall be UL 6 listed.
B. Elbows, bends, and similar offsets shall be made of full weight material complying with the above and shall be coated and threaded the same as conduit.
C. Threads for conduit, couplings, and fittings shall be full depth and clean cut.
D. Conduit shall be ¾" trade size or larger or as indicated on the drawings or as required for the application if not indicated, and shall be manufactured by VAW, or equal.
E. Rigid aluminum conduit fittings shall comply with Fed. Spec. FS W-F-408.
F. All couplings and fittings shall use threaded connections. Do not use any non-threaded fittings or connections.

2.4 RIGID METAL CONDUIT

A. Rigid metal conduit shall be mild steel, hot-dip-galvanized conduit complying with ANSI C80.1 and Fed. Spec. WW-C-581E and shall be U.L. listed.
B. Elbows, bends, and similar offsets shall be made of full weight material complying with the above and shall be coated and threaded the same as conduit.
C. Threads for conduit, couplings, and fittings shall be full depth and clean cut.
D. Conduit shall be 3/4" trade size or larger or as indicated on the drawings or as required for the application if not indicated, and shall be manufactured by National Electrical Products Company, Youngstown Steel and Tube Company, Republic Steel, Allied Steel Tube and Conduit Company, or equal.
E. Rigid metal conduit fittings shall comply with Fed. Spec. FS W-F-408.
F. All couplings and fittings shall use threaded connections. Do not use any non-threaded fittings or connections.

2.5 INTERMEDIATE METAL CONDUIT

A. Intermediate metal conduit shall be mild steel, hot-dip-galvanized conduit complying with ANSI C80.6 and Fed. Spec. WW-C-581E and shall be U.L. listed.
B. Elbows, bends, and similar offsets shall be made of full weight material complying with the above and shall be coated and threaded the same as conduit.
C. Threads for conduit, couplings, and fittings shall be full depth and clean cut.
D. Conduit shall be 3/4" trade size or larger or as indicated on the drawings or as required for the application if not indicated, and shall be manufactured by National Electrical Products Company, Youngstown Steel and Tube Company, Republic Steel, Allied Steel Tube and Conduit Company, or equal.
E. Intermediate metal conduit fittings shall comply with AA-50553 (replaces Fed. Spec.)
F. All couplings and fittings shall use threaded connections. Do not use any non-threaded fittings or connections.

2.6 ELECTRICAL METALLIC TUBING (EMT)

A. Electrical metallic tubing shall be mild steel, hot-dip-galvanized, complying with ANSI C80.1 and Fed. Spec. WW-C-581 and shall be U.L. listed.
B. Elbows, bends, and offsets shall be made from full weight material complying with the above and shall be coated the same as electrical metallic tubing. Use compression or set screw fittings.
C. All EMT fittings shall be steel. Cast fittings will not be allowed.
D. Electrical metallic tubing size shall be minimum ¾" trade size or as indicated on the Project Drawings and/or as specified herein.

2.7 RIGID NONMETALLIC CONDUIT

A. Electrical Plastic Conduit: NEMA Stds. Pub. No. TC2, Type 3, Schedules 40 or 80 as shown on drawings, for direct burial, manufactured from ASTM D1784 PVC in compliance with NEMA TC2. PVC conduit shall be UL listed. Joints shall be solvent cement types.
B. Provide PVC elbows, bends, fittings, and adapters as required for a complete installation. PVC conduit and tubing fittings shall comply with NEMA Stds. Pub. No. TC3, match to conduit/tubing type and material. Provide solvent cement as recommended by the conduit manufacturer.
C. Conduits turning up out of the ground shall have galvanized steel elbows and extensions.

PART 3 - EXECUTION

3.1 INSTALLATION - GENERAL

A. Install raceway products as indicated on the drawings and as required, in accordance with respective manufacturers written instructions, applicable requirements of the NEC and the National Electrical Contractors Association's "Standard of Installation", and in accordance with recognized industry practices, to ensure that products serve their intended function.
B. Conduit field joints shall be cut square and reamed smooth. Threads shall be cleanly cut and joints drawn up tight. No running threads will be permitted.
C. Offsets and bends shall be made carefully, without reducing cross sectional area, and shall not be less than the radius of standard elbows. Offsets for rigid nonmetallic conduit shall be made with an approved heating apparatus; open flame heating of the conduit shall not be allowed.
D. Conduits shall be supported from the structural system, not from ceilings, ductwork, piping systems or other non-structural items. Provide support for junction and pull boxes as required by the NEC.
E. Support single conduit runs by means of rods and hangers. Support multiple runs in a similar manner or use a common trapeze hanger or unistrut channel hanger as required for span and loading. Provide end caps for trapeze type hangers.
F. Conduits surface mounted on walls up to a height of 8' above the floor shall be supported by two-hole galvanized straps. Pinch type hangers may be used at heights greater than 8' above floor. Secure supports by means of toggle bolts, inserts, or expansion bolts.
G. All spare conduits shall have a poly pull-string installed and available at each end for future conductor installation.

H. Wherever possible, install horizontal raceway runs above water and steam piping.
I. All conduit runs shall be grounded in an effective and approved manner at point of origin and shall maintain a continuous ground throughout all runs, cabinets, pull boxes, and fittings from the point of service to all outlets.
J. All runs shall be completed and cleaned and free from foreign matter inside before the conductors are drawn in. During the installation, conduit ends are to be plugged or capped to prevent the entrance of foreign materials.
K. Conduit supports shall be spaced in accordance with the NEC.
L. Conduit fittings shall be made for the respective conduit type and shall be used as required to keep conduit as close as practical to the surface or structure to which conduit is mounted.
M. Coordinate with other work as necessary to interface installation of electrical raceways and components with other work.
N. Level and square raceway runs, and install at proper elevations/heights.

3.2 RACEWAY USAGE

A. For this project, all above ground conduits shall be rigid aluminum, and all below ground conduits shall be schedule 80 PVC type. Elbow transitions shall be galvanized rigid steel.
B. Coat aluminum conduits where in contact with earth or concrete.

3.3 SEISMIC REQUIREMENTS

A. Raceway installation for the work shall meet all applicable code seismic requirements.

END OF SECTION

SECTION 16120 – WIRES AND CONNECTORS

PART 1 - GENERAL

1.1 DESCRIPTION OF WORK

A. Extent of electrical wire and cable work is indicated by the project drawings.
B. Types of wire, cable and connectors specified in this section include the following:
   1. 600-volt insulated Copper conductors.
   2. Fixture wires.
   3. Tap-type connectors.
   4. Mechanical and compression connectors.
   5. Twist-on insulated metal spring connectors.
C. Signal, instrumentation, and control type wire and cable products are not part of this Section.
D. Applications of electrical wire, cable, and connectors required for project are as follows:
   1. For power distribution circuitry.
   2. For branch-circuit appliances and equipment.
   3. For control circuits.

1.2 QUALITY ASSURANCE

A. Manufacturers: Firms regularly engaged in manufacture of electrical wire and cable products of types, sizes, and ratings required, whose products have been in satisfactory use in similar service for not less than three (3) years.
B. Installer's Qualifications: Firm with at least three (3) years of successful installation experience with projects utilizing electrical wiring and cabling work similar to those required for project.
C. NEC Compliance: Comply with NEC requirements as applicable to construction, installation; and color coding of electrical wires and cable.
D. UL Compliance: Comply with applicable requirements of UL Std. 83, "Thermoplastic-Insulated Wires and Cables", and Std 486A, "Wire Connectors and Soldering Lugs for Use with Copper Conductors," except where manufacturer's torque-tightening requirements are more stringent.
E. UL Labels: Provide wiring/cabling and connector products that are UL listed and labeled.
F. NEMA/ICEA Compliance: Comply with NEMA/ICEA Std Pub/No.`s WC 5, "Thermoplastic-Insulated Wire and Cable for the Transmission and Distribution of Electrical Energy," and WC-30, "Color Coding of Wires and Cables," pertaining to electrical-power-type wires and cables.
G. IEEE Compliance: Comply with applicable requirements of Std 241, "IEEE Recommended Practice for Electric Power Systems in Commercial Buildings" pertaining to wiring systems.
H. ASTM Compliance: Comply with applicable requirements of ASTM B1, 2, 3, 8 and D-753. Provide copper conductors with conductivity of not less than 98% at 20 Deg.C.(68 Deg. F.).

1.3 STANDARDS

A. All materials shall be new, manufactured in accordance with latest edition of UL, NEMA, ANSI, and IPCEA.
B. All cables furnished shall be of same type and by same manufacturer. All accessories of a particular type shall be by the same manufacturer.

1.4 SUBMITTALS

A. Submit shop drawings for wire, connectors, and related products.

1.5 DELIVERY, STORAGE, AND HANDLING

A. Deliver wire and cable properly packaged in factory-fabricated type containers, or wound on NEMA-specified type non-returnable wire and cable reels.

B. Store wire and cable in clean, dry space in original containers. Protect products from weather, damaging fumes, construction debris and traffic.

C. Handle wire and cable carefully to avoid abrading, puncturing, or tearing wire and cable insulation and sheathing. Ensure that dielectric resistance integrity of wires/cables is maintained.

PART 2 - PRODUCTS

2.1 ACCEPTABLE MANUFACTURERS

A. Available Manufacturers: Subject to compliance with requirements, manufacturers offering products that may be incorporated in the work include, but are not limited to, the following:

1. Wire and Cable:
    a. American Insulated Wire Corp.
    b. Brand-Rex Div; Pyle National Co.
    c. Cerro Wire and Cable Co.
    d. Hitemp Wires, Inc.
    e. Phelps Dodge Cable and Wire Co.
    f. Pirelli Cable Corp.
    g. Rome Cable Corp.
    h. Southwire Company.
2. Connectors:
    a. AMP, Inc.
    b. Burndy Corporation
    c. Brand-Rex Div., Pyle National Co.
    d. General Electric Co.
    e. 3M Company
    f. 0-Z/Gedney Co.
    g. Square D Company
    h. Thomas and Betts Corp.

2.2 WIRES, CABLES AND CONNECTORS

A. General: Provide electrical wires, cables and connectors of manufacturer's standard materials, as indicated by published product information; designed and constructed as recommended by manufacturer, for a complete installation, and for application indicated.

B. Except as otherwise indicated, provide copper conductors with conductivity of not less than 98% at 20 Deg. C (68 Deg. F).

C. Building Wires: Provide factory-fabricated wire of sizes, ampacity ratings, and materials for applications and services indicated. Where not indicated, provide proper selection as determined by Installer to comply with project requirements, NEC and NEMA standards. Select from the following UL types, those wires with construction features which fulfill project requirements. Conductors shall be annealed copper.

1. Type THWN-THHN: For dry and wet locations; max dry location operating temperature 90 Deg. C. Insulation shall be flame-retardant, moisture-resistant and heat-resistant thermoplastic; outer covering shall be nylon jacket.
    a. Apply conductors at 75 deg. C. ampere rating for circuits greater than 100 amperes. Use 60 deg. C. ampere rating for circuits 100A or less.

2.3 CONNECTORS

A. General: Provide UL-type factory-fabricated, metal connectors of sizes, ampacity ratings, material, types and classes for applications and for services indicated. Where not indicated, provide proper selection as determined by Installer to comply with installation requirements, NEC and NEMA standards. Ensure connector materials mate and match and are compatible with conductor materials and cables. Select from the following types:
    1. Type: Insulated mechanical-bolted parallel or compression type for feeders and generator circuits; twist-on insulated metal spring connectors for #12 and #10 awg miscellaneous branch circuit wiring, including equipment ground conductors.
    2. Material: Copper (for Cu to Cu connection).
    3. Insulation: All connectors shall be fully insulated to match insulation type and rating of conductors being spliced.

PART 3 - EXECUTION

3.1 INSTALLATION OF WIRES AND CABLES

A. General: Install electrical cables, wires and wiring connectors as indicated, in compliance with applicable requirements of NEC, NEMA, UL, and NECA's "Standard of Installation," and in accordance with recognized industry practices.
B. Coordinate wire/cable installation with electrical raceway and equipment installation work, as necessary.
C. Install all wiring in conduit.
D. Pull conductors together where more than one is being installed in a raceway.
E. Use pulling compound or lubricant, where necessary. Compound must not deteriorate conductor or insulation. Use of soap is not permitted as a pulling lubricant.
F. Use pulling means, including fish tape, cable, rope and basket-weave wire/cable grips that will not damage cables or raceway.
G. Keep conductor splices to a minimum.
H. Install splices and tapes that possess equivalent-or-better mechanical strength, electrical ampacity, and insulation ratings than conductor being spliced.
    1. Use heat-shrink or cold-shrink splice kits for feeder circuit splices.
I. Use splice and tap connectors that are compatible with conductor material.
J. Tighten electrical connectors and terminals, including screws and bolts, in accordance with manufacturer's published torque tightening values. Where manufacturer's torquing requirements are not indicated, tighten connectors and terminals to comply with tightening torques specified in UL Std 486A.
K. Use twist-on insulated metal spring connectors for #14 control and #12 and #10 AWG branch circuit wiring, including equipment ground conductors.
L. Aluminum conductors are not allowed.

3.2 FIELD QUALITY CONTROL

A. Prior to energizing circuitry, check installed service and feeder wires and cables with megohm meter to determine insulation resistance levels, to ensure insulation integrity.
B. Prior to energizing, test wires and cables for electrical continuity and for short-circuits. Test branch circuit wiring with ohmmeter.
C. Subsequent to wire and cable hook-ups, energize circuitry and demonstrate functioning in accordance with requirements. Where necessary, replace faulty conductors and retest to demonstrate compliance.
D. Ensure correct rotation of all motors.
E. Ensure correct sequence of phases at all switchgear and panelboards. Phase-sequence testing shall be performed in the presence of the Owner and Engineer, on both high-voltage and low-voltage systems, on both existing and new equipment. Ensure all phases of all circuits are identified. Ensure proper rotation of all motors. Ensure phase sequence of tie circuit(s) and both sides of secondary unit substation are exactly the same (as applicable). Provide A-B-C phase arrangement, left-to-right, top-to-bottom.

END OF SECTION

SECTION 16124 - INSTRUMENTATION CABLES

PART 1 - GENERAL

1.1 DESCRIPTION

A. Scope:

1. CONTRACTOR shall provide all labor, materials, equipment and incidentals as shown, specified and required to furnish and install instrumentation cable. The types of cable include the following:
   a. Shielded and Jacketed Instrument Cable.

1.2 SUBMITTALS

A. Shop Drawings: Submit for approval the following:

1. Manufacturer's technical information for instrumentation cable proposed for use.

PART 2 - PRODUCTS

2.1 MATERIALS

A. Single Shielded Pair Instrument Cable:
   1. Tinned copper, polyethylene insulated, stranded conductors, No. 16 AWG minimum, twisted with aluminum-polyester shield, stranded tinned No. 18 AWG copper drain wire and overall chrome PVC jacket. Rated for 600 volts minimum.
   2. Manufacturer: Provide one of the following:
      a. Belden 8719
      b. Or approved equal.

B. Multipaired Shielded Instrument Cable:
   1. Tinned copper, 7 strand insulated conductors, No. 16 AWG minimum, twisted in pairs with aluminum-mylar shield over each pair, silicone rubber fiberglass fire barrier tape, tinned copper drain wire, aluminum mylar overall shield, outer jacket.
   2. Manufacturer: Provide one of the following:
      a. Belden Company
      b. Okonite Company.
      c. Dekoron Wire and Cable Company.
      d. Or approved equal.

C. Multiconductor Shielded Instrument Cable:
   1. Tinned copper, stranded conductors, No. 16 AWG minimum, with overall aluminum-polyester shield with 85 percent tinned copper braid shield and overall teflon jacket.
   2. Manufacturer: Provide one of the following:
      a. Belden Company.
      b. Okonite Company.
      c. Or approved equal.

D. Cable Terminals:
   1. Fork type copper compression terminals with nylon insulation for termination of cable at all terminal blocks.
   2. Product and Manufacturer: Provide one of the following:

a. T&B Sta-Kon.
b. Burndy Insulug.
c. Or approved equal.

PART 3 - EXECUTION

3.1 INSTALLATION

A. Install all cable complete with proper terminations at both ends.
B. Install instrumentation cables in conduit separate from power and control cables unless otherwise noted.
C. Ground the shield on shielded cables at one end only and as recommended by instrument manufacturer.
D. Identify all conductors in accordance with electrical identification specifications.
E. Install and terminate vendor furnished cable in accordance with vendor equipment requirements and cable manufacturer's specific recommendations.
F. Install in conformance with the National Electrical Code.

3.2 TESTING

A. Test shielded instrumentation cable shields with an ohmmeter for continuity along the full length of the cable and for shield continuity to ground.
B. Connect shielded instrumentation cables to a calibrated 4-20 milliamp DC signal transmitter and receiver. Test at 4, 12, and 20 milliamp transmitter settings.
C. Any cable which fails any test or when used under full load conditions shall be replaced with a new cable for the full length.

END OF SECTION

SECTION 16143 - WIRING DEVICES

PART 1 – GENERAL

1.1 DESCRIPTION OF WORK

A. The extent of wiring device work is indicated by drawings. Wiring devices are defined as single discrete units of electrical distribution systems which are intended to carry but not utilize electric energy.

B. Types of electrical wiring devices in this section include the following:
   1. GFCI type receptacles.
   2. Weatherproof GFCI type receptacles.
   3. Weatherproof toggle switches.
   4. Other wiring devices as noted on drawings.

1.2 QUALITY ASSURANCE

A. NEC Compliance: Comply with NEC as applicable to installation and wiring devices.

B. UL Compliance: Comply with applicable requirements of UL 20, "General-Use Snap Switches"; 486A "Wire Connectors and Soldering Lugs for Use with Copper Conductors"; 498, "Electrical Attachment Plugs and Receptacles"; and 943, "Ground Fault Circuit Interrupters" pertaining to installation of wiring devices. Provide wiring devices which are UL-listed and labeled.

C. NEMA Compliance: Comply with applicable portions of NEMA Stds Pub/ No. WD 1, General-Purpose Wiring Devices", WD 2, "Semiconductor Dimmers for Incandescent Lamps", and WD 5, "Specific-Purpose Wiring Devices".

PART 2 - PRODUCTS

2.1 MANUFACTURERS

A. Subject to compliance with requirements, manufacturers offering wiring devices which may be incorporated in the work include, but are not limited to, the following:
   1. Hubbell Inc.
   2. Arrow-Hart
   3. Pass & Seymour.
   4. Leviton.
   5. Eagle.
   6. Crouse Hinds
   7. Appleton
   8. Killark
   9. Or approved equal.

2.2 FABRICATED WIRING DEVICES

A. General: Provide factory-fabricated wiring devices, in types, colors, and electrical ratings for applications indicated and which comply with NEMA Stds. Pub No. WD 1.

2.3 RECEPTACLES

A. Ground-Fault Circuit Interrupters: Provide "feed-through" type ground-fault circuit interrupters, with heavy-duty duplex receptacles, capable of protecting connected downstream receptacles on single circuit, and of being installed in a 2-3/4" deep outlet box without adapter, grounding type UL-rated Class A, Group 1, rated 20-amperes, 120 volts, 60 Hz; with solid-state ground-fault sensing and signaling; with 5 milliamperes ground-fault trip level; equip with NEMA 5-20R configuration; side screw wiring terminals. Similar to Hubbell #GF5362.
B. All receptacles shall be installed with the ground in the DOWN position, if receptacle is oriented vertically.
C. All receptacles installed outdoors shall be GFCI / Weather-Resistant type with In-Use cover.

PART 3 - EXECUTION

3.1 INSTALLATION OF WIRING DEVICES

A. Install wiring devices as indicated, in accordance with manufacturer's written instruction, applicable requirements of NEC and NECA's "Standard of Installation", and in accordance with recognized industry practices to fulfill project requirements.
B. Coordinate with other work, including painting, electrical boxes and wiring work, as necessary to interface installation of wiring devices with other work.
C. Install wiring devices only in electrical boxes, which are clean; free from excess building material, dirt, and debris.
D. Install wiring devices after wiring pull-in work is completed.
E. Tighten connectors and terminals, including screws and bolts, in accordance with equipment manufacturer's published torque tightening values for wiring devices. Where manufacturer's torquing requirements are not indicated, tighten connectors and terminals to comply with tightening torques specified in UL Stds 486A. Use properly scaled torque indicating hand tool.
F. Devices installed outdoors shall be installed in FD/FS style cast aluminum outlet boxes.
G. Provide devices rated for the classification as noted on the drawing and properly seal (seal-off) device as required by the NEC.

3.2 PROTECTION OF WALL PLATES AND RECEPTACLES

A. At time of Substantial Completion, replace those items which have been damaged, including those burned and scored by faulty plugs.

3.3 GROUNDING

A. Provide equipment grounding conductor and connection for wiring devices, unless otherwise indicated. Tighten connection to comply with tightening torques specified in US Std 486A to assure permanent and effective grounds. Grounding continuity shall be maintained between devices and metallic raceway system.

3.4 TESTING

A. Prior to energizing circuitry, test wiring devices for electrical continuity and short-circuits. Ensure proper polarity of connections is maintained. Subsequent to energization, test wiring devices to demonstrate compliance with requirements, by use of a Woodhead or equal continuity testing device.

3.5 IDENTIFICATION

A. Mark the panelboard name and circuit # to which the device is connected, on each circuit wire, using phenolic tags.

END OF SECTION

SECTION 16450 - GROUNDING SYSTEMS

PART 1 - GENERAL

1.1 SUMMARY

A. Extent of electrical grounding and bonding work is indicated by drawings as specified herein. Grounding and bonding work is defined to encompass systems, circuits, and equipment.

B. Refer to other Division 16 sections for wires/cables, electrical raceways, boxes and fittings, and wiring devices which are required in conjunction with electrical grounding and bonding work; not work of this section.

C. The electrical service will be 1 Phase, 3 Wire, 120/240v, an equipment ground conductor shall be installed in all conduits on load side of main disconnect (load side of neutral-to-ground bond location).

PART 2 - PRODUCTS

2.1 MANUFACTURERS

A. Manufacturers: Subject to compliance with requirements, provide grounding and bonding products of one of the following (for each type of product):

1. Burndy Corporation.
2. Cadweld Div.; Erico Products Inc.
3. Crouse-Hinds Div.; Cooper Industries.
4. Ideal Industries, Inc.
5. Joslyn Corporation.
6. Okonite Company.
7. OZ Gedney Div.; General Signal Corp.
8. Thomas and Betts Corp.

2.2 GROUNDING AND BONDING

A. General: Except as otherwise indicated, provide electrical grounding and bonding systems; with assembly of materials, including, but not limited to, wires, connectors, solderless lug terminals, grounding electrodes bonding jumper braid, and additional accessories needed for a complete installation. Where more than one type component product meets indicated requirements, selection is Installer's option. Where materials or components are not indicated, provide products which comply with NEC, UL, NEMA, IEEE requirements, and with established industry standards for those applications indicated.

B. Conductors: Unless otherwise indicated, provide electrical grounding conductors for grounding system connections that match building wiring materials and are sized according to NEC.

C. Electrical Grounding Connection Accessories: Provide electrical insulating tape, heat-shrinkable insulating tubing, welding materials, bonding straps, as recommended by accessories manufacturers for type service indicated.

D. Field Welding: Comply with AWS Code for procedures, appearance, and quality of welds; and for methods used in correcting welding work. Provide exothermic type or equal welded connections where grounding conductors connect to underground grounding

electrodes and underground or under slab or encased metal structural components.

PART 3 - EXECUTION

3.1 INSTALLATION OF ELECTRICAL GROUNDING AND BONDING SYSTEMS

A. General: Install electrical grounding and bonding systems as indicated, in accordance with manufacturer's instructions and applicable portions of NEC, NECA's "Standard of Installation", and in accordance with recognized industry practices to ensure that installations comply with requirements.

B. Coordinate with other work as necessary to interface installation of electrical grounding and bonding system.

C. Weld grounding conductors to underground grounding electrodes.

D. Connect together by equipment ground conductors and bonding, service equipment enclosures, exposed noncurrent carrying metal parts of electrical equipment, metal raceway systems, grounding conductor in raceways and cables, equipment frames, structural steel.

E. The antenna tower ground rod for lightning protection shall be bonded to the electrical ground rod system provided for the electrical service.

F. Terminate feeder and branch circuit insulated equipment grounding conductors with grounding lug.

1. All feeder and branch circuits shall have a green insulated equipment ground conductor. (Ground conductors may not be indicated on plans, but shall be provided).

G. Tighten grounding and bonding connectors and terminals, including screws and bolts, in accordance with manufacturer's published torque values for connectors and bolts. Where manufacturer's torquing requirements are not indicated, tighten connections to comply with tightening torque values specified in UL 486A to ensure permanent and effective grounding.

H. Route grounding connections and conductors to ground and protective devices in shortest and straightest paths as possible to minimize transient voltage rises.

I. Apply corrosion-resistant finish to field-connections, buried metallic grounding and bonding products, and places where factory applied protective coatings have been destroyed, which are subjected to corrosive action.

3.2 FIELD QUALITY CONTROL

A. Upon completion of installation of electrical grounding and bonding systems, test ground resistance with ground resistance tester. Where tests show resistance-to-ground is over 5 ohms, take appropriate action to reduce resistance to 5 ohms or less, by driving additional ground rods; then retest to demonstrate compliance.

B. Use ohmmeter and test for continuity of all ground conductors, all metallic raceways and enclosures, metallic building structure, and metallic piping.

END OF SECTION

SECTION 16470 - PANELBOARDS

PART 1 - GENERAL

1.1 DESCRIPTION OF WORK

A. Extent of panelboard, and enclosure work is indicated by drawings and schedules.

B. Types of panelboards and enclosures in this section include the following:

1. 480V or 277/480V Power-Distribution Panelboards.
2. 120/240V or 120/208V Panelboards.

1.2 QUALITY ASSURANCE

A. Manufacturers: Firms regularly engaged in manufacture of panelboards and enclosures, of types, sizes, and ratings required, whose products have been in satisfactory use in similar service for not less than 3 years.

B. Installer's Qualifications: A firm with at least 3 years of successful installation experience on projects utilizing panelboards similar to those required for this project.

C. NEC Compliance: Comply with NEC as applicable to installation of panelboards, cabinets, and cutout boxes, including NEC Article 408.30-58, 550.11-12.

D. UL Compliance: Comply with applicable requirements of Std No. 67, "Electric Panelboards", and Std No.'s 50, 869, 486A, and 1053 pertaining to panelboards, accessories and enclosures. Provide units, which are UL-listed and labeled.

E. NEMA Compliance: Comply with NEMA Stds. Pub/No, 250, "Enclosures for Electrical Equipment (1000 Volts Maximum)", Pub/No. PB 1, "Panelboards", and Pub/No. PB 1.1, "Instructions for Safe Installation, Operation and Maintenance of Panelboards Rated 600 Volts or Less." Comply with NEMA Pub. No. PB1.2 , "Application Guide for Ground-fault Protective Devices for Equipment", where applicable.

1.3 SUBMITTALS

A. Product Data: Submit manufacturer's data on panelboards.

PART 2 - PRODUCTS

2.1 ACCEPTABLE MANUFACTURERS

A. Available Manufacturers: Subject to compliance with requirements, manufacturers offering electrical panelboard products, which may be incorporated in the work, include the following:

1. Eaton/Cutler-Hammer.
2. Square D Company.
3. Siemens
4. Or approved equal

2.2 PANELBOARDS

A. General: Except as otherwise indicated, provide panelboards, enclosures and ancillary components, of types, sizes, and ratings indicated, which comply with manufacturer's standard materials, except copper busbars, copper neutral bar, copper ground bar, and

copper cable lugs shall be provided; design and construct in accordance with published product information; equip with proper number of unitary branch devices as required for complete installation. Refer to panelboard schedules or one-line drawings.

B. 480V Power Distribution Panelboards: Provide dead-front safety type power distribution panelboards as indicated, with panelboard protective devices in quantities, ratings, types and with arrangement shown; with copper anti-burn solderless pressure type main lug connectors approved for copper conductors. Equip with copper bus bars, with not less than 98% conductivity, and with full-sized copper neutral bus insulated from ground; and with copper ground busbar in each section; provide suitable copper lugs on neutral bus for outgoing feeders requiring neutral connections. Provide bolt-in main circuit breaker and bolt-in branch circuit breakers for each circuit, with toggle handles that indicate when tripped. Where multiple-pole breakers are indicated, provide with common trip so overload on one pole will trip all poles simultaneously. Enclosures shall be fabricated by the same manufacturer as panelboard, and shall mate properly with panelboards.
    1. Ratings of panelboards shall be as indicated on drawings.
    2. Panelboards shall be UL listed for service entrance where indicated on the drawings.
    3. Panelboards shall be single or of multiple sections as indicated.
    4. Panelboards shall have indicated short circuit rating, or 65,000 AIC rating minimum if not indicated on drawings.
    5. Main circuit breaker shall be bolt-in, molded case, electronic type, with adjustable trip and time delay settings; adjustable short-time pick-up and time delay; adjustable long-time pick-up and time delay.
    6. Short-circuit rating of all circuit breakers shall match or exceed rating of panelboard as indicated on drawings, or not less than 65,000 AIC if not indicated.
    7. Provide bolt-in standard thermal magnetic circuit breakers for branch/feeder circuit breakers.
    8. Provide GFI protection if indicated, with adjustable set-point and time delay.

C. Branch Circuit Lighting and Appliance Panelboards: Provide dead-front safety type lighting and appliance branch circuit panelboards as indicated, with branch devices in quantities, ratings, types and arrangement shown; with copper anti-burn solderless pressure type lug connectors approved for copper conductors; equip with copper bus bars, full-sized copper neutral bar insulated from ground, copper ground bar, and bolt-in molded-case circuit-breakers, with toggle handles that indicate when tripped. Where multiple-pole breakers are indicated, provide with common trip so that all poles trip simultaneously. Provide suitable copper lugs on neutral bus for each outgoing circuit required; provide bare uninsulated copper grounding bars suitable for bolting to enclosures. Select enclosures fabricated by the same manufacturer as panelboards, which mate properly with panelboards.
    1. Provide short circuit rating indicated on drawings, but not less than 25,000 AIC if not indicated.

D. Panelboard Enclosures: Provide galvanized sheet steel cabinet enclosures, in sizes required and NEMA types as indicated, code-gauge, minimum 16-gauge thickness. Construct with multiple knockouts and wiring gutters. Provide fronts with adjustable trim clamps, and doors with flush locks and keys; all panelboard enclosures shall be keyed alike, with concealed door hinges. Equip with interior circuit-directory frame, and card with clear plastic covering. Provide baked gray enamel finish over a rust inhibitor coating. Design

enclosures for recessed or surface mounting, as applicable. Provide enclosures, which are fabricated by the same manufacturer as the panelboards and which mate properly with the panelboards to be enclosed.

E. Provide Integral Surge Protection device in all panelboards.

PART 3 - EXECUTION

3.1 INSTALLATION OF PANELBOARDS

A. General: Install panelboards and enclosures as indicated, in accordance with manufacturer`s written instructions, applicable requirements of NEC standards and NECA's "Standard of Installation", and in compliance with standard recognized industry practices to ensure that products fulfill requirements.

B. Coordinate installation of panelboards and enclosures with wire and raceway installation work. Coordinate exact locations with other trades to ensure no space conflicts and no transgressions of dedicated panelboard space by piping and ductwork.

C. Tighten connectors and terminals, including screws and bolts, in accordance with equipment manufacturer's published torque tightening values for equipment connectors. Where manufacturer's torque requirements are not indicated, tighten connectors and terminals to comply with tightening torques specified in UL Stds 486A. Where manufacturer's torque requirements are more stringent, manufacturer's requirements shall be followed.

D. Anchor enclosures firmly to walls and structural surfaces, ensuring that they are permanently and mechanically secure. Use unistrut type channels for mounting to exterior walls where moisture contamination may be possible.

E. Provide properly wired electrical connections within enclosures. Wiring must be neatly routed, with wire management means installed as required for a neat and professional final appearance.

F. Fill in panelboard's circuit directory card upon completion of installation work. Directory cards shall be typed and 8-1/2” x 11” copies shall be provided as part of the O & M Manual.

G. Set adjustable circuit breaker trip and time-delay settings where applicable and as indicated by the short-circuit study calculations.

3.2 GROUNDING

A. Provide equipment grounding connection for panelboards as indicated. All panelboard feeders and branch circuits shall have green insulated equipment ground conductors, or conductors identified with green phasing tape (no. 6 awg and larger). Tighten connections to comply with tightening torques specified in UL Stds 486A, to assure permanent and effective grounds.

3.3 FIELD QUALITY CONTROL

A. Prior to energizing of circuitry, check tightness of all accessible connections for compliance with manufacturer's tightening torque specifications.

B. Prior to energizing panelboards, check panelboard busbar and feeder phase-to-phase, and phase-to-ground insulation resistance levels to ensure no ground-faults and no short-circuits exist.

C. Prior to energizing, check branch circuit panelboards for electrical continuity of circuits, and check for short-circuits and ground-faults.
D. Subsequent to wire and cable hook-ups, energize panelboards and demonstrate compliance with requirements. Where necessary, correct malfunctions and replace faulty components in the field, and then re-test to demonstrate compliance.
E. Provide “Brady” type numbered wire tags to identify all circuits.
F. Check for proper phase arrangement and rotation; A-B-C left-to-right and top-to-bottom.
G. Identify feeder circuit with color coding.

END OF SECTION

SECTION 16485 – DISCONNECT SWITCHES

PART 1 - GENERAL

1.1 DESCRIPTION OF WORK

A. Extent of disconnect switch work and applications are indicated on the drawings.
B. Applications of for the project include service entrance equipment.
C. Types of enclosed circuit breakers for this project:
   1. Heavy duty 240 VAC, 2-pole, Fused, 65000 kAIC short circuit rating, NEMA 4X enclosure construction, UL listed for service entrance applications.

1.2 QUALITY ASSURANCE

A. Disconnect Switches shall be UL listed.

PART 2 - PRODUCTS

2.1 ENCLOSED CIRCUIT BREAKERS

A. All current-carrying parts external to circuit breaker shall be plated to resist corrosion and promote cool operation. Lugs shall be aluminum/copper and shall be front-removable and UL listed for 75 degrees C copper conductors.
B. Operating mechanism shall be quick-make, quick-break, with handle that is pad-lockable in the "OFF" position. The handle position shall indicate whether the switch is "ON" or "OFF".
C. Enclosure shall be suitable for the environment in which it is installed; NEMA 4X outdoor weatherproof for this project.
D. Enclosure door shall have door interlock, with defeat mechanism, which prevents the door from opening when the circuit breaker is “ON”.
E. Fuses shall be Class J, Current Limiting Type.
F. Ampere rating shall be as indicated on the drawings, or if not indicated as required for the circuit.
G. Disconnect Switches used for service entrances shall be UL listed for service entrance applications, and shall have grounding provisions for service grounding and bonding.

2.2 MANUFACTURERS

A. Manufacturers:
   1. Cutler Hammer.
   2. Square D Company.
   3. Siemens.
   4. Or approved equal.

PART 3 - EXECUTION

3.1 INSTALLATION

A. Install disconnect switches where indicated on drawings, with ratings indicated.
B. Install securely to mounting frame indicated on drawing and provide all necessary brackets,

anchors, unistrut channels, and hardware.

C. Terminate all conductors including equipment grounding conductor.
D. Test operating mechanism to ensure smooth mechanical operation.

END OF SECTION

SECTION 16500 - INTERIOR LIGHTING

PART 1 - GENERAL

1.1 DESCRIPTION OF WORK

A. Extent of interior lighting fixture work is indicated by drawings and schedules.

1.2 QUALITY ASSURANCE

A. Manufacturers: Firms regularly engaged in manufacture of interior lighting fixtures of types and ratings required, whose products have been in satisfactory use in similar service for not less than 3 years.
B. Installer: Qualified with at least 3 years of successful installation experience on projects with interior lighting fixture work similar to that required for project.
C. NEC Compliance: Comply with NEC as applicable to installation and construction of interior building lighting fixtures.
D. NEMA Compliance: Comply with applicable requirements of NEMA Std. Pub. Nos. LE 1 and LE 2 pertaining to lighting equipment.
E. UL Compliance: Provide interior lighting fixtures which have been UL-listed and labeled. Fixtures shall comply with UL 57, 676, 1570, 1571, and 1572 where applicable.
F. CBM Label: Provide fluorescent-lamp ballasts which comply with Certified Ballast Manufacturers Association standards and carry the CBM label.
G. UL Standard 8750 “Light Emitting Diode Equipment for Use in Lighting Products”, IES Standard LM-79 “Electrical and Photometric Measurements of Solid-State Lighting Products”, IES Standard LM-80 “Measuring Lumen Maintenance of LED Light Sources”, and IES Standard TM-21 “Projecting Long Term Lumen Maintenance of LED Light Sources”.
H. ANSI C78.377 “Specifications for the Chromaticity of Solid State Lighting Products” with LEDs binned within a maximum three-step MacAdam Ellipse to ensure color consistency amongst luminaries of the same type.

1.3 SUBMITTALS

A. Product Data: Submit manufacturer's data on interior building lighting fixtures.

1.4 LED FIXTURES WARRANTY

A. For LED fixtures, lamps, drivers, and components, provide a complete warranty for parts and labor for a minimum of five years from the date of Substantial Completion.

1.5 LED DRIVERS WARRANTY

A. Furnish LED driver manufacturer’s warranties. The warranty period shall be not be less than 5 years from the date placed in service and energized. The warranty shall state that the malfunctioning driver shall be exchanged by the manufacturer and promptly shipped to the using facility. The replacement driver shall be identified to, or improvement upon, the original design of the malfunctioning driver.

1.6 LED MODULE WARRANTY

A. Furnish LED modules' warranties, either from OEM vendor or LED fixture manufacturer. The warranty period shall not be less than 5 years from the years from the date place in service and energized. The warranty shall state that the malfunctioning module shall be exchanged by the manufacturer and promptly shipped to the using facility.
B. The module OEM vendor or fixture manufacturer shall have the capability to provide replacement modules which shall match the light output (within 5%) and light color (within 2 McAdam ellipses) of identical products currently in service at the time of module replacement.

PART 2 - PRODUCTS

2.1 ACCEPTABLE MANUFACTURERS

A. Available Manufacturers: Subject to compliance with requirements, manufacturers offering products which may be incorporated in the work are listed on fixture schedule.
B. Alternate Manufacturers: Identification by means of manufacturers' names and catalog numbers is to establish basic features and performance standards. Any substitutions must meet or exceed these standards, including physical size dimensions.

2.2 INTERIOR LIGHTING FIXTURES

A. General: Provide lighting fixtures, of sizes, types and ratings indicated; complete with, but not necessarily limited to, housing, lamps, lamp holders, reflectors, ballasts, and wiring.
B. A-Lamp Fixtures: UL listed, equipped with porcelain lamp holder for A-lamps, equipped with thermal cutout switches in accordance with NEC regulations, and shall be complete with all accessories and trim pieces; wattage rating shall not be less than indicated, although lamp wattage indicated may be less than fixture rating. All bulbs shall be LED type.

2.3 LED DRIVERS

A. Provide drivers for LED lamps that are suitable for the electrical characteristics of the supply circuits to which they are to be connected, and which are suitable for operating the specified lamps. Provide drivers which, unless specifically indicated to the contrary or are not available for the specified LED source, have the following characteristics:
    1. Constant Current/Voltage power factor .90 or higher
    2. total harmonic distortion less than 20%
    3. lamp current crest factors no higher than 1.7
    4. Sound Rating A
    5. Class 2 protection
B. Digital Addressable dimming drivers, where specified in support of a digitally-addressable lighting control system, shall conform to the following requirements, unless otherwise noted:
    1. Drivers shall operate as an Addressable Dimming Ballast per Dali, Lutron EcoSystem or other specified digital lighting control protocol.
    2. Continuous dimming from 100% to 1% relative light output for LED lamps.
    3. Monitor and report lamp and driver status to central lighting control system.
    4. Drivers shall start at any dimming level without flashing to full bright.

5. Unique internal reference number shall be visibly displayed on ballast cover.

C. Provide drivers conforming to UL, and ANSI specifications and displaying labels or symbols of approval by the UL, and of certification by the CBM. Design, fabricate and assemble component parts of drivers in accordance with the latest requirements of the NEC. Mark drivers “Class 2” indicating approved integral driver protection. This driver protection is provided by a built-in self-resetting thermally actuated device that will remove the driver from line when excessive driver temperature is reached.

D. Rigidly mount drivers, unless specifically indicated to the contrary, to the inside of the top of the fixture housing, with driver surfaces and housing in complete contact for efficient conduction of driver heat. Permanently affix driver mounting screws to the fixture housing. Provide only fixtures whose design, fabrication, and assembly prevent overheating or cycling of lamps and drivers under any condition of use.

E. Dimming drivers shall be compatible with the control protocol of the lighting control system to which they are connected. Bring any conflicts to the attention of the Architect.

F. Provide identical drivers within each fixture type.

G. Provide drivers having the lowest sound-rating available for the lamps specified and clearly showing their respective sound ratings. Replace drivers found by Architect or Engineer to be unduly noisy, without charge, prior to acceptance of the job. Inform Architect in writing if drivers with a sound rating other than A are to be provided.

H. Wherever drivers are used outside a heated environment provide drivers capable of system operation at any temperature down to 0 degrees F.

I. Approved Driver Manufacturers
Advance
General Electric
Hatch
Lightech (GE)
Lutron
Sylvania (Osram)

PART 3 - EXECUTION

3.1 INSTALLATION OF INTERIOR LIGHTING FIXTURES

A. Install interior lighting fixtures at locations and heights as indicated, in accordance with fixture manufacturer's written instruction, applicable requirements of NEC, NECA's "Standard of Installation", NEMA standards, and with recognized industry practices to ensure that lighting fixtures fulfill requirements.

B. Coordinate with other electrical work and work of other trades as appropriate to properly interface installation of interior lighting fixtures.

C. Fasten fixtures securely to structural support; ensure that pendant fixtures are plumb. Fixtures placed in suspended or drywall ceilings shall have proper supports, boxes, and all wiring and components shall be accessible.

3.2 ADJUST AND CLEAN

A. Clean interior lighting fixtures of dirt and debris upon completion of installation.

B. Protect installed fixtures from damage during remainder of construction period.

3.3 FIELD QUALITY CONTROL

A. Upon completion of installation of interior lighting fixtures, and after building circuitry has been energized, apply electrical energy to demonstrate capability and compliance with requirements. Where possible, correct malfunctioning fixtures or components at site, then retest to demonstrate compliance; otherwise, remove and replace with new fixtures, and proceed with retesting.

B. At the time of Substantial Completion, replace lamps in interior lighting fixtures which are observed to be noticeably dimmed as judged by Architect/Engineer. Furnish stock or replacement lamps amounting to 10% (but not less than one lamp in each case) of each type and size lamp used in each type fixture. Deliver replacement stock as directed to Owner's storage space.

3.4 GROUNDING

A. Provide tight equipment grounding connections for each interior lighting fixture installation. All fixtures shall be bonded to branch circuit equipment grounding conductor.

3.5 NEUTRALS

A. Provide a separate neutral conducer for each lighting circuit connected to branch panelboard; shared neutrals are not acceptable.

END OF SECTION

SECTION 16512 - EXTERIOR LIGHTING

PART 1 - GENERAL

1.1 RELATED DOCUMENTS

A. Drawings and general provisions of Contract, including General Supplementary Conditions and Division - 1 Specification sections, apply to work of this section.
B. Division - 16 Basic Electrical Materials and Methods sections apply to work specified in this section.

1.2 SUMMARY

A. Extent of exterior lighting fixture work is indicated by drawings and schedules.
B. Types of exterior lighting fixtures in this section include the following:
   1. Light Emitting Diode (LED), unless otherwise indicated.

1.3 SUBMITTALS

A. Product Data: Submit manufacturer's product data and installation instructions on each type exterior building lighting fixture.

1.4 QUALITY ASSURANCE

A. Manufacturer's Qualifications: Firms regularly engaged in manufacture of exterior building lighting fixtures of types and ratings required, whose products have been in satisfactory use in similar service for not less than 3 years.
B. Installer's Qualifications: Firm with at least 3 years of successful installation experience on projects with exterior lighting fixture work similar to that required for project.
C. Codes and Standards:
   1. Electrical Code Compliance: Comply with applicable local code requirements of the authority having jurisdiction and NEC Articles 225, 250, 410, and 501 as applicable to installation and construction of exterior building lighting fixtures.
   2. NEMA Compliance: Comply with applicable requirements of NEMA Stds. Pub/No. LE 2 pertaining to lighting equipment.
   3. UL compliance: Comply with requirements of UL standards, including Stds. 486A and B, pertaining to exterior lighting fixtures. Provide exterior lighting fixtures and components which are UL-listed and labeled.

1.5 DELIVERY, STORAGE AND HANDLING

A. Deliver exterior lighting fixtures in factory-fabricated containers or wrappings, which properly protect fixtures from construction debris and physical damage.
B. Store exterior lighting fixtures in original wrappings in a clean dry space. Protect from weather, dirt, fumes, water, construction debris and damage.
C. Handle exterior lighting fixtures carefully to prevent damage, breaking, and scoring. Do not install damaged fixtures or components; remove units from site and replace with new.

1.6 SEQUENCING AND SCHEDULING

A. Coordinate with other electrical work including wires/cables, electrical boxes and fittings, and raceways, to properly interface installation of exterior lighting fixtures with other work.
B. Sequence exterior lighting installation with other work to reduce possibility of damage and soiling of fixtures during remainder of construction period.

1.7 MAINTENANCE

A. Maintenance Data: Submit maintenance data and parts list for each exterior lighting fixture and accessory; including "trouble-shooting" maintenance guide. Include that data, product data, and shop drawings in a maintenance manual; in accordance with requirements of division 1.
B. Extra Stock: Furnish stock or replacement lamps amounting to 10 percent (but not less than one lamp in each case) of each type and size lamp used in each type fixture. Deliver replacement stock as directed to Owner's storage space.

1.8 WARRANTY

A. For LED fixtures, lamps, drivers, and components, provide a complete warranty for parts and labor for a minimum of five years from the date of Substantial Completion.

PART 2 - PRODUCTS

2.1 MANUFACTURERS

A. Available Manufacturers: Subject to compliance with requirements, manufacturers offering products which may be incorporated in the work are listed on the fixture schedule.

2.2 EXTERIOR LIGHTING FIXTURES

A. General: provide lighting fixtures, of sizes, types and ratings indicated; complete with, but not limited to, housings, poles, energy efficient ballasts, starters, lamps and wiring.
B. Wiring: Provide electrical wiring within fixtures which is suitable for connection to branch circuit wiring as follows:
   1. NEC Type AF for 120-volts, minimum no. 18 AWG.; NEC Type SF-2 for 208-volts, minimum No. 18 AWG.
C. High-Intensity-Discharge Lamp Ballasts: Provide HID lamp ballasts, of ratings, types and makes as recommended by lamp manufacturer, which properly mates and matches lamps to electrical supply by providing appropriate voltages and impedances for which lamps are designed. Design ballasts to operate lamp within the lamp's power trapezoid requirements. Ballasts shall be high power factor type and primary shall be fused.
D. Lamps: Provide clear metal halide in wattage indicated.
E. Fusing: Provide Primary Fusing in all phase conductors.
F. Poles: Poles for LED luminaires shall be aluminum or as indicated on the drawings with factory finish as shown in the “Luminaire (Lighting Fixture) Schedule”. Aluminum poles shall be factory wrapped with heavy weatherproof paper for protection during handling and shipping.

G. LED Drivers: Luminaires shall be equipped with an LED driver(s) that accepts the voltage as indicated on the “Luminaire (Lighting Fixture) Schedule”. Individual driver(s) shall be replaceable. Drivers shall comply with the following requirements:
   1. Drivers shall be UL 8750 class 2 listed for their intended purpose.
   2. Drivers shall have a minimum efficiency of 85%
   3. Drivers shall reliably start at minimum ambient temperatures from -40^{0}C with to 40^{0}C with THD of <=20%.
   4. Drivers shall deliver full-range from 0-10V control signal.

H. LED Light Source (Light engine): All Led light engines shall be set to achieve IES, Type III, Type IV or Type V distribution as shown on the “Luminaire (Lighting Fixture) Schedule”. Individual light engines shall be replaceable. LED Light sources shall comply the following conditions: requirements:
   1. LED light engines shall have a minimum lifetime of 50,000+ hours at 40^{0}C and shall have a minimum efficacy of 80 lumens per watt.
   2. All LEDs shall be installed with 0 lumens above 90^0 up from nadir (full cut-off) performance.
   3. LED dies shall be tested in accordance with I.E.S.N.A. LM-80-08 standards.

I. Dimming Controls: Dimming controls shall be compatible with the lighting control system.

2.3 PHOTOCELL CONTROLLERS

A. 2000 watt, 120 VAC rated, conduit pedestal mounted, used to control an individual circuit or a lighting contactor; Tork Model #2101 or approved equal.

PART 3 - EXECUTION

3.1 EXAMINATION

A. Examine areas and conditions under which lighting fixtures are to be installed, and substrate which will support lighting fixtures. Notify Contractor in writing of conditions detrimental to proper completion of the Work. Do not proceed with the Work until satisfactory conditions have been corrected in a manner acceptable to Installer.

3.2 INSTALLATION OF EXTERIOR LIGHTING FIXTURES

A. Install exterior lighting fixtures at locations and heights as indicated, in accordance with fixture manufacturer's written instructions, applicable requirements of NEC, NECA's "Standard of Installation", NEMA standards, and with recognized industry requirements.
B. Tighten connectors and terminals, including screws and bolts, in accordance with equipment manufacturer's published torque tightening values for equipment connectors. Where manufacturer's torquing requirements are not indicated, tighten connectors and terminals to comply with tightening torques specified in UL Stds 486A and B, and the National Electrical Code.
C. Fasten electrical lighting fixtures and brackets securely to structural supports, and ensure that installed fixtures are plumb and level.

D. Construct reinforced concrete bases flush with grade, with conduits, anchor bolts and ground wire. Provide six foot minimum ground rod located six foot distant from pole, 24" below finished grade to top of ground rod; provide #4 ground wire.
E. Install poles on bases and adjust to provide plumb installation.

3.3 GROUNDING

A. Provide equipment grounding connections for exterior lighting fixtures. Tighten connections to comply with tightening torques specified in UL Std. 486A to assure permanent and effective grounds.

3.4 FIELD QUALITY CONTROL

A. At the Date of Substantial Completion, replace lamps in exterior lighting fixtures which are observed to be noticeably dimmed as judged by the Architect/Engineer.

3.5 ADJUSTING AND CLEANING

A. Aim adjustable lighting fixtures and lamps in night test of system.
B. Clean lighting fixtures of dirt and debris upon completion of installation.
C. Protect installed fixtures from damage during construction period.

3.6 DEMONSTRATION

A. Upon completion of installation of exterior lighting fixtures, and associated electrical supply circuitry, apply electrical energy to circuitry to demonstrate compliance with requirements. Where possible correct any malfunctions at the site, then retest to demonstrate compliance; otherwise, remove and replace with new units, and proceed with retesting.

END OF SECTION

SECTION 16671 - HEAT TRACE

PART 1 - GENERAL

1.1 SUMMARY

A. Section Includes:
   1. Self-regulating cables.
   2. Heat-tracing controls.

1.2 DEFINITIONS

A. Self-Regulating Index (SRI): The rate of change of power output in Watts per degree F, as measured between the temperatures of 50- and 100-degrees F.

1.3 REFERENCE STANDARDS

A. ASTM International:
   1. ASTM B193 - Standard Test Method for Resistivity of Electrical Conductor Materials.
   2. ASTM D2633 - Standard Test Methods for Thermoplastic Insulations and Jackets for Wire and Cable.
B. FM Global:
   1. FM Approval Guide.
C. National Electrical Manufacturers Association:
   1. NEMA 250 - Enclosures for Electrical Equipment (1000 Volts Maximum).
D. NFPA:
   1. NFPA 70 - National Electrical Code (NEC).

1.4 COORDINATION

A. Section 013000 - Administrative Requirements: Requirements for coordination.

1.5 SUBMITTALS

A. Section 013300 - Submittal Procedures: Requirements for submittals.
B. Product Data: Submit manufacturer information for system materials and component equipment, including thermal properties, electrical characteristics, and connection requirements.
C. Shop Drawings:
   1. Indicate system materials and component equipment.
   2. Submit wiring and control diagrams, installation and anchoring requirements, fasteners, and other details.
D. Manufacturer's Certificate: Certify that products meet or exceed specified requirements.
E. Manufacturer Instructions: Submit detailed instructions on installation requirements, including storage and handling procedures.
F. Source Quality-Control Submittals: Indicate results of factory tests and inspections.
G. Field Quality-Control Submittals: Indicate results of Contractor-furnished tests and inspections.
H. Manufacturer Reports: Certify that equipment has been installed according to manufacturer instructions.

I. Qualifications Statement:
   1. Submit qualifications for manufacturer.

1.6 CLOSEOUT SUBMITTALS

A. Section 017000 - Execution and Closeout Requirements: Requirements for submittals.
B. Project Record Documents: Record actual locations of piping and appurtenances receiving heat tracing, and locations of source power and controls.

1.7 QUALITY ASSURANCE

A. Perform Work according to manufacturer's standards.
B. Maintain one copy of each standard affecting Work of this Section on Site.
C. Items provided under this section shall be listed or labeled by UL or other Nationally Recognized Testing Laboratory (NRTL).
   1. Term "NRTL" shall be as defined in OSHA Regulation 1910.7.
   2. Terms "listed" and "labeled" shall be as defined in National Electrical Code, Article 100.
D. Regulatory Requirements:
   1. National Electrical Code: Components and installation shall comply with NFPA 70.

1.8 QUALIFICATIONS

A. Manufacturer: Company specializing in manufacturing products specified in this Section with minimum three years' documented experience.

1.9 DELIVERY, STORAGE, AND HANDLING

A. Section 016000 - Product Requirements: Requirements for transporting, handling, storing, and protecting products.
B. Inspection: Accept materials on Site in manufacturer's original packaging and inspect for damage.
C. Store materials according to manufacturer instructions.
D. Protection:
   1. Protect materials from moisture and dust by storing in clean, dry location remote from construction operations areas.
   2. Provide additional protection according to manufacturer instructions.

1.10 EXISTING CONDITIONS

A. Field Measurements:
   1. Verify field measurements prior to fabrication.
   2. Indicate field measurements on Shop Drawings.

1.11 WARRANTY

A. Section 017000 - Execution and Closeout Requirements: Requirements for warranties.

B. Furnish five-year manufacturer's warranty for heat tracing and components.

PART 2 - PRODUCTS

2.1 SYSTEM DESCRIPTION

A. Design Requirements: Provide pipe tracing cable system capable of maintaining pipe contents at temperature of 40°F when outside ambient temperature is 20°F with 20 mph wind.

2.2 MANUFACTURERS

A. Raychem 5BTV-CT
B. Or approved equal

2.3 CABLE DESIGN

A. Voltage: 120v, 60 Hz, 1 ph as shown on Drawings for electrical connection.
B. Parallel design, current flow across cable.
C. Heat output/ft constant, independent of length.
D. Capable of overlapping without creation of hot spots.
E. Cut to any length in field.
F. Self-regulating heat output.
G. Braided metallic shield.
H. Outer plastic jacket.
I. Provide manufacturers standard power connections, end seals, splice and tee kit components.
J. Provide lighted end seal on each individual heat trace line.
K. Provide proper fittings and appurtenances for field connection of system to conduit and wiring without need for procurement of special fittings or wiring devices.
L. Provide Hazardous Rated Equipment as Required. See Drawings for Hazardous Location Requirements.

2.4 SOLID STATE HEAT TRACE CONTROL AND MONITORING SYSTEM

A. Control and Monitoring System
    1. Manufacturer: Elexant 4010i series by Raychem or equal.
    2. Programmable keypad with password lockout feature to prevent unauthorized programming changes.
    3. Memory: Nonvolatile, restored after power loss.
    4. Temperature: °F or °C.
    5. Operating ambient temperature: -40°F to +140°F
B. Stored parameters:
    1. Minimum and maximum temperature.
    2. Maximum ground fault current.
    3. Maximum heater current.
    4. Power accumulator.
    5. Relay cycle count.
    6. Time in use.
C. Solid state relays with proportional control and have the ability to monitor the following
    1. Current.
    2. Resistance.
    3. Temperature.

4. Voltage.
5. Ground Fault: 30ma trip level and 20ma alarm level.
6. Dedicated solid state relay for each heat trace line

D. Alarm conditions:
1. Low/high temperature.
2. Low/high current.
3. Low/high voltage.
4. Low/high resistance.
5. Ground fault alarm and trip.
6. RTD failure.
7. Loss of programmed values.
8. Solid state relay failure.

E. Digital display with the following:
1. Actual temperature.
2. Control temperature.
3. Heat trace current.
4. Heat trace voltage.
5. Heat trace resistance.
6. Heat trace ground faults.
7. Programming parameter values.
8. Alarm values.

F. LED status lights:
1. Current mode.
2. Heater on.
3. Alarm condition.
4. Receive/transmit data.

G. Automatic diagnostic cycle to check heat trace lines for faults.

2.5 Thermostatic sensing control:

A. Provide ambient sensing thermostat to operate pipe heating systems when ambient temperature drops to 40°F.

B. Provide alarm thermostat on each heat trace line to monitor pipe temperature. Initiate alarm when pipe drops below 35°F.

C. Enclosure:
1. Viewing window on enclosure front for observing digital display of controller.
2. Padlockable enclosure.
3. NEMA 4X Stainless Steel.

D. Communications:
1. Provide interface hardware and software to operate from standard PC. The PC shall have the ability to monitor and program each heat trace control and monitoring unit.
2. Cable: Shielded twisted pair, daisy chained to heat trace control and monitoring units.
3. Each heat trace control and monitoring unit shall have a unique address.

2.6 Thermostatic sensing control:

A. Provide ambient sensing thermostat to operate pipe heating systems when ambient temperature drops to 40°F.
B. Provide alarm thermostat on each heat trace line to monitor pipe temperature. Initiate alarm when pipe drops below 35°F.
C. Enclosure:
    1. Viewing window on enclosure front for observing digital display of controller.
    2. Padlockable enclosure.
    3. NEMA 4X Stainless Steel.
D. Communications:
    1. Provide interface hardware and software to operate from standard PC. The PC shall have the ability to monitor and program each heat trace control and monitoring unit.
    2. Cable: Shielded twisted pair, daisy chained to heat trace control and monitoring units.
    3. Each heat trace control and monitoring unit shall have a unique address.

2.7 SOURCE QUALITY CONTROL

A. Section 014000 - Quality Requirements: Requirements for testing, inspection, and analysis.
B. Testing:
    1. Retain at least 75 percent of rated power after 20 years of operation at maximum published continuous exposure temperature.
    2. Retain at least 90 percent of rated power after 1,000 hours of operation at maximum published intermittent exposure temperature.
    3. Cable Dielectric Test: Passing 2.5 kV dielectric test for one minute according to ASTM D2633 after undergoing a 0.5 kg-m impact.
    4. Before shipment, demonstrate cable insulation resistance of 20 megohms minimum bus to braid using a 2,500-V dc megger, and demonstrate tolerance for one minute at voltage equal to twice rated plus 1,000 V applied bus to braid.
    5. Thermal Runaway:
        a. Ensure that cable produces less than 0.5 W/ft. when energized and heated to 350 degrees F for 30 minutes.
        b. After testing and reenergizing, demonstrate that cable does not have an increasing power output leading to thermal runaway.
C. Owner Inspection:
    1. Make completed heat-tracing assembly available for inspection at manufacturer's factory prior to packaging for shipment.
    2. Notify Owner at least seven days before inspection is allowed.
D. Owner Witnessing:
    1. Allow witnessing of factory inspections and tests at manufacturer's test facility.
    2. Notify Owner at least seven days before inspections and tests are scheduled.
E. Certificate of Compliance:

1. If manufacturer is approved by authorities having jurisdiction, submit certificate of compliance indicating Work performed at manufacturer's facility conforms to Contract Documents.
2. Specified shop tests are not required for Work performed by approved manufacturer.

PART 3 - EXECUTION

3.1 EXAMINATION

A. Section 017000 - Execution and Closeout Requirements: Requirements for installation examination.
B. Verify that surfaces of pipes, valves, and fittings are clean and dry.
C. Verify that piping has been inspected and is ready for insulation.

3.2 INSTALLATION

A. Install heat tracing before insulation is installed.
B. Install equipment according to manufacturer instructions.
C. If required, spiral heat-trace cable around piping to obtain proper heating per length of piping.
D. Do not overlay cable over cable.
E. Cover installed heating cable with thermal insulation and waterproof jacketing as soon as possible.
F. Affix following label to exterior of thermal insulation every 15 feet and readily visible from ground level: CAUTION: ELECTRIC HEAT TRACING.

3.3 FIELD QUALITY CONTROL

A. Section 017000 - Execution and Closeout Requirements: Requirements for testing, adjusting, and balancing.
B. After installation, inspect for proper operation.
C. Manufacturer Services: Furnish services of manufacturer's representative experienced in installation of products furnished under this Section for not less than five days on Site for installation, inspection, startup, field testing, and instructing Owner's personnel in operation and maintenance of equipment.
D. Equipment Acceptance:
    1. Adjust, repair, modify, or replace components failing to perform as specified and rerun tests.
    2. Make final adjustments to equipment under direction of manufacturer's representative.
E. Furnish installation certificate from equipment manufacturer's representative attesting that equipment has been properly installed and is ready for startup and testing.

3.4 ADJUSTING

A. Section 017000 - Execution and Closeout Requirements: Requirements for starting and adjusting.

B. Check control functions and adjust as required.

3.5 DEMONSTRATION

A. Section 017000 - Execution and Closeout Requirements: Requirements for demonstration and training.

B. Demonstrate equipment startup, shutdown, routine maintenance, and emergency repair procedures to Owner's personnel.

END OF SECTION

SECTION 16700 – GENERAL I&C REQUIREMENTS

PART 1 - GENERAL

1.1 DESCRIPTION

A. This specification covers the technical requirements for the fabrication, installation, engineering, wiring, adjustment, testing, start-up, commissioning, and training for the instrumentation and control (I&C) systems required for the project.
B. The instrumentation and control systems shall include all work and materials necessary to perform the control functions as illustrated on the electrical drawings as specified in the Division 16 Specifications.
C. The Systems Integrator subcontractor shall be responsible for work of this division.
D. All software program licenses, software programs, and passwords utilized on this project shall be turned over to the Owner at the end of the project and placed in the Owner's name.

1.2 SCOPE OF WORK

A. The new elevated tanks PLC and the provided RV50 cell modem shall be installed SCADA-ready. The RV50 sim card will have to be coordinated with RRDA and their current service provider. RRDA is currently under plans for complete SCADA revision to all their existing equipment. The SCADA System is an unknown factor for bidding purposes of this project and therefore shall not be included. During the completion of this project, the new SCADA system and equipment shall be in place and at this time, a change order request or direct work order to the RDA for integration of the new Tank PLCs and the booster station valve control shall be instituted.

1.3 QUALITY ASSURANCE

A. All work and materials specified herein shall be furnished by a single Systems Integrator (SI). The SI shall be an experienced and reputable firm, which has been engaged in the business of providing instrumentation and control systems for water and wastewater treatment facilities for at least five years.
B. Drawings and specifications shown are intended to convey information required for a complete functioning system for the purposes specified. The Systems Integrator shall be responsible for all details which may be necessary to properly install, adjust, and place in operation a complete and working system, including all mechanical and electrical installations, final wiring diagrams, connections, and the final layout, sizes and quantities of conduit and wiring communicated to the Electrical Contractor and other trades.
C. In order to achieve standardization in appearance, operation, maintenance, and spare parts, similar equipment provided under this contract shall be the end products of a single manufacturer.
D. Codes, specifications, and standards referred to by number of titles shall form a part of this specification to the extent required by the references thereto.

1.4 PRE-CONSTRUCTION SUBMITTALS

A. Submittals shall be as specified in the General Conditions and as further described below:
B. Submit the following:

1. Project schedule, which shall represent the Contractor's and System Integrator's best projections of when activities listed below will occur. Project schedules shall be updated at the Engineer's request, when major changes in the schedule occur. The activities shall include, but not be limited to, the following:
    a. Coordination and loop review meetings
    b. Shop drawing submittals for each group of equipment
    c. Shop drawing approvals for each group of equipment
    d. Equipment manufacturing/panel fabrication
    e. Equipment delivery
    f. Equipment installation
    g. System testing and calibration
    h. Operational testing and demonstration.
    i. As-built submittals
    j. Operation and Maintenance Manual submittals
    k. Operator training
    l. Follow-up Operator training at six months after substantial completion.
2. Manufacturer's certification of compliance with the referenced specifications and standards.
3. Certified copies of reports of factory tests specified herein and required by the referenced standards.
4. Shop drawings, indicating performance and physical data of the equipment specified herein.
5. Manufacturer's installation instructions.
6. Provide mounting details for field mounted equipment.
7. Manufacturer's operation and maintenance instructions.
8. If available, USB driver, DVD and CD ROM media produced by the equipment manufacturer, which contain demonstrations of operation and maintenance procedures for the equipment specified herein.

C. Physical requirements of submittals shall be as follows:
1. Submittals shall be submitted in three-ring binders, or similar bindings.
2. Submittals shall be organized and divided into logical division by means of tagged dividers. Each type of equipment shall be given a separate division.
3. Provide index sheets for the submittals.
4. Drawings shall be 8-1/2 by 11 inches minimum. Drawings larger than 11 by 17 shall be folded and put into a three-hole plastic pocket.
5. All text material shall at minimum be typewritten. Handwritten material is not acceptable.
6. Telecopied (FAX) documents or photocopies of faxed documents shall not be included in submittals. Submittals containing telecopied documents will be rejected and returned immediately.

D. Shop drawings shall include, but not be limited to, the following:
1. Instrument index, which shall include instrument tag numbers, instrument description and instrument calibrated ranges.
2. Typewritten specification sheets, which shall include manufacturer's names and complete catalog numbers.
3. Detailed calculations as applicable, which shall include, but not be limited to, the following:
    a. Power supply sizing calculations

b. Thermal loading (heat dissipation) calculations

4. Cut sheets and catalog information, which shall contain equipment specifications, dimensions, wiring and piping drawings, and installation and mounting details.
5. Loop drawings, which shall contain, but not be limited to, the following information:
   a. Loop numbers and instrument tag numbers
   b. Individual loop component locations
   c. Actual equipment wiring terminal designations, point to point wiring, and cable shield terminations
   d. Wire type, size and identification number
   e. Signal types (e.g., 120 Volt AC, 4-20 mA DC, pulse frequency, 3-15 psig, etc.)
   f. Contact orientations (e.g., normally open, normally closed, etc.)
   g. Equipment grounding requirements
   h. Sources of loop power, or power supply identifications
   i. Signal boosters, interposing relays and shunt resistors
      1) Reserve output capacity
6. Instrument and control panel layout drawings, which shall include, but not be limited to, the following:
   a. Bill of materials
   b. Front panel layout drawings
   c. Swing-out panel layout drawings
   d. Internal panel layout drawings
   e. Internal wiring diagrams, including wire type, size and identification number
   f. Terminal block layout drawings
   g. Nameplate lists
   h. Color schedules and samples
7. Elementary control diagrams.
8. Other descriptive information that will assist the Engineer with approval.

1.5 RECORD DRAWINGS (AS-BUILT) SUBMITTALS

A. Record drawings (as-built) submittals shall be as specified in the General Conditions, further described below:

B. The record drawings submittals shall consist of, but not be limited to, the following:
   1. Submit one set to the Engineer and one set to the owner of corrected contract documents. The original contract documents shall be marked to reflect 'as-built' conditions. Corrections shall be made in red.
   2. Submit one set to the Engineer and one set to the owner of corrected loop description. The original loop description shall be marked to reflect 'as-built' conditions. Corrections shall be made in red.
   3. Submit one set to the Engineer and one set to the Owner printer outputs of the final configuration or programs of all programmable controller-based equipment.
   4. Where applicable, submit to the Owner standard magnetic storage devices, such as CD/DVD disks, of all programmable controller-based equipment software and programs.
   5. Submit original licensed copies and original documentation for all software. All software licenses shall be in Owner's name.
   6. Where applicable, submit to the Owner two sets of pre-configured Read-only Memory Modules, such as EEPROMS or UVPROMS, of all programmable microprocessor-based

equipment. Each memory module shall be submitted in an anti-static zippered polybag, which shall be clearly labeled and identified.

1.6 OPERATION AND MAINTENANCE MANUALS

A. The Systems Integrator shall prepare and furnish Operation and Maintenance Manuals of the system, which shall be submitted to the Engineer prior to operator training described below. Provide four (4) bound hard copy sets and one (1) CD with complete electronic copy in pdf format.

B. The Operation and Maintenance Manuals shall include, but not be limited to, the following:

1. Approved shop drawings amended by approved change orders and as-built conditions.
2. Manufacturer supplied operating and installation manuals.
3. Detailed procedures and instructions on the operation, removal, installation, adjustment, calibration, and maintenance of each component provided under this contract.
4. As-built control panel and enclosure drawings, including termination drawings, PLC input/output (I/O) wiring diagrams, and panel bill of materials.
5. List of recommended spare parts, which shall include complete catalog numbers
6. List of local or the nearest manufacturer approved repair and service centers.

1.7 OPERATOR TRAINING

A. The System Integrator shall provide operation and maintenance training of the Owner's personnel. This training shall include, but not be limited to, the following:

1. The review of the Operation and Maintenance Manuals prepared and furnished by the System Integrator.
2. The review of 'as-built' panel layout drawings and wiring diagrams.
3. Hands-on training in the operation of each instrument and each loop.
4. Hands-on training in the maintenance, removal, and reinstallation of each instrument and each loop.
5. Hands-on training in the programming or configuration of all programmable microprocessor-based instruments. This does not include the PLC system.

B. For bidding purposes, the System Integrator shall include a minimum training period of one day, at eight hours per day, for up to five persons.

C. The System Integrator shall bear all expenses associated with the operator training activities, including labor, transportation and material costs.

PART 2 PROCESS DESCRIPTION

2.1 GENERAL

A. The new PLC control panels and SCADA System shall communicate via Ethernet/IP networking protocol over cell modem from tank to plant. Each tank panel shall be provided with a digital display for tank level and room temperature.

B. The new elevated tank levels shall have trending for all flows, levels, temperatures and pressures of the system configured into the existing SCADA system.

C. All trended analog signals shall be recorded using the current SCADA system historical software.

D. All alarms shall be made available to the existing SCADA system.

2.2 PROCESS CONTROL AND MONITORING DESCRIPTIONS

A. Elevated Tanks
    1. Each elevated tank shall have a PLC control panel, a pressure transmitter, a sail switch, door switches and a temperature transmitter. Each of these devices shall be fully monitored and integrated into the existing SCADA system.
    2. The elevated tank level and the temperature transmitter shall be displayed on digital displays on the control panel door. On the local display for tank level, the tank bowl level shall be shown in feet with two decimal places. On the SCADA system, both the pressure and the bowl level shall be displayed.

PART 3 EXECUTION

3.1 GENERAL

A. The System Integrator shall provide all materials and work necessary for a complete and functioning system and shall have full coordination responsibility of the electrical, mechanical, and structural work as specified herein and as shown on the drawings. The System Integrator shall ensure that the instrumentation and control system work is properly interfaced with equipment and other work furnished under other divisions of the contract documents.
B. The System Integrator shall install, make final connections to, adjust, test, and start-up the complete instrumentation and control system utilizing the technical service and advice of the various equipment and instrument manufacturers.

3.2 COORDINATION MEETINGS

A. Coordination and control loop review meetings shall be attended by representatives of the Contractor and the Systems Integrator as required for the scope of this project.
B. For bidding purposes, the Contractor and the Systems Integrator shall include cost for participation in no less than two (2) coordination and control loop review meetings. Each meeting shall require at least one-half working day.

3.3 PRODUCT DELIVERY, STORAGE, AND HANDLING

A. Materials and equipment shall be delivered to the job site at a maximum of ten days prior to installation and not before.
B. All instruments containing electronics components shall be stored off the ground in weathertight enclosures. They shall be kept dry at all times. All plug-in equipment which can be removed from panels without the necessity of disconnecting any wire terminations shall be removed from its panel before shipping. They shall be shipped in separate shipping containers.
C. All equipment covered by this specification shall be shipped in a thoroughly clean condition, free from sand, oil, grit or grease (except when required for lubrication), weld splatter, or other foreign materials. All panel openings shall be capped.

3.4 INSTALLATION

A. General
    1. Installation shall be in strict compliance with individual equipment manufacturer's instructions.
    2. All gages and indicators shall be mounted in the upright position.
    3. Provide sufficient space around the equipment for maintenance and removal.

4. Cover front panels, gages and indicators, during construction for protection from weld and paint splatter.
5. Unless otherwise impractical, support instruments independent of process piping.

B. Installation Hardware
1. All nuts and bolts shall be stainless steel.
2. Support channels shall be stainless steel unistrut channels with stainless steel hardware.
3. Do not mount equipment directly to masonry or concrete walls. Provide unistrut channels on wall.
4. All equipment mounting plates shall be of 0.25-inch thick minimum stainless steel.
5. All contact surfaces between dissimilar metals shall be gasketed to prevent galvanic reaction.

C. Instrument Disconnect and Surge Protection
1. All analog signal wiring located outside of the location of the residing PLC or is connected directly to a metal conductive structure shall be provided with surge protection at both the transmitting end and at the receiving end.
a. At the instrument - TP48 by Telematic, Liebert FLW series.
b. At PLC – SD Series by MTL Surge Technologies or equal.

D. Weather Protection
1. Unless noted otherwise or impractical, all externally located instruments shall be installed to face north.
2. All externally located instruments, indicators, totalizers, control panels and control stations shall be mounted on a panel or mounting plate, which shall be provided with an aluminum or stainless steel weathershield to protect the instruments from direct exposure to the sun and weather. This weathershield shall be 3” wider at each end and have a 6” overhang in front of the instrument. All edges shall be smooth and rounded.

3.5 EQUIPMENT IDENTIFICATION AND TAG NUMBERS

A. All apparatus, control equipment, and instruments, both panel and field mounted, shall be plainly identified, using the following methods:
1. Pipe-mounted instruments shall be provided with embossed stainless-steel tags, which shall be attached to the instruments by means of stainless-steel wire or tie wrap.
2. Wall, plate, or panel mounted instruments shall be provided with engraved laminated plastic tags, which shall be mounted above, or below instruments. The plastic tags shall be mounted at eye level and shall be visible from a minimum distance of 20 feet. Lettering shall be black on white background.

B. Tag numbers and engraved or embossed text shall be as shown on the drawings, or as approved by the Engineer during shop drawing approval.

C. Tag numbers shall conform to the current Instrument Society of America (ISA) Standards, unless otherwise noted, which shall consist of a multi-character prefix, followed by a loop number. Tag numbers shall be as indicated on the drawings.

3.6 TESTING AND CALIBRATION

A. Test all analog loop zeroes and spans by disconnecting wiring at each transmitter and substituting an approved 4-20madc generator. Adjust the indicators and receiving instruments to indicate the correct value, correlated to the simulated current signal.

B. Test all annunciator points by placing jumpers across normally open contact inputs, or by disconnecting wiring on normally closed contact inputs.

C. Submit testing and calibration reports for all instruments to the Engineer.

3.7 COMMISSIONING

A. This activity shall consist of individual loop/instrument tests, overall systems test, and Operator training. Each test shall be witnessed by representatives of the Contractor, Systems Integrator, Owner, and Engineer.
   1. Loop Operation Test: The objective is to demonstrate that the instrumentation and control system individual instruments are ready to be placed into permanent operation. Each loop shall be tested and demonstrated.
   2. Control Function Test: The objective of this test is to demonstrate that all local and remote-control panels, control stations, MCC, and Operator interface functions are ready to place into permanent operation. All features of the WTP CP and HMI shall be demonstrated.
   3. The Contractor shall prepare an agenda for the commissioning and submit to Engineer as part of the shop drawing submittal package.
   4. The Contractor shall conduct training as specified.
   5. Substantial completion of the system shall not be approved until satisfactory completion of the above commissioning tasks.

3.8 WARRANTY

A. The Instrumentation and Control System shall be fully warranted and guaranteed from defect for a one-year time period, beginning at the date of substantial completion.
B. During the warranty period adjust, recalibrate, repair, replace and otherwise place back into service any instrument and any item(s) that may require service, including software, at no additional cost to the Owner for any reason.
C. During the warranty service, provide unlimited on-site software and operation support, at no additional cost to the Owner for any reason.
D. Respond to a call for service within 24 hours.
E. At approximately six months completion of the warranty period, visit the plant and perform routine diagnostics and tests to determine on-going operation and performance of the I & C system within the project requirements. Make any and all repairs and adjustments necessary at no additional cost to the Owner for any reason. Conduct additional “follow-up training” to assist the Owner in operation of the plant and to address any operational concerns that may have become known after six months of operation.

END OF SECTION

SECTION 16710 – CONTROL PANELS

PART 1 - GENERAL

1.1 DESCRIPTION

A. This specification covers the technical requirements for the fabrication, engineering, wiring and installation for instrument panels and enclosures.

B. The instrument panels shall be as shown on the drawings. They shall include, but shall not be limited to the following:

1. Slugger Elevated Tank RTU PLC control panel

1.2 SUBMITTALS

A. Submittals shall be as specified in the appropriate sections.

PART 2 - PRODUCTS

2.1 GENERAL

A. The instrument panels and enclosures shall be as follows:

1. Located in environmentally controlled (heated and ventilated) rooms, shall be steel rated NEMA 12.
2. General instrumentation and control panels located outdoors or in non-air-conditioned areas shall be stainless steel rated NEMA 4X.

B. NEMA 12 enclosures shall be painted electro-statically, prior to equipment installation:

C. The exterior surfaces of a NEMA 4X stainless steel enclosure shall not be painted. The finish shall be sandblasted, roughened or chemically etched to reduce gloss, reflections & glare.

D. Conduit knockouts on the enclosure shall be made prior to installation of any equipment within the enclosure. The size and the number of conduit knockouts shall be as required. Provide malleable iron watertight conduit hubs for all NEMA 4X enclosures.

E. All enclosures exposed to weather conditions shall be provided with sun shields to protect the enclosure from direct exposure from the sun and rain.

2.2 PANEL CONSTRUCTION

A. General

1. Stiffening members shall be provided for strength and stiffness as required.
2. Seamless welded construction shall be used throughout. All exposed seams shall be continuously welded and ground smooth.
3. Lifting rings shall be provided for panels in excess of 100 pounds.
4. Subpanels shall e provided as required, with mounting designed for easy removal. The subpanels shall be finished with 2 coats if white enamel paint.
5. Print pockets shall be attached to the interior side of each door.
6. Hinges shall be stainless steel piano type.

B. NEMA 12 Enclosures

1. NEMA 12 enclosures shall be fabricated from 12 gauge cold rolled sheet steel or better.
2. Double doors shall be of the flush type construction with continuous hinge and gasket.
3. Doors shall be equipped with three-point latching mechanism and door locks.

4. Corrosion inhibitors shall be furnished for corrosion control inside the panel.

C. NEMA 4X Enclosures
   1. Nema 4X enclosures shall be fabricated from 14 gauge stainless steel or better.
   2. Enclosure door shall be provided with neoprene gasket, which shall be attached to the enclosure with oil-resistant adhesive, and held in place with stainless steel retaining strips.
   3. Door clamps shall be provided on three sides of the enclosure door.
   4. A hasp and staple shall be provided for padlocking.
   5. Panel heaters, corrosion inhibitors and breather drains shall be furnished for condensation and corrosion control inside the panel. Panel heaters shall be of the forced air types, provided with integral thermostat control.

2.3 PANEL GROUNDING

A. Where noted or specified, provide a ground bus tied to the facility grounding system.
   1. The ground busbars shall be of nickel-plated copper, rated for at least 100 amperes.
   2. The busbar shall be provided with two (2) screw clamp terminal blocks, which shall be capable of accepting conductors up to #2 AWG.
   3. The busbar shall be provided with a minimum of twenty (20) screw clamp terminal blocks, which shall be capable of accepting conductors up to #10 AWG.

2.4 PANEL WIRING

A. Wiring within the enclosure shall be continuous and shall be terminated only at terminal blocks or equipment terminals.
B. Not more than two wires shall be terminated at any terminal.
C. Wiring splices and wire nuts will not be permitted within the enclosure.
D. Wiring within the enclosure shall be protected as follows:
   1. In general, all wiring within the enclosure shall be put in plastic wiring ducts. Wiring ducts shall be sized to include 100% (percent) spare capacity.
   2. Wiring outside of the ducts shall be restrained by means of plastic ties.
   3. Wiring passing a door hinge shall be grouped and wrapped in a protective wire harness.
   4. Provide abrasion protection for any wire bundles passing through holes or across sheet metal edges.
E. In general, wiring within the enclosure shall be as follows:
   1. 120VAC control wiring within and external to the enclosure shall be #14 AWG stranded.
   2. DC control wiring within the enclosure shall be #16 AWG stranded.
   3. Wiring for long distance DC signals shall be #14 AWG stranded.
   4. Wiring for 4-20 mA DC analog signals shall be #16 AWG twisted shielded pair.
F. In general, wiring within the enclosure shall follow the following color convention to comply with NFPA 79 (1994), part 16.
G. AC and DC wiring shall be separated from each other. Where AC and DC wire runs parallel, the minimum separation between them shall be four (4) inches. Where AC and DC wire runs cross, they shall cross at 90°. Provide separate wiring duct for AC and DC wiring.
H. Equipment and signal ground wiring, as well as Neutral wiring, shall not be daisy-chained; they shall each be terminated at isolated, bussed terminal blocks.
I. Each conductor end shall be terminated at a terminal block or at an equipment wiring terminal. Each terminal block shall have a unique identification number. The terminal blocks shall be arranged and numbered in consecutive order, based on standard alpha-numeric order.

J. Terminal blocks within each enclosure shall be grouped for the voltage and type of circuit connected.
K. Provide 25% spare terminal blocks (minimum of six) for each type used in each enclosure.

2.5 TERMINAL BLOCKS

A. Terminal blocks within enclosures shall be of the high density modular types, constructed of nylon material, suitable for mounting on standard DIN rails. Termination type shall be tubular screw with serrated pressure plate. The terminal block system shall be manufactured by Phoenix Contact, Weidmuller, or pre-approved equal.
B. All current carrying parts (metal bodies) shall be made of nickel/tin-plated copper.
C. Ground terminals shall be color coded in accordance with international standard, which shall be yellow/green.
D. Matching jumper bridges shall be color coded to the wiring colors.
E. Panel power distribution fused terminal blocks shall be provided with disconnect lever puller mechanism and illuminated indication.

2.6 PANEL ACCESSORIES

A. The Systems Integrator/enclosure fabricator shall be responsible for all accessories, including interposing relays, analog signal isolators, terminal blocks, power distribution blocks, grounding blocks, fuse blocks and fuses, circuit breakers, duplex receptacle, heaters, exhaust fans, louvers and filters, DIN mounting rails, plastic wiring channels, hardware, wire tags, engraved nameplates, and all such accessories needed for a professional class panel fabrication.

2.7 PILOT AND CONTROL DEVICES

A. Pilot Devices: Pushbuttons, selector switches, and indicating lights shall be rated heavy-duty, oiltight or watertight and corrosion resistant as required. All units shall be furnished with standard size legend plates with legends as indicated on the project Drawings.
B. For Class 1, Division 2 areas, devices shall either be explosion proof type, or all contacts and other items which may arc or spark shall be hermetically sealed. Hermetically sealed contacts and devices shall meet the current and voltage ratings required for the circuit.
C. Selector switches shall have the number of positions, switching arrangement, number and type of contact blocks indicated on the project Drawings.
D. Contact blocks shall have a minimum continuous current rating of 10 amperes at 240 VAC. Contact blocks shall have screw type connection terminals.
E. Indicating lights shall be LED type only. Provide flashing type lights where indicated.
F. Pilot lights shall be 120VAC, PTT 30.5mm type.
G. Pilot device manufacturers shall be:
    1. Square D, Class 9001, Type K
    2. Allen-Bradley Bulletin 800H or 800T
    3. IDEC
    4. Approved Equal
H. Control relays shall be plug-in type with sockets and hold-in clips. Sockets shall have screw terminals. Contacts shall be silver-cadmium, rated 10 amperes at 240 VAC. Relays shall have as a minimum two pole, double throw contacts (2PDT). Relays shall have a manual operator and miniature pilot light. Coil voltages shall be 120 VAC, or as noted on the project Drawings. Relays shall be as manufactured by Allen-Bradley Bulletin 700, Type HA

or HB, Square D, Idec, or approved equal.

I. Latching relays shall be similar to the control relays. Relay position shall be magnetically held, and shall be the single coil type.

J. Timing relays shall be solid sate, plug-in type with screw terminal sockets. Each relay shall have 5 adjustable timing ranges, switch selectable, and 4 timing modes, switch selectable. Timing ranges shall allow from 0.05 seconds to 999 minutes timing. Timing modes shall be ON delay, OFF delay, ONE SHOT, and REPEAT CYCLE. Output contacts shall be DPDT, rated 10 ampere at 240 VAC. Timing setting shall be by thumbwheel switches. Coil voltages shall be 120VAC, or as noted on the project Drawings.

K. Elapsed Time Totalizers (ETT's) shall be the synchronous motor driven type with digital readout to indicate the total time a piece of equipment is energized. Totalizer shall have a minimum of six digit wheels including a 1/10 digit wheel to provide the range of time measured in hours, unless noted otherwise. Units shall be non-resettable, and operate on 120V, 1 phase, 60 Hz. Elapsed Time Meter (ETM) shall be considered synonymous with Elapsed Time Totalizer (ETT).

2.8 EQUIPMENT IDENTIFICATION AND WIRE TAGGING

A. All equipment and wiring identifications shall conform to and be compatible with the Owner's current labeling system, and shall be completed prior to final acceptance of the work. It is the responsibility of the Contractor to coordinate with the Owner's Engineer, to obtain from him or her, all labeling standards and documentation.

B. All control wiring shall be identified by means of computer-generated, heat shrink type wire marker. Wire numbers shall be as shown on the drawings.

C. Each component mounted within the enclosure shall be provided with equipment identification. Equipment and device nameplates or identification shall be of engraved laminated plastic, with black lettering on white background. Nameplates shall be as listed herein or as shown on the project Drawings.

D. The enclosure vendor shall be responsible for providing and sizing all instrument loop power supplies. The instrument loop power supplies shall be sized to include at least 100% spare capacity. The enclosure vendor shall submit power supply load calculations with the panel shop drawings.

2.9 REGULATED POWER SUPPLY

A. When DC power supply is required for PLC discrete inputs, and 2-wire analog loops, provide at least two redundant 24 V DC regulated power supplies.

B. The power supply shall be sized to include 100% spare capacity.

C. Acceptable power supply manufacturers:
   1. Phoenix Contact
   2. SOLA
   3. IDEC
   4. Approved equal

2.10 UNINTERRUPTIBLE 120VAC POWER SUPPLY

A. When panels include a programmable controller or computer, provide an uninterruptible power supply to condition incoming power and ride-through utility power interruptions. UPS shall be 850VA minimum.

B. Acceptable power supply manufacturers:
    1. Allen Bradley 1609 series
    2. APC
    3. or approved equal.

PART 3 - EXECUTION

3.1 GENERAL

A. All panels shall be installed level and plumb.
B. Installation Hardware
    1. All nuts and bolts shall be stainless steel.
    2. Support channels mount externally, or mounted in a corrosive atmosphere, shall be either reinforced fiberglass or stainless steel unistrut channels. All cuts and holes on fiberglass unistrut channels shall be coated with appropriate resin coating to protect them from deterioration.
    3. Do not mount equipment directly to masonry or concrete walls. Provide unistrut channels on wall.
    4. All equipment mounting plates shall be of 0.25-inch thick minimum clear anodized aluminum.
    5. All contact surfaces between dissimilar metals shall be gasketed to prevent galvanic reaction.
C. Touch up all nicks, scratches, etc. with materials as recommended by the enclosure manufacturer.

END OF SECTION

SECTION 16720 – FIELD INSTRUMENTATION

PART 1 - GENERAL

1.1 DESCRIPTION OF WORK

A. The work required under this section includes the provision, installation, start-up, testing and calibration of all field mounted instruments required for this project.

B. This section covers field mounted instruments provided separately from a manufactured system or process equipment package, to be used on the various portions of the project, and the Contractor shall meet the requirements of these Specifications wherever applicable.

C. The types of field mounted instruments required for this project include the following:

1. Pipe mounted Pressure Transducer and Transmitter for each tank. See below.

2. Pipe mounted flow switch for overflow alarm. Dwyer Instruments Model #V8-WP2, Vane operated flow switch with metal weatherproof conduit box.

1.2 QUALITY ASSURANCE

A. Manufacturers: Firms regularly engaged in manufacture of field mounted instruments and systems of types and sizes required, whose products have been in satisfactory use in similar service, and whose products meet all requirements specified herein.

B. Installer: Qualified with successful installation experience on projects with field instrument work similar to that required for this project.

1. It is intended that an experienced electronic systems/instrumentation and control systems subcontractor shall be in responsible charge of all field instrument work.

C. ISA Compliance: Comply with applicable Standards and Practices for Instrumentation published by the Instrument Society of America pertaining to field mounted instruments and related installations.

D. UL Compliance and Labeling: Comply with provisions of UL safety standards pertaining to electrical systems and provide products and components which have been UL-listed and labeled whenever such UL listed products are available.

E. NEC Compliance: Comply with requirements as applicable to construction and installation of field mounted instruments and installations.

1.3 SUBMITTALS

A. Prepare and submit shop drawings and descriptive data for each instrument and information regarding field installation of each instrument.

1.4 PRODUCT DELIVERY, STORAGE AND HANDLING

A. Ship instruments and accessories properly protected and packaged.

B. Handle instruments and accessories carefully to prevent damage and protect from weather.

PART 2 - PRODUCT

2.1 GENERAL

A. For each field mounted instrument, provide a complete assembly with all required components, enclosures suitable for the environment and location, fittings, mounting brackets, and other components and accessories as needed to form a complete system.
B. Provide conduit, raceway accessories, wiring and connections necessary to place the instruments into service and necessary to interface the instruments to other equipment control panels, programmable controllers, SCADA system, and similar installations as required for the project.
C. Include TVSS units as specified per specification 16720.

2.2 PIPE MOUNTED PRESSURE TRANSDUCER (USED FOR MEASURING LEVEL)

A. General
   1. Provide total two (2) pipe mounted pressure sensors and (2) transmitters for this project.
   2. This section describes the requirements for a pipe mounted level measuring system. Under this item, the contractor shall furnish and install the level measuring system, and all associated equipment and accessories as indicated on the plans and as herein specified.
B. Primary level control shall be from a pipe mounted pressure transducer.
C. The liquid level of the following areas shall be sensed by maintenance free Loop Powered Pipe mounted Level Transducer system that uses reliable hydrostatic head pressure sensing principle to provide an accurate and reliable proportional 4-20 mA signal representing level/pressure/temperature. Other technologies that can be affected by foaming, turbulence, grease, suspended solids build up, atmospheric changes, condensation, or false echoing shall not be acceptable. Pipe mounted sensor systems that use protective caps or cages to protect the sensing diaphragm, are susceptible to solids build up, shall be considered high maintenance and unreliable, and shall not be acceptable. The transducer shall be suitable for continuous submergence and operation and shall be installed in accordance with manufacturer's instructions. The bottom diaphragm face of the sensor shall be installed 6 inches above the floor. The sensor shall be mounted using a stainless-steel cable system.
D. The transducer housing shall be fabricated of a Teflon™ coated 316 stainless steel with a bottom diaphragm 2-5/8" diameter of heavy-duty, limp, foul-free, molded Teflon™ bonded to a synthetic rubber back/seal. System design shall allow maintenance free operation in both water and wastewater environments (high solids). Housing construction shall resist and be unaffected by the buildup of solids on its surfaces or sensing diaphragm. The transducer electronics shall be encased within the protective housing and shall be electrically and mechanically isolated from the sensed media via non-conductive fluid filled pressure transference cavity and barometric compensated transducer electronics chamber. Metallic or ridged diaphragms shall not be acceptable in that they are subject to damage or distortion.
E. The pipe mounted level transducer shall be a two-wire type and shall operate from a supply voltage of 9 to 30 VDC and produce a 4-20 mA signal in direct proportion to the measured

level excursion over a pre-calibrated range of 0 to 30 PSI. The unit shall have ample instrument loop load capacity and shall be able to drive a minimum load of 750 Ohms @ 24 VDC loop power. The sensor technology shall be based on the use of a highly reliable and stable piezo-resistive pressure element with a .25% full scale accuracy with compensation for non-linearity, hysteresis and repeatability. The unit shall operate over a wide –40 to 185 Deg F. temperature range and shall have not more than a 3% full scale error over a –4 to 180 Deg F. range.

F. The transducer element shall incorporate high over-pressure protection and be designed to withstand intermittent overpressures (8X (1.5 PSI) 4X (5 PSI) 2X (15 & 30 PSI) –Select One) times the full-scale range being sensed. Sensing principles employing less reliable technologies including LVDTs, capacitance or pneumatic elements shall not be acceptable.

G. The internal pressure of the transducer assembly shall be relieved to atmospheric pressure through a heavy-duty urethane jacketed hose/cable assembly with a dedicated breather tube. The tube shall be ridged to prevent compression that may result from mounting or folding of the cable through installation. The breather system shall be sealed through the use of a rugged maintenance free air bladder assembly connected to the breather tube and mounted within a junction box or monitoring panel. The sealed breather system shall compensate for variations in barometric pressure including expansion and contraction of air due to temperature changes and altitude as well as prevent fouling from moisture and other corrosive/atmospheric elements.

H. The transducer shall be installed where directed by the Engineer and connected with other system elements and placed in successful operation. It shall be provided with input power and output signal transient protection, associated control elements as specified herein and in accordance with manufacturer's instructions.

I. The transmitter shall have two analog input, two analog output with 120V AC power supply.

J. Acceptable Manufacturers:
   1. Endress + Hauser pressure transducer #PMP21-AA1C1PFVXJ and transmitter #RIA46

2.3 SAIL SWITCH

A. General
   1. Provide and install a sail switch on the overflow pipe to monitor the down flow of water to generate an overflow alarm.

2.4 DOOR SWITCH

A. General
   1. Provide and install a door activation switch on the personal access door and on the maintenance overhead door.
   2. The door switches shall be monitored by the local PLC and delivered to the SCADA system to indicate tank entry warning.

2.5 DIGITAL DISPLAY

A. General
   1. Provide and install (2) two digital displays in each elevated tank PLC control panel.
   2. Each display shall be configured for its' individual process. Each display shall display a value based on a 4-20mA signal from field equipment. The 4-20mA signal shall be a split to provide a signal to the PLC and a signal to the display.

PART 3 - EXECUTION

3.1 INSTALLATION - GENERAL

A. Each instrument or system shall be installed, wired, calibrated, and tested in strict compliance with the manufacturer's instruction. Calibrate for operational range required for this project.

B. Installation Hardware
   1. All nuts and bolts shall be stainless steel.
   2. Support channels mount externally, or mounted in a corrosive atmosphere, shall be stainless steel unistrut channels.
   3. Do not mount equipment directly to masonry or concrete walls. Provide unistrut channels on wall.
   4. All equipment mounting plates shall be of 0.25-inch thick minimum stainless steel.
   5. All contact surfaces between dissimilar metals shall be gasketed to prevent galvanic reaction.

C. All test instruments used for field calibrations shall have a minimum accuracy of 3 times greater than that of the instrument being calibrated. Test instruments shall have been calibrated to National Bureau of Standards requirements within 6 months of their use on this project. Provide evidence of such calibration upon request by the Owner of Engineer.

D. Final conduit connection to the instruments shall be through watertight flexible conduit. Where noted, final connection shall be by extra hard service cable rated for wet location. Use explosion-proof or liquid-tight flexible conduit where required.

E. Line powered units shall receive 120-volt AC supply through a disconnect switch and surge protector, see specification 13600 for description.

3.2 ENVIRONMENTAL PROTECTION

A. Transmitters and similar items located outdoors or in unheated or untreated spaces must be manufactured for the environment to be encountered. If not suitable for the environment where located, the Contractor shall provide a heated and insulated and exhaust fan ventilated enclosure suitable for the environment, to protect the transmitter or instrument.

All transmitters and local control stations shall have aluminum sheet metal sun shields/weather shields.

3.3 CALIBRATION

A. In addition to the above requirements, calibrate each system as follows:
   1. Each system, including its complete instrument loop, shall be calibrated. Reading on the remote receiving instruments shall be equal to reading at the converter indicator.
   2. Provide a written loop-calibration report for each system, which shall include but shall not be limited to the following:
      a. Date & time the final calibration was completed.
      b. Atmospheric conditions when the final calibration was performed.
      c. Comparison of readings at the converter with readings at the remote receiving instruments.
      d. Provide a table showing calculated and measured values at 0%, 25%, 50%, 75% & 100%.
      e. Verification of accuracy of the outputs, including those at the receiving

instruments.

f. Verification of operation of all contact outp8uts, including those at the receiving instruments.
g. Description of method of calibration.
h. The names and signatures of personnel performing the calibration. Provide room for 2 names.
i. The names and signatures of engineer's field representatives. Provide room for 2 names.
j. Special comments or notes, including "as left" conditions.
k. This report may be 2 pages if required for each instrument.

END OF SECTION

SECTION 16730 – PROCESS CONTROLS SYSTEMS - SCADA

PART 1 - GENERAL

1.1 DESCRIPTION OF WORK

A. The work required under this section includes the provision, installation, start-up, testing and calibration of all computer, controller, software and networking required for this project.

B. The types of systems required for this project include the following:
   1. PLC components shall be Allen Bradley CompactLogix (no exceptions)

C. The Systems Integrator shall be responsible for work of this division. System Integrator shall have a least a minimum of (5) five years' experience of similar Instrumentation and Control work.

1.2 QUALITY ASSURANCE

A. Manufacturers: Firms regularly engaged in the startup and commissioning of SCADA and similar systems of types and sizes to this project, whose products have been in satisfactory use in similar service, and whose products meet all requirements specified herein.

B. Installer: Qualified with successful installation experience on projects with field instrument work similar to that required for this project.

C. ISA Compliance: Comply with applicable Standards and Practices for Instrumentation published by the Instrument Society of America pertaining to field mounted instruments and related installations.

D. UL Compliance and Labeling: Comply with provisions of UL safety standards pertaining to electrical systems, and provide products and components which have been UL-listed and labeled whenever such UL listed products are available.

E. NEC Compliance: Comply with requirements as applicable to construction and installation of field mounted instruments and installations.

1.3 SUBMITTALS

A. Provide submittals in accordance with Section 16700.

1.4 PRODUCT DELIVERY, STORAGE AND HANDLING

A. Ship instruments and accessories properly protected and packaged.

B. Handle instruments and accessories carefully to prevent damage and protect from weather.

PART 2 - PRODUCT

2.1 GENERAL

A. For each system, provide a complete assembly with all required components, enclosures suitable for the environment and location, fittings, mounting brackets, and other components and accessories as needed to form a complete system.

B. Coordinate all conduits, raceway accessories, wiring and connections necessary to place the systems into service and necessary to interface the instruments to other equipment control panels, programmable controllers, SCADA system, and similar installations as required for the project with the Electrical Contractor.
C. Provide Owner with original licenses for all copies of all software, for all equipment and systems provided in Division 16. Provide the Owner with software version and printed documentation of all programs, as part of Record Documents and Operation and Maintenance Manuals. Provide the owner with copies of all PLC programs and the local panel HMI programs on (3) three CDs and (1) one thumb drive. Provide the Owner with all passwords required for full program access for all levels of PLC and network programming. All programs shall have been stored with documentation so that any future programmer may know what each address and program function is for. The Owner shall have full legal right to use without restriction, and modify if they choose at their own risk, all programs, screens and reports prepared for this project, for their use in operating, maintaining, and managing their facilities.

2.2 CELL MODEM

A. For each elevated tank PLC control panel, a cell modem shall be provided, configured and installed to communicate with the existing Plant SCADA system.
B. The cell modem shall be provided with a SIM card to match existing cell modem service provider settings. Coordinate with city personnel to obtain service provider information.
C. Cell modem shall be a Sierra Wireless RV50, no exceptions.

2.3 NETWORKING

A. Provide all necessary networking setup and hardware to create a complete networked system between PLCs, cell modems and existing SCADA system.
B. Minimum requirements:
    1. Provide in each specified PLC control panel an Ethernet switch with multiple ports to accommodate all equipment requiring Ethernet connection. The switch will be 10/100Mbs with auto-switching capabilities.
    2. A spare Ethernet port will be available for future connection and troubleshooting.
    3. Control panels requiring fiber conversion shall have a Fiber/Ethernet switch similar to Sixnet SLX-6RS-4ST or equal.
C. Provide and setup all connections to existing main PLC.

2.4 PROCESS CONTROLLERS

A. MANUFACTURERS
    1. Allen-Bradley CompactLogix Series 5370 or 5380.
    2. No Substitutes.

B. GENERAL
    1. Perform stand-alone monitoring and control and include following as minimum.

a. Microprocessor based controller (PLC processor) to execute program instructions, store data, and control data transfer.
b. PLC memory.
c. I/O subsystem interfaces.
d. Power supply, including power conditioning and surge protection.
e. Communication interfaces.
f. Programming interface.

2. Must integrate with any existing network of PLCs, ASDs, LOIs and HMIs.
3. See drawings for list of IO and connectivity to field instruments and devices.

C. REFERENCES
1. The PAC shall be listed or recognized by the following registrations:
2. UL Listed
   a. Industrial Control Equipment, File E65584
   b. Class I, Division 2, Groups A, B, C, and D Hazardous Locations, File E194810
3. CE marked
   a. 2004/108/EC EMC Directive, compliant with:
      i. EN 61326-1; Meas./Control/Lab., Industrial Requirements
      ii. EN 61000-6-2; Industrial Immunity
      iii. EN 61000-6-4; Industrial Emissions
      iv. EN 61131-2; Programmable Controllers (Clause 8, Zone A & B)
   b. 2006/95/EC LVD, compliant with:
      i. EN 61010-2-201; Control Equipment Safety Requirements
4. RCM marked, compliant with EN 61000-6-4; Industrial Emissions
5. Ex marked, 94/9/EC ATEX Directive, and IECEx System compliant with:
   a. EN/IEC 60079-15; Potentially Explosive Atmospheres, Protection “n”
   b. EN/IEC 60079-0; General Requirements
   c. II 3 G Ex nA IIC T4 Gc
   d. DEMKO15ATEX1455X and IECEx UL 15.0007X
      when used at or below 125 VAC
6. KC marked, compliant with Article 58-2 of Radio Waves Act, Clause 3

   a. The PAC shall meet Institute of Electrical and Electronics Engineers, Inc. (IEEE) applicable standards.

   b. The PAC shall be ODVA conformance tested to EtherNet/IP specifications.

D. QUALITY ASSURANCE
1. The supplier shall provide PAC system components by a single manufacturer:
   a. Only communication modules for communication or network media functions that are not provided by the PAC manufacturer may be produced by third-party sources.
2. Only PAC manufacturer-approved hardware, including cables, mounting hardware, connectors, enclosures, racks, communication cables, splitters, terminators, taps, and removable media, may be used.
3. All PAC system components shall be new, free from defects, and produced by manufacturers regularly engaged in the manufacture of these products.

E. DELIVERY, STORAGE, AND HANDLING
1. The supplier shall deliver PAC components in packaging designed to prevent damage from static electricity and physical damage.
2. The supplier shall store the equipment according to manufacturer requirements and

in a clean and dry space at an ambient temperature range of -40 °C to 85 °C (-40 °F to 185 °F).

3. The supplier shall protect the units from exposure to dirt, water, fumes, corrosive substances, and physical damage.

F. WARRANTY

1. The manufacturer shall provide their standard parts warranty for eighteen (18) months from the date of shipment or twelve (12) months from the date of being energized, whichever occurs first.
2. This warranty applies to PACs.

G. CONSTRUCTION

1. The programmable automation controller (PAC) shall be part of a modular system with expansion capability. The available expansion shall be local I/O modules or distributed (remote) I/O connected through a network. The local system shall include:
   a. A DIN rail-mounted PAC with CPU, memory, embedded dual Ethernet ports, and embedded energy storage.
   b. An end cap included with the PAC.
   c. A separate system-side power supply ("Module" or "MOD" power).
   d. A separate field-side power supply ("Sensor/Actuator" or "SA" power).
   e. I/O modules from a family of modules with EtherNet/IP architecture.
2. All system modules shall be designed to operate in:
   a. An industrial environment with an ambient temperature of 0°C to 60°C (32°F to 140°F) and with a relative humidity range of 5% to 95%, non-condensing.
   b. A free airflow environment (convection cooling only, no fans or other air moving devices shall be required).
3. All system modules, and local and remote chassis shall be designed and tested to operate in high electrical noise environments.
4. The system shall support up to 8 (or 16, 31) local expansion modules, along with remote I/O expansion via network.
5. Power shall begin at the PAC and pass across the local I/O module internal circuitry via power buses.
6. The manufacturer shall have available a variety of I/O modules, including digital input, digital output, analog output, isolated relay output, address reserve, universal analog input, and high-speed counter.

H. PAC

1. The programmable automation controller (PAC) shall be a self-contained unit and will be capable of providing control program execution, supporting remote and local programming, controlling all I/O scanning and inter-controller and peripheral communication and diagnostic functions.
2. 32 tasks (1000 programs per task). Interrupt mechanism shall adhere to IEC 61131-3 definition of pre-emptive multitasking. Tasks shall include:
   a. Continuous – 1 allowed.
   b. Periodic – Run via an interrupt at a user-defined interval in 1 µs increments from 0.1 ms to 2000 s.
   c. Event – Triggers include:
      i. Module input data change-of-state
      ii. Consumed tag trigger

iii. Event instruction
iv. Axis trigger
v. Motion event trigger

3. Network connections: 40 (or 55, 80) Ethernet/IP network nodes
4. The PAC shall be capable of sharing produced and consumed tags with other controllers on the same network.
   a. The PAC shall provide a means for fault handling.
5. The capability shall exist for a project to have a controller fault handler for overall project fault recovery.
6. The capability shall exist for a program to have its own fault routine for program fault recovery.
7. Programming instructions shall include the following:
   a. Relay-Type (bit)
   b. Counter and Timer
   c. Data Comparison (for example: Equal, Greater than or Equal, less than or Equal)
   d. Data Manipulation (for example: Copy, Move)
   e. Logical (for example: And, Not, Or)
   f. Integer and Floating-Point Math (for example: Add, Subtract, Multiply, Log 10)
   g. Advanced Math and Trigonometric Functions (for example Sine, Cosine, Tangent)
   h. Statistical
   i. Matrix and Array (for example: COP, CPS, FIFO)
   j. BCD Conversion
   k. Program Flow Control (for example: Jump, Subroutine)
   l. Application Specific (for example: Sequencer)
   m. Diagnostic
   n. Communication
   o. Proportional Integral and Derivative (PID)
   p. Block Read and Write
8. It shall be possible for users to create instructions to encapsulate code in a similar fashion to subroutines.
9. Once defined in a project, created instructions shall behave similarly to the built-in instructions already in the PAC.
10. Custom instruction logic can be created using Ladder Diagram, Structured Text, or Function Block Diagram.
11. The system must be capable of storing the following data:
    a. External Output Status
    b. External Input Status
    c. Timer Values
    d. Counter Values
    e. Boolean Values (0 or 1)
    f. Short Integer Numbers (-128 to 127)
    g. Integer Numbers (-32,768 to 32,767)
    h. Double Integer Numbers (-2,147,483,648 to 2,147,483,647)
    i. Floating Point Numbers to 8 significant digits (for 8+ digits, conversion to exponential form from ±1.1754944 E -38 to

±3.402823 E +38)

j. Long Integer Numbers (-9,223,372,036,854,775,808 to 9,223,372,036,854,775,807)

12. Internal Processor Status Information
    a. Data shall be distinguishable to the PAC by address and sub-element mnemonic.
    b. Management of the data into memory subsections shall be an automatic function of the PAC operating system.
13. Data can be displayed in ASCII, Binary, Octal, Hexadecimal, or Decimal.
14. Function-specific data such as PID, Axis, Axis Group or Message shall have dedicated displays available that annotate the meaning of specific control bits and words within them and allow for selective control where appropriate.
15. The PAC shall have an embedded Energy Storage Module (ESM) that provides enough power for the controller to write all program and variable data to internal nonvolatile memory during loss of power.
16. For clock support and backup of memory at power down, the PAC shall have:
17. A clock value in the form of a predefined tag, accessible via logic or remotely.
18. A capacitor-based ESM.
19. A memory card capable of storing current tag data in the state it was when the nonvolatile memory was last saved.
20. The PAC shall have dual Ethernet/IP ports that are configurable for Device Level Ring (DLR) or Dual IP modes.
21. The front of the PAC shall have:
    a. A USB port, 2.0 full-speed, Type B.
    b. Terminal connections for MOD and SA power.
22. Behind the door on the front of the PAC shall be:
    a. A slot securing a 2-GB Secure Digital (SD) non-volatile memory card. The PAC shall support replacement SD cards up to 32 GB.
    b. A mode switch with local positions for REMOTE, PROGRAM, and RUN. The local RUN mode shall enhance security by preventing unauthorized remote access to the controller.
    c. A reset button with two stages of reset –
        i. Stage 1 clears application program and memory but retains IP address and network settings.
        ii. Stage 2 clears all settings, including network and time synchronization.
23. The PAC shall support firmware updates.
24. The PAC shall provide diagnostic web pages that track controller, network, and backplane performance.
25. The PAC shall support integrated motion over the Ethernet/IP network for up to 20 (or 32) axes, including CIP, Virtual, and Consumed types.
26. The PAC shall have the ability to provide a master system clock and the IEEE 1588 PTP version 2 CIP Sync object to allow time synchronization, transport, and routing of the system clock to the control system and motion axes in a local chassis or on an Ethernet/IP network.

I. SECURITY

1. It shall be possible to determine if the configuration of a programmable automation controller (PAC) has been modified quickly, on the order of one second after the modification has been made.

2. It shall be possible to make this determination from another PAC or from personal computer-based software monitoring the PAC.
3. It shall be possible to configure the PAC as to what events constitute configuration changes. Examples include:
    a. Online edits modified the PAC program
    b. Firmware update attempted
    c. PAC mode changed
    d. Removable media inserted or removed
    e. Constant tag value changed
4. The PAC shall keep a log of its most recent configuration changes and expose the log for use by personal computer-based software.
5. The PAC shall allow the following features to be disabled programmatically:
    a. Scrolling LCD display messages
    b. HTTP server (Embedded webpage)
    c. Embedded Ethernet port
6. The PAC shall provide firmware security:
    a. The PAC shall be configurable to accept only firmware updates from authorized users.
    b. The PAC shall use digitally signed and encrypted firmware to guard against malicious or fraudulent firmware downloads.
    c. The PAC and associated project files shall be configurable to allow modification only by authorized users, and all communication paths to the PAC shall be configurable to restrict operations that modify the PAC program or firmware.
    d. The PAC shall allow individual tags, memory addresses, or variables to be configured by external applications according to each element's user-defined access level.
    e. These individual tags, memory addresses, or variables shall be configurable to be read/write, read only, or none.
    f. The PAC shall enforce these access levels at runtime.
7. The PAC shall allow individual tags, memory addresses, or variables to be configured as constants to prevent controller logic from changing an element's value.
8. Individual routines or custom instructions in the PAC shall be configurable to prevent modification or viewing by unauthorized individuals.
9. Custom instructions can be digitally signed so that their contents can be easily audited for unexpected changes.

J. MEMORY
1. The programmable automation controller (PAC) shall have 600 kB (or 1, 2, 3, 4, 5, 8, 10 MB) of user memory.
2. The program storage medium shall be a solid-state, non-volatile type.
3. The PAC shall include a 2-GB SD memory card to store the user program.
4. If the card is installed and a fault occurs, diagnostic data shall be automatically written to the card.
5. The PAC shall detect the presence of an SD card at power-up or if a card is inserted during controller operation.
6. The SD card shall be capable of storing all configuration data that is stored in nonvolatile memory, including the controller IP address.
7. The SD card shall be capable of storing the back-up program.

K. I/O CIRCUITRY

1. The system shall support up to 8 (or 16, 31) local expansion modules from its family of modules with Ethernet/IP architecture. The supplier shall configure each expansion module to the optimum requested packet interval (RPI) for the application.
2. Some I/O modules and other devices shall be capable of being added to the controller configuration while online and in the RUN mode.
3. Via the Ethernet/IP network, the system shall support remote I/O modules from its family of modules with Ethernet/IP architecture, along with those from:
4. Chassis-based families.
5. In-cabinet families.
6. On-machine families.

L. PROGRAMMING ENVIRONMENT
1. Programming shall be through the USB 2.0 port or through the Ethernet/IP network, using Studio 5000 Logix Designer Application Version 28.00.00 or later.
2. The programming software shall run on Windows Server 2008 R2, Windows Server 2012, Windows Server 2012 R2, Windows 7, and Windows 8, and the programming languages shall be:
   a. IEC 61131-3 compliant ladder diagram (LD).
   b. Structured text (ST).
   c. Function block diagram (FBD).
   d. Sequential function chart (SFC).

M. COMMUNICATION
1. The PAC shall have at a minimum:
2. USB 2.0, Type B port to support programming, configuration, firmware flash, and on-line edits at full speed (12 Mbps).
3. Ethernet/IP embedded switch and dual 10/100/1000 MB/s Ethernet/IP ports. The interface shall support:
   a. IEEE 802.3 Physical and Data Link Standard
   b. Common Industrial Protocol (CIP), the protocol that provides real-time I/O messaging and information/peer-to-peer messaging
   c. Standard TCP/IP and UDP/IP communication
   d. 10/100/1000 MB/s auto sensing and auto switching
   e. Standard Ethernet media
   f. Subnet masking
   g. BOOTP and DHCP support
   h. Manual configuration using specified software
   i. Programmable Automation Controller messaging to peer controllers and workstations
   j. I/O data, real-time interlocking and information
   k. Full duplex and auto-negotiate communication
   l. Built-in Web access to diagnostics
   m. I/O control
   n. Precision Time Protocol (CIP Sync, IEEE 1588)
4. The PAC shall support the following Ethernet/IP topologies:
   a. Device Level Ring (DLR)
   b. Star

c. Linear

5. The PAC shall use socket interface transactions and conventional communication over the Ethernet/IP network to communicate with Ethernet devices that do not support the Ethernet/IP application protocol.

N. POWER SUPPLY

1. System-side power shall be provided through the MOD Power connection with the following attributes:
   a. Voltage range – 18 to 32 VDC.
   b. Inrush – 850 mA for 125 ms.
   c. Maximum current rating – 9.55 A.
2. Field-side power shall be provided through the SA Power connection with the following attributes:
   a. Voltage range – 0 to 32 VDC; 0 to 240 VAC, 47 to 63 Hz (ATEX/IECEX, maximum 125 VAC).
   b. Pass-through voltage ranges – 0 to 32 VDC; 0 to 240 VAC, 47 to 63 Hz (ATEX/IECEX, maximum 125 VAC).
   c. Maximum current rating – 9.95 A (DC power); 9.975 A (AC power).

2.5 PROCESS CONTROL DESCRIPTION

A. This system will support the operation and monitoring of Chandler Water tower.

B. Elevated Tanks:

1. The elevated tank levels shall be monitored locally on a digital display and telemetered back to the Plant SCADA System via cell modem communications.
2. Tank level shall be trended and monitored for alarms. The level alarms shall be for High, High-High, Low and Low-Low levels. Set points will be generated for these four alarm points to allow the operator flexibility in alarm notifications.
3. Tank shall have a sail switch located in the down spout of the overflow pipe. When this sail switch is activated, a priority alarm shall be activated on the SCADA System.
4. Both the overhead maintenance door and the public access door shall have door switches connected back to the local PLC for monitoring on the SCADA System. When the door switch is activated, generate a low-level alarm that is time/date stamped.
5. Tank shall have a temperature transmitter to monitor the tank area temperature. The bottom portion of the tank shall be heated. Allow a low temperature alarm setpoint to be set on the SCADA System (default 42 degrees F.), if temperature is below this setpoint, a temperature alarm shall be activated.

PART 3 - EXECUTION

3.1 INSTALLATION

A. Installation shall be in compliance with all manufacturer requirements, instructions, and contract drawings, including:

1. Space surrounding the PAC to maintain adequate cooling.

2. Conditioning of space surrounding the PAC enclosure to maintain the manufacturer's ambient temperature and humidity ranges.
3. Accessibility of PAC diagnostic lights, communication ports, and memory modules – these components shall be free from obstructions at all times.

B. Control Panels
1. The supplier shall provide all required cables and connectors to interface with other control system equipment.
2. The supplier shall ensure that communication media, analog signals, and discrete I/O wiring are properly protected in accordance with manufacturer recommendations.

END OF SECTION